TESLA

CZECH REPUBLIC

ZAPALOVACÍ CÍVKY
IGNITION COILS
КАТУШКИ ЗАЖИГАНИЯ

IGNITION technology

2017 - 2018

ZÜNDSPULEN
BOBINE ACCENSIONE
ZAPALOVACÍ CÍVKY
IGNITION COILS
КАТУШКИ ЗАЖИГАНИЯ
BOBINES D'ALLUMAGE
BOBINAS DE ENCENDIDO

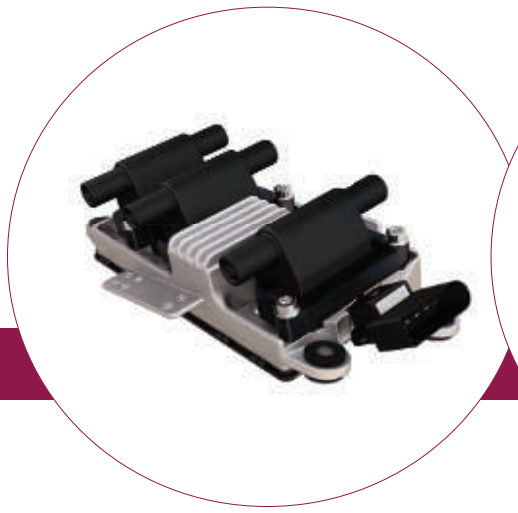

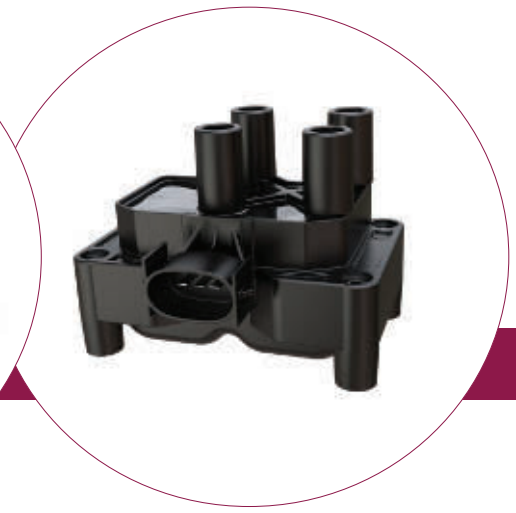

LPG CNG

www.tesla-blatna.cz

TecDoc

2 - 4	Assortment, marking, technical specification Ассортимент, обозначение, техническое описание Sortiment, značení, technický popis
5 - 156	Application of ignition coils, coil on plug boots Применение катушек зажигания, наконечников катушек зажигания Použití zapalovacích cívek, koncovek zapalovacích cívek
157 - 270	Ignition coils - summary incl. drawings Катушки зажигания - перечень, фотографии Zapalovací cívky - přehled s fotografiemi
271 - 289	Coil on plug boots - summary incl. drawings Наконечники катушек зажигания - перечень, фотографии Koncovky zapalovací cívky - přehled s fotografiemi
291 - 301	Ignition coils - cross references Катушки зажигания - таблицы сравнения Zapalovací cívky - srovnavací tabulky
302	Additional information Дополнительная информация Doplňující informace

Catalogue number of ignition coil / Номер катушки зажигания / Objednací číslo zapalovací cívky

C	L	0	0	1

Pencil (direct) coils
Индивидуальные катушки
Přímé (tužkové) cívky

CL405
Ford

CL510
Nissan

Rail coils
Блоки индивидуальных катушек
Zapalovací lišty

CL127
Citroen, Peugeot

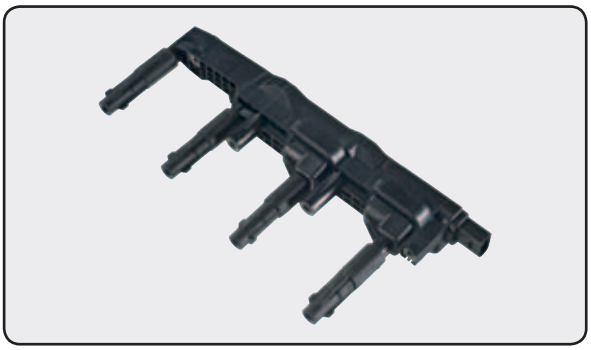

CL610
Mercedes

Coil & module
Катушка и модуль зажигания
Zapalovací cívka a modul zapalování

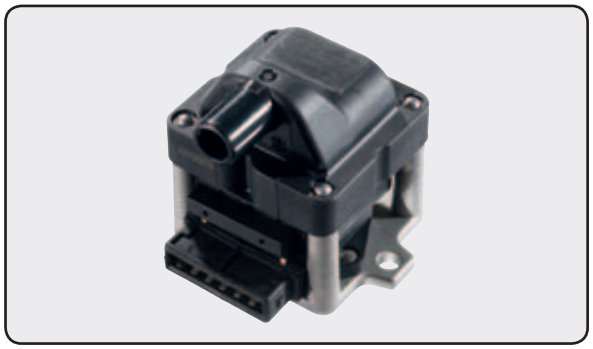

CL019
Seat, VW

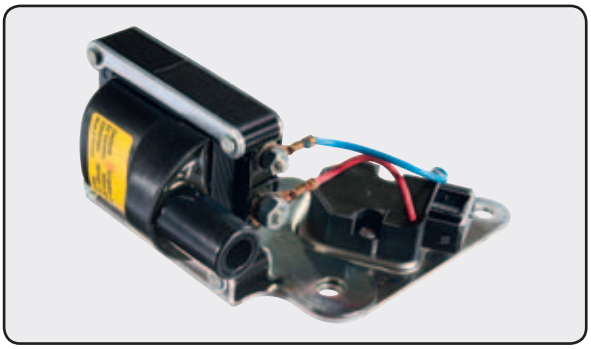

CL119
Volvo

Single outlet coils
Одновыводные катушки
Jednovývodové cívky

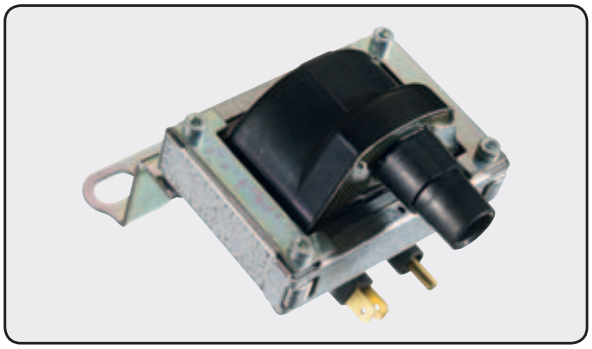

CL228
Opel

CL500
Honda, Rover

Multi-outlet coils
Двух-, Четырехвыводные катушки
Vícevývodové cívky

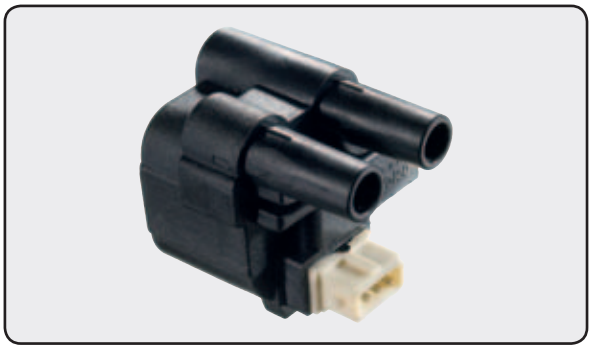

CL102
Renault

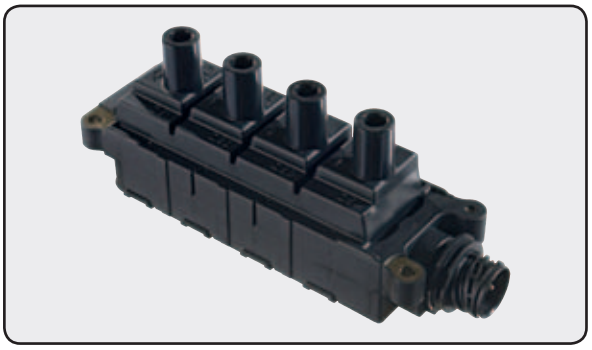

CL615
BMW

Cylindric coils
Цилиндрические катушки
Válcové cívky

CL012
Skoda

Catalogue number of coil on plug boot / Номер наконечника катушки зажигания / Objednací číslo koncovky zapalovací cívky

C	P	0	0	1

Coil on plug boots for pencil coils
Наконечники для индивидуальных катушек зажигания
Koncovky přímých (tužkových) cívek

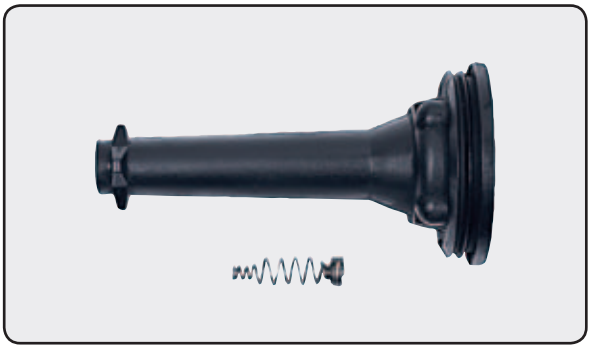

CP035
Ford, Volvo

(CL410)

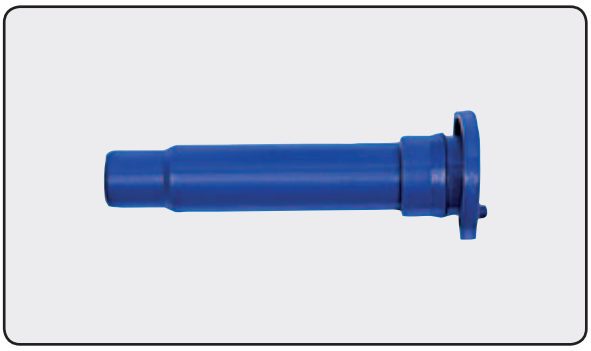

CP010
Kia

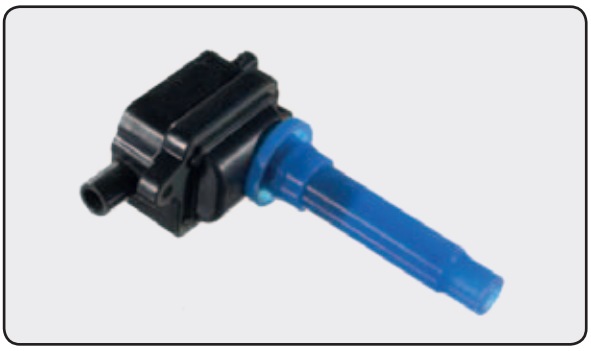

(CL505)

Coil on plug boots for rail coils
Наконечники для блоков индивидуальных катушек зажигания
Koncovky zapalovacích lišt

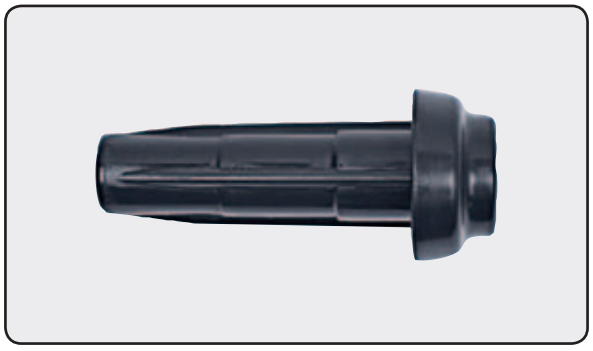

CP069
Citroen, Peugeot

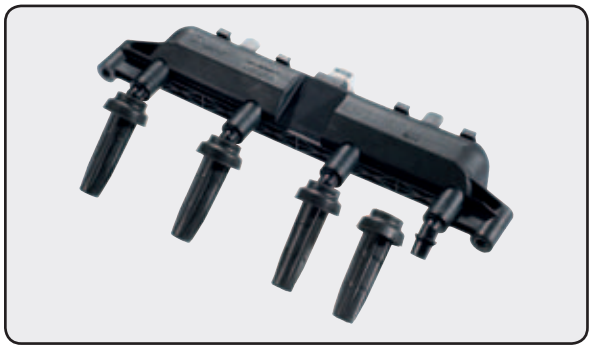

(CL111)

ACURA 7
ALFA ROMEO 7
AUDI 9
BMW 17
CADILLAC 24
CHEVROLET 24
CHRYSLER 25
CITROEN 26
DACIA 33
DAEWOO 34
DAIHATSU 35
FIAT 36
FORD 42
FSO 51
GAZ 51
GEELY 51
HONDA 51
HYUNDAI 54
INFINITI 58
JAGUAR 59
JEEP 59
KIA 60
LADA (VAZ) 63
LANCIA 64
LANDROVER 66
LEXUS 66
MAZDA 67
MERCEDES 70
MG 82
MINI 82
MITSUBISHI 83
NISSAN 86
OPEL (VAUXHALL) 90
PEUGEOT 101
PORSCHE 107
PROTON 108
RENAULT 108
ROVER 118
SAAB 120
SEAT 122
SKODA 126
SMART 130
SSANG YONG 130
SUBARU 130
SUZUKI 132
TAGAZ 134
TOYOTA 134
VOLVO 139
VW 144
ZAZ 156

Designations and abbreviations used / Использованные термины и сокращения / Použité výrazy a zkratky

MERCEDES

ignition coils

model	year	kW	cm³	cyl	engine	coil	pcs	boot	pcs	info
MERCEDES										
C-Class Coupe (C204)										
C 180 1.8	06.11 -	115	1796	4	M 271.820	**CL622**	4	CP039	4	pencil
C 250 1.8	06.11 -	150	1796	4	M 271.860	**CL622**	4	CP039	4	pencil
C 350 3.5	06.11 -	225	3498	6	M 276.957	**CL629**	6			pencil

model - car make and model specification (body design), engine capacity in l
марка и модель автомобиля (тип кузова), объём двигателя в литрах
značka a model automobilu (typ karoserie), objem motoru v l
year - year of production / год производства / rok výroby
kW - engine power (kW) / мощность двигателя (kW) / výkon motoru (kW)
cm³ - engine capacity (cm³) / объём двигателя (cm³) / objem motoru (cm³)
cyl - number of engine cylinders / к-во цилиндров двигателя / počet válců motoru
engine - type of engine / тип двигателя / typ motoru
coil - pcs - ignition coil and quantity for model / катушка зажигания и к-во для модели / zapalovací cívka a její počet pro daný model
boot - pcs - coil on plug boot and quantity for model / наконечник катушки зажигания и к-во для модели / koncovka zapalovací cívky a její počet pro daný model

cat - catalysator
carb - carburettor
T.S. - Twin Spark
Kompr. - Kompressor
SPI - single point injection/моновпрыск/jednobodový vstřik
MPI - multipoint injection/распределеный впрыск/vícebodový vstřik

info

a) additional information / дополнительная информация / doplňková informace:
- **Mot. No.**: engine No. / двигатель № / číslo motoru
- **engine code**: тип двигателя / typ motoru
- **with distributor**: система с распределителем зажигания / zapalovaní s rozdělovačem
- **without distributor**: система без распределителя зажигания / v systému zapalovaní se rozdělovač nepoužívá

b) coils description / описание катушек / popis cívek:
- **coil design**: various design / различные варианты катушки / odlišné provedení cívek
- **socket design**: прямоугольная, овальная розетка / odlišný tvar zásuvek
- **coil socket with 2 (3) pins**: разъем катушки с 2 (3) контактами / zásuvka cívky s 2 (3) kontakty
- **flat contact**: плоские контакты / ploché konektory
- **coil with (without) COP boot**: катушка с/без наконечника / cívka s koncovkou (bez koncovky)
- **coil built in distributor**: катушка интегрирована с распределителем / cívka je součástí rozdělovače
- **pencil / rail coil**: индивидуальная катушка / блок индивидуальных катушек / přímé cívky / zapalovací lišta

- **twin coil:**
  - двухвыводные катушки
  - cívka s dvěma výstupy

- **coil with (without) ignition cables:**
  - катушка в сборе с проводами/без проводов зажигания
  - cívka se zapalovacími kabely (bez kabelů)

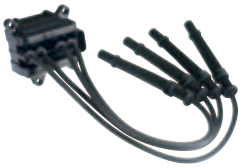

- **semidirect**:
  - combined ignition system
  - комбинированная система зажигания
  - kombinovaný zapalovací systém

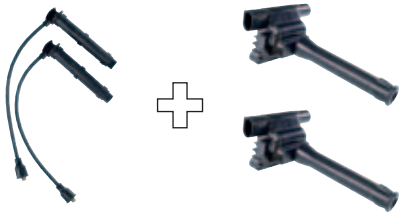

- **DIN (∅8,2), SAE, PIN, DIN ∅5 mm**:
  - type of connection: ignition lead set - coil (distributor)
  - способ присоединения: комплект проводов – катушка (распределитель)
  - způsob připojení: sada kabelů – cívka (rozdělovač)

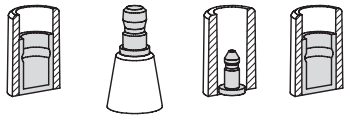

DIN ø8.2 SAE ø6.3 PIN ø4 DIN ø5

model	year	kW	cm³	cyl	engine	coil	pcs	boot	pcs	info
ACURA										
Integra CC										
1.6	01.85 - 12.90	74	1590	4	D16A1	**CL500**	1			
1.6 i	01.85 - 12.90	88	1590	4	D16A8	**CL500**	1			
Integra Coupe										
1.6	01.85 - 12.90	74	1590	4	D16A3	**CL500**	1			
1.6 i	01.85 - 12.90	88	1590	4	D16A8	**CL500**	1			
Integra Sedan										
1.6	01.85 - 12.90	74	1590	4	D16A3	**CL500**	1			
1.6 i	01.85 - 12.90	88	1590	4	D16A8	**CL500**	1			
ALFA ROMEO										
33 (907A)										
1.4 i.e.	06.91 - 09.94	65	1351	4	AR 30753	**CL300**	2			twin coil
1.4 i.e.	06.91 - 09.94	66	1351	4	AR 30753	**CL300**	2			twin coil
33 Sportwagon (907B)										
1.4 i.e.	06.91 - 09.94	65	1351	4	AR 30753	**CL300**	2			twin coil
1.4 i.e.	06.91 - 09.94	66	1351	4	AR 30753	**CL300**	2			twin coil
145 (930)										
1.4 i.e.	07.94 - 12.96	66	1351	4	AR 33501	**CL300**	2			twin coil
1.4 i.e. 16V T.S.	12.96 - 01.01	76	1370	4	AR 33503	**CL305**	2	CP036	2	semidirect / pencil / 1st coil
						CL306	2	CP036	2	semidirect / pencil / 2nd coil
1.6 i.e.	10.94 - 12.96	76	1596	4	AR 33201	**CL319**	1			
1.6 i.e. 16V T.S.	12.96 - 01.01	88	1598	4	AR 67601	**CL305**	2	CP036	2	semidirect / pencil / 1st coil
						CL306	2	CP036	2	semidirect / pencil / 2nd coil
1.7 i.e. 16V	10.94 - 12.96	95	1712	4	AR 33401	**CL319**	1			
1.8 i.e. 16V	03.98 - 01.01	106	1747	4	AR 32201	**CL305**	2	CP036	2	semidirect / pencil
1.8 i.e. 16V T.S.	12.96 - 12.98	103	1747	4	AR 67106	**CL306**	2	CP036	2	semidirect / pencil
2.0 16V Quadrifoglio	03.98 - 01.01	114	1970	4	AR 32301	**CL305**	2	CP036	2	semidirect / pencil
2.0 16V T.S.	10.95 - 01.01	110	1970	4	AR 67204	**CL306**	2	CP036	2	semidirect / pencil
146 (930)										
1.4 i.e.	12.94 - 12.96	66	1351	4	AR 33501	**CL300**	2			twin coil
1.4 i.e. 16V T.S.	11.96 - 01.01	76	1370	4	AR 33503	**CL305**	2	CP036	2	semidirect / pencil / 1st coil
						CL306	2	CP036	2	semidirect / pencil / 2nd coil
1.6 i.e.	12.94 - 12.96	76	1596	4	AR 33201	**CL319**	1			
1.6 i.e. 16V T.S.	11.96 - 01.01	88	1598	4	AR 67601	**CL305**	2	CP036	2	semidirect / pencil / 1st coil
						CL306	2	CP036	2	semidirect / pencil / 2nd coil
1.7 i.e. 16V	12.94 - 12.96	95	1712	4	AR 33401	**CL319**	1			
1.8 i.e. 16V T.S.	11.96 - 01.01	103	1747	4	AR 67106	**CL306**	2	CP036	2	semidirect / pencil
1.8 i.e. 16V T.S.	03.98 - 01.01	106	1747	4	AR 32201	**CL305**	2	CP036	2	semidirect / pencil
2.0 16V Quadrifoglio	03.98 - 01.01	114	1970	4	AR 32301	**CL305**	2	CP036	2	semidirect / pencil
2.0 16V T.S.	10.95 - 01.01	110	1970	4	AR 67204	**CL306**	2	CP036	2	semidirect / pencil
147 (937)										
1.6 16V T.S.	01.01 - 03.10	88	1598	4	AR 32104	**CL307**	2	CP036	2	semidirect / pencil
1.6 16V T.S. Eco	01.01 - 03.10	77	1598	4	AR 37203	**CL307**	2	CP036	2	semidirect / pencil
2.0 16V T.S.	01.01 - 03.10	110	1970	4	AR 32310	**CL307**	2	CP036	2	semidirect / pencil
3.2 GTA	02.03 - 03.10	184	3179	6	932 A.000	**CL320**	6			pencil
155 (167)										
1.6 16V T.S.	05.96 - 12.97	88	1598	4	AR 67601	**CL306**	2	CP036	2	semidirect / pencil
1.7 T.S.	04.93 - 04.96	83	1748	4	AR 67103	**CL302**	1			
1.7 T.S.	04.93 - 04.96	85	1748	4	AR 67105	**CL302**	1			
1.7 T.S. 16V	05.96 - 12.97	103	1747	4	AR 67106	**CL302**	1			coil 4xPIN
						CL306	2	CP036	2	semidirect / pencil
1.8 T.S.	02.92 - 12.97	77	1756	4	AR 67402	**CL302**	1			
1.8 T.S.	02.92 - 06.93	95	1773	4	AR 67101	**CL302**	1			
1.8 T.S. Sport	01.92 - 12.96	93	1773	4	AR 67101/AR 67102	**CL302**	1			
2.0 16V Turbo Q4	01.92 - 12.97	137	1995	4	AR 67203	**CL300**	2			twin coil
2.0 16V Turbo Q4	01.92 - 12.97	140	1995	4	AR 67203	**CL300**	2			twin coil
2.0 T.S.	02.92 - 02.95	104	1995	4	AR 67202	**CL302**	1			
2.0 T.S.	02.92 - 04.93	106	1995	4	AR 67201	**CL302**	1			
2.0 T.S. 16V	03.95 - 12.97	110	1970	4	AR 67299/AR 67204	**CL306**	2	CP036	2	semidirect / pencil
156 (932)										
1.6 16V T.S.	09.97 - 09.05	88	1598	4	AR 32102/AR 67601	**CL306**	2	CP036	2	semidirect / pencil / engine code
				4	AR 32103/AR 32104	**CL307**	2	CP036	2	semidirect / pencil / engine code
1.8 16V T.S.	09.97 - 10.00	106	1747	4	AR 32201	**CL305**	2	CP036	2	semidirect / pencil
1.8 16V T.S.	10.00 - 09.05	103	1747	4	AR 32205	**CL307**	2	CP036	2	semidirect / pencil
2.0 16V T.S.	09.97 - 10.00	114	1970	4	AR 32301	**CL305**	2	CP036	2	semidirect / pencil
2.0 16V T.S.	10.00 - 03.02	110	1970	4	AR 32310	**CL307**	2	CP036	2	semidirect / pencil
2.0 JTS	03.02 - 09.05	122	1970	4	937 A1.000	**CL321**	4	CP070	4	pencil
2.5 V6 24V	09.97 - 12.01	140	2492	6	AR 32401/AR 32402	**CL320**	6			pencil
2.5 V6 24V	10.00 - 09.05	141	2492	6	AR 32405	**CL320**	6			pencil
3.2 GTA	03.02 - 09.05	184	3179	6	932 A.000	**CL320**	6			pencil

ALFA ROMEO ▶

model	year	kW	cm³	cyl	engine	coil	pcs	boot	pcs	info
ALFA ROMEO										
156 Sportwagon (932)										
1.6 16V T.S.	05.00 - 05.06	88	1598	4	AR 32103/AR 32104	**CL306**	2	CP036	2	semidirect / pencil / 1st coil
						CL307	2	CP036	2	semidirect / pencil / 2nd coil
1.8 16V T.S.	05.00 - 10.00	106	1747	4	AR 32201	**CL307**	2	CP036	2	semidirect / pencil
1.8 16V T.S.	10.00 - 05.06	103	1747	4	AR 32205	**CL307**	2	CP036	2	semidirect / pencil
2.0 16V T.S.	05.00 - 06.02	114	1970	4	AR 32301	**CL307**	2	CP036	2	semidirect / pencil
2.0 16V T.S.	10.00 - 03.02	110	1970	4	AR 32310	**CL307**	2	CP036	2	semidirect / pencil
2.0 JTS	03.02 - 05.06	122	1970	4	937 A1.000	**CL321**	4	CP070	4	pencil
2.5 V6 24V	05.00 - 08.03	140	2492	6	AR 32401	**CL320**	6			pencil
2.5 V6 24V	10.00 - 05.06	141	2492	6	AR 32405	**CL320**	6			pencil
3.2 GTA	03.02 - 05.06	184	3179	6	932 A.000	**CL320**	6			pencil
159 (939)										
1.8 MPI	03.07 - 11.11	103	1796	4	939 A4.000	**CL221**	1	CP062	4	rail coil
1.8 TBi	05.09 - 11.11	147	1742	4	939 B1.000	**CL221**	1	CP062	4	rail coil
1.9 JTS	09.05 - 11.11	118	1859	4	939 A6.000	**CL321**	4	CP070	4	pencil
2.2 JTS	09.05 - 11.11	136	2198	4	939 A5.000	**CL226**	1			rail coil
159 Sportwagon (939)										
1.8 MPI	03.07 - 11.11	103	1796	4	939 A4.000	**CL221**	1	CP062	4	rail coil
1.8 TBi	05.09 - 11.11	147	1742	4	939 B1.000	**CL221**	1	CP062	4	rail coil
1.9 JTS	03.06 - 11.11	118	1859	4	939 A6.000	**CL321**	4	CP070	4	pencil
2.2 JTS	03.06 - 11.11	136	2198	4	939 A5.000	**CL226**	1			rail coil
164 (164)										
2.0 T.S.	09.92 - 09.98	106	1995	4	AR 64103	**CL302**	1			
3.0	04.93 - 02.95	168	2959	6	AR 64304	**CL320**	6			pencil
3.0 24V	09.92 - 09.98	155	2959	6	AR 66301/AR 66302/AR 64306	**CL320**	6			pencil
3.0 24V Q4	02.94 - 09.98	170	2959	6	AR 64308/AR 64307	**CL320**	6			pencil
3.0 24V QV	09.92 - 09.98	171	2959	6	AR 64304	**CL320**	6			pencil
3.0 24V QV Allrad	11.92 - 10.97	171	2959	6	AR 64307/AR 64304	**CL320**	6			pencil
166 (936)										
2.0 T.S.	09.98 - 10.00	114	1970	4	AR 34103	**CL305**	2	CP036	2	semidirect / pencil
2.0 T.S.	10.00 - 06.07	110	1970	4	AR 36301	**CL307**	2	CP036	2	semidirect / pencil
3.0 V6 24V	09.98 - 10.00	140	2492	6	AR 34201	**CL320**	6			pencil
3.0 V6 24V	09.98 - 10.00	166	2959	6	AR 34301/AR 34302	**CL320**	6			pencil
3.0 V6 24V	10.00 - 06.07	138	2492	6	AR 36201	**CL320**	6			pencil
3.0 V6 24V	10.00 - 06.07	162	2959	6	AR 36101	**CL320**	6			pencil
3.2 V6 24V	10.03 - 06.07	176	3179	6	936 A.000	**CL320**	6			pencil
Brera										
2.2 JTS	01.06 -	136	2198	4	939 A5.000	**CL226**	1			rail coil
Giulietta (940)										
1.4 TB	04.10 -	88	1368	4	940 B7.000/198 A4.000	**CL323**	4			pencil
1.4 TB	04.10 -	120	1368	4	955 A8.000	**CL326**	4			pencil
1.4 TB	04.10 -	125	1368	4	940 A2.000	**CL326**	4			pencil
1.4 TB	09.14 -	110	1368	4	940 A2.000	**CL323**	4			pencil
GT (937)										
1.8 TS	11.03 - 09.10	103	1747	4	AR 32205	**CL307**	2	CP036	2	semidirect / pencil
2.0 JTS	12.06 - 09.10	119	1970	4	932 A2.000	**CL321**	4	CP070	4	pencil
2.0 JTS	11.03 - 09.10	121	1970	4	932 A2.000/937 A1.000	**CL321**	4	CP070	4	pencil
3.2 GTA	11.03 - 09.10	176	3179	6	936 A.000	**CL320**	6			pencil
GTV (916C_)										
1.8 16V	05.98 - 10.05	106	1747	4	AR 32201	**CL305**	2	CP036	2	semidirect / pencil
2.0 JTS	04.03 - 10.05	121	1970	4	937 A1.000	**CL321**	4	CP070	4	pencil
2.0 T.S. 16V	06.95 - 10.05	110	1970	4	AR 16201	**CL305**	2	CP036	2	semidirect / pencil / engine code
				4	AR 32310	**CL307**	2	CP036	2	semidirect / pencil / engine code
2.0 T.S. 16V	05.98 - 08.00	114	1970	4	AR 32301	**CL305**	2	CP036	2	semidirect / pencil
3.0 V6 24V	10.96 - 10.00	162	2959	6	AR 16102	**CL320**	6			pencil
3.0 V6 24V	10.00 - 10.05	160	2959	6	AR 16105	**CL320**	6			pencil
3.2 V6 24V	04.03 - 10.05	176	3179	6	936 A6.000	**CL320**	6			pencil
Mito (955)										
0.9 TwinAir	07.11 -	63	875	2	312 A2.000	**CL325**	2			pencil
1.4	05.11 -	51	1368	4	955 A9.000	**CL309**	1			
1.4	03.11 -	57	1368	4	955 A1.000	**CL310**	4	CP072	4	pencil
1.4	09.08 -	58	1368	4	955 A1.000	**CL310**	4	CP072	4	pencil
1.4	09.08 -	70	1368	4	199 A6.000	**CL310**	4	CP072	4	pencil
1.4 BiFuel	07.11 -	88	1368	4	198 A4.000	**CL323**	4			pencil
1.4 MultiAir	08.10 -	77	1368	4	955 A6.000	**CL324**	4			pencil
1.4 TJet	09.08 -	88	1368	4	198 A4.000	**CL323**	4			pencil
1.4 TJet	09.08 -	110	1368	4	198 A1.000	**CL326**	4			pencil
1.4 TJet	09.08 -	114	1368	4	199 A8.000	**CL323**	4			pencil
1.4 Turbo MultiAir	10.09 -	99	1368	4	955 A2.000/955 A7.000	**CL326**	4			pencil
1.4 Turbo MultiAir	10.09 -	120	1368	4	955 A8.000	**CL326**	4			pencil
1.4 Turbo MultiAir	10.09 -	125	1368	4	940 A2.000	**CL326**	4			pencil

model	year	kW	cm³	cyl	engine	coil	pcs	boot	pcs	info
ALFA ROMEO										
Spider (916S_)										
1.8 16V	05.98 - 04.05	106	1747	4	AR 32201	**CL305**	2	CP036	2	semidirect / pencil
2.0 JTS	04.03 - 04.05	121	1970	4	937 A1.000	**CL321**	4	CP070	4	pencil
2.0 T.S. 16V	06.95 - 04.05	110	1970	4	AR 16201	**CL305**	2	CP036	2	semidirect / pencil / engine code
				4	AR 16201	**CL306**	2	CP036	2	semidirect / pencil / engine code
				4	AR 32310	**CL307**	2	CP036	2	semidirect / pencil / engine code
2.0 T.S. 16V	05.98 - 08.00	114	1970	4	AR 32301	**CL305**	2	CP036	2	semidirect / pencil
3.0 V6	09.94 - 08.00	160	2959	6	AR 16105	**CL320**	6			pencil
3.2 V6	04.03 - 04.05	176	3179	6	936 A6.000	**CL320**	6			pencil
Spider (939)										
2.2 JTS	09.06 -	136	2198	4	939 A5.000	**CL226**	1			rail coil
AUDI										
80 (8C, B4)										
1.6	09.91 - 12.94	52	1595	4	ABM	**CL001**	1			
2.0	09.91 - 12.94	66	1984	4	ABT	**CL001**	1			
2.0 E	09.91 - 12.94	85	1984	4	ABK	**CL001**	1			
2.0 E quattro	09.91 - 12.94	85	1984	4	ABK	**CL001**	1			
2.6	07.92 - 12.94	110	2598	6	ABC	**CL006**	1			
2.6 quattro	06.92 - 12.94	110	2598	6	ABC	**CL006**	1			
2.8	09.91 - 12.94	128	2771	6	AAH	**CL006**	1			
2.8 quattro	09.91 - 12.94	128	2771	6	AAH	**CL006**	1			
S2 quattro	02.93 - 12.94	169	2226	5	ABY	**CL033**	5	CP002	5	pencil
80 Avant (8C, B4)										
2.0	07.92 - 01.96	66	1984	4	ABT	**CL001**	1			
2.0 E	07.92 - 01.96	85	1984	4	ABK	**CL001**	1			connector with 3 pins
						CL019	1			connector with 6 pins
2.6	07.92 - 01.96	110	2598	6	ABC	**CL006**	1			
2.6 quattro	07.92 - 07.95	110	2598	6	ABC	**CL006**	1			
2.8	09.91 - 01.96	128	2771	6	AAH	**CL006**	1			
2.8 quattro	08.92 - 07.95	128	2771	6	AAH	**CL006**	1			
RS2 quattro	03.94 - 05.95	232	2226	5	ADU	**CL033**	5	CP002	5	pencil
S2 quattro	02.93 - 07.95	169	2226	5	ABY	**CL033**	5	CP002	5	pencil
100 (4A, C4)										
2.0	12.90 - 06.94	74	1984	4	AAE	**CL001**	1			
2.6	07.93 - 06.94	102	2598	6	ACZ	**CL006**	1			
2.6	03.92 - 06.94	110	2598	6	ABC	**CL006**	1			
2.6 quattro	04.92 - 06.94	110	2598	6	ABC	**CL006**	1			
2.6 E quattro	08.93 - 07.94	102	2598	6	ACZ	**CL006**	1			
2.8 E	12.90 - 06.94	128	2771	6	AAH	**CL006**	1			
2.8 E quattro	12.90 - 06.94	128	2771	6	AAH	**CL006**	1			
S4 Turbo quattro	08.91 - 06.94	169	2226	5	AAN	**CL033**	5	CP002	5	pencil
100 Avant (4A, C4)										
2.0 E	09.91 - 06.94	74	1984	4	AAE	**CL001**	1			
2.6	07.93 - 06.94	102	2598	6	ACZ	**CL006**	1			
2.6	03.92 - 06.94	110	2598	6	ABC	**CL006**	1			
2.6 quattro	07.92 - 06.94	110	2598	6	ABC	**CL006**	1			
2.6 E quattro	08.93 - 07.94	102	2598	6	ACZ	**CL006**	1			
2.8 E	09.91 - 06.94	128	2771	6	AAH	**CL006**	1			
2.8 E quattro	09.91 - 06.94	128	2771	6	AAH	**CL006**	1			
S4 Turbo quattro	09.91 - 06.94	169	2226	5	AAN	**CL033**	5	CP002	5	pencil
A1 (8X1, 8XF)										
1.0 TFSI	03.15 -	70	999	3	CHZB	**CL031**	3			pencil
1.2 TFSI	05.10 -	63	1197	4	CBZA	**CL002**	1			
1.4 TFSI	05.10 -	90	1390	4	CNVA/CAXA	**CL003**	4			pencil
1.4 TFSI	11.14 -	92	1395	4	CZCA	**CL031**	4			pencil
1.4 TFSI	04.12 -	103	1395	4	CPTA	**CL031**	4			pencil
1.4 TFSI	11.14 -	110	1395	4	CZEA	**CL031**	4			pencil
1.4 TFSI	01.11 -	136	1390	4	CTHG/CTJA/CAVG	**CL003**	4			pencil
1.8 TFSI	02.15 -	141	1798	4	DAJB	**CL032**	4			pencil
2.0 TFSI quattro	03.12 -	188	1984	4	CDLH	**CL011**	4			pencil
A1 Sportback (8XA, 8XK)										
1.0 TFSI	03.15 -	70	999	3	CHZB	**CL031**	3			pencil
1.2 TFSI	01.12 -	63	1197	4	CBZA	**CL002**	1			
1.4 TFSI	11.11 -	90	1390	4	CNVA/CAXA	**CL003**	4			pencil
1.4 TFSI	11.14 -	92	1395	4	CZCA/CZDB	**CL031**	4			pencil
1.4 TFSI	04.12 -	103	1395	4	CPTA	**CL031**	4			pencil
1.4 TFSI	11.14 -	110	1395	4	CZEA	**CL031**	4			pencil
1.8 TFSI	02.15 -	141	1798	4	DAJB	**CL032**	4			pencil
A2 (8Z0)										
1.4	02.00 - 08.05	55	1390	4	AUA	**CL002**	1			coil 4xPIN / engine code
				4	BBY	**CL003**	4			pencil / engine code
1.6 FSI	05.02 - 08.05	81	1598	4	BAD	**CL003**	4			pencil

AUDI ▶

model	year	kW	cm³	cyl	engine	coil	pcs	boot	pcs	info
AUDI										
A3 (8L1)										
1.6	09.96 - 05.03	74	1595	4	AKL/APF/AEH	**CL002**	1			
1.6	08.00 - 05.03	75	1595	4	AVU/BFQ	**CL002**	1			
1.8	09.96 - 05.03	92	1781	4	AGN/APG	**CL002**	1			
1.8 T	12.96 - 05.03	110	1781	4	ARZ/AQA/AGU/AUM	**CL014**	4			pencil
1.8 T	12.98 - 05.03	132	1781	4	AJQ/APP	**CL005**	4			pencil / engine code
				4	ARY/AUQ	**CL014**	4			pencil / engine code
1.8 T quattro	12.96 - 05.03	110	1781	4	AGU	**CL004**	4	CP001	4	pencil / engine code
	12.96 - 07.98	110		4	ARX	**CL005**	4			year / pencil / engine code
	08.98 - 04.01	110		4	AQA	**CL014**	4			year / pencil / engine code
1.8 T quattro	10.98 - 05.03	132	1781	4	AJQ/ARY	**CL014**	4			pencil
S3 quattro 1.8	03.99 - 04.02	154	1781	4	AMK/APY	**CL005**	4			pencil
S3 quattro 1.8	10.01 - 05.03	165	1781	4	BAM	**CL005**	4			pencil
A3 (8P1)										
1.2 TSI	04.10 - 08.12	77	1197	4	CBZB	**CL002**	1			
1.4 TFSI	09.07 - 08.12	92	1390	4	CMSA/CAXC	**CL003**	4			pencil
1.6	05.03 - 08.12	75	1595	4	BGU	**CL002**	1			
1.6 FSI	08.03 - 09.07	85	1598	4	BLF/BLP/BAG	**CL003**	4			pencil
1.8 TFSI	11.06 - 08.12	118	1798	4	BZB/CDAA/BYT	**CL011**	4			pencil
1.8 TFSI quattro	07.08 - 08.12	118	1798	4	CDAA	**CL011**	4			pencil
2.0 FSI	05.03 - 06.08	110	1984	4	BLX/BLY/BMB/AXW/BVZ/BVY	**CL011**	4			pencil
2.0 TFSI	09.04 - 08.12	147	1984	4	BWA/AXX/CAWB	**CL011**	4			pencil
2.0 TFSI quattro	09.04 - 08.12	147	1984	4	BWA/AXX	**CL011**	4			pencil
3.2 V6 quattro	07.03 - 05.09	184	3189	6	BDB/BMJ/BUB	**CL016**	6			pencil
S3 quattro	11.06 - 08.12	195	1984	4	BHZ/CDLA	**CL011**	4			pencil
A3 (8V1)										
1.2 TFSI	02.13 -	77	1197	4	CJZA	**CL031**	4			pencil
1.2 TFSI	05.14 -	81	1197	4	CYVB	**CL031**	4			pencil
1.4 TFSI	04.12 -	90	1395	4	CMBA/CXSA	**CL031**	4			pencil
1.4 TFSI	05.14 -	92	1395	4	CXSB/CZCA	**CL031**	4			pencil
1.4 TFSI	03.13 -	103	1395	4	CPTA	**CL031**	4			pencil
1.4 TFSI	05.14 -	110	1395	4	CZEA	**CL031**	4			pencil
1.8 TFSI	04.12 -	132	1798	4	CJSA	**CL032**	4			pencil
1.8 TFSI quattro	08.12 -	132	1798	4	CJSB	**CL032**	4			pencil
S3 quattro 2.0	02.13 -	206	1984	4	CJXB	**CL032**	4			pencil
S3 quattro 2.0	11.12 -	221	1984	4	CJXC	**CL032**	4			pencil
S3 quattro 2.0	05.14 -	210	1984	4	CJXF	**CL032**	4			pencil
A3 Cabriolet (8P7)										
1.2 TFSI	03.10 - 05.13	77	1197	4	CBZB	**CL002**	1			
1.4 TFSI	02.11 - 05.13	92	1390	4	CAXC	**CL003**	4			pencil
1.6	09.08 - 05.10	75	1595	4	BSE	**CL002**	1			
1.8 TFSI	04.08 - 05.13	118	1798	4	BZB/CDAA	**CL011**	4			pencil
2.0 TFSI	04.08 - 05.13	147	1984	4	CCZA/CAWB	**CL011**	4			pencil
A3 Cabriolet (8V7)										
1.4 TFSI	10.13 -	103	1395	4	CPTA	**CL031**	4			pencil
1.4 TFSI	05.14 -	110	1395	4	CZEA	**CL031**	4			pencil
1.8 TFSI	05.14 -	125	1798	4	CNSB	**CL032**	4			pencil
1.8 TFSI quattro	03.14 -	132	1798	4	CJSB	**CL032**	4			pencil
S3 quattro 2.0	03.14 -	210	1984	4	CJXF	**CL032**	4			pencil
A3 Sedan (8VS)										
1.2 TFSI	05.14 -	81	1197	4	CYVB	**CL031**	4			pencil
1.4 TFSI	05.13 -	103	1395	4	CPTA	**CL031**	4			pencil
1.4 TFSI	05.14 -	110	1395	4	CZEA	**CL031**	4			pencil
1.8 TFSI	05.13 -	132	1798	4	CJSB/CJSA	**CL032**	4			pencil
1.8 TFSI quattro	11.13 -	132	1798	4	CJSB	**CL032**	4			pencil
S3 quattro 2.0	05.14 -	210	1984	4	CJXF	**CL032**	4			pencil
A3 Sportback (8PA)										
1.2 TSI	04.10 - 03.13	77	1197	4	CBZB	**CL002**	1			
1.4 TFSI	09.07 - 03.13	92	1390	4	CMSA/CAXC	**CL003**	4			pencil
1.6	09.04 - 03.13	75	1595	4	BGU	**CL002**	1			
1.6 FSI	09.04 - 09.07	85	1598	4	BLF/BLP	**CL003**	4			pencil
1.8 TFSI	11.06 - 03.13	118	1798	4	BZB/CDAA/BYT	**CL011**	4			pencil
1.8 TFSI quattro	07.08 - 03.13	118	1798	4	CDAA	**CL011**	4			pencil
2.0 FSI	09.04 - 06.08	110	1984	4	BLX/BLY/BMB/AXW/BVZ/BVY	**CL011**	4			pencil
2.0 TFSI	09.04 - 03.13	147	1984	4	BWA/AXX/CAWB	**CL011**	4			pencil
2.0 TFSI quattro	09.04 - 03.13	147	1984	4	BWA/AXX	**CL011**	4			pencil
3.2 V6 quattro	09.04 - 05.09	184	3189	6	BMJ/BUB	**CL016**	6			pencil
RS3 quattro	01.11 - 12.12	250	2480	5	CEPA	**CL011**	5			pencil
S3 quattro 2.0	06.08 - 03.13	195	1984	4	BHZ/CDLA	**CL011**	4			pencil
S3 quattro 2.0	07.08 - 03.13	188	1984	4	CDLC	**CL011**	4			pencil
A3 Sportback (8VA)										
1.2 TFSI	05.13 -	77	1197	4	CJZA	**CL031**	4			pencil

AUDI A3 Sportback (8VA) ▶

model	year	kW	cm³	cyl	engine	coil	pcs	boot	pcs	info
AUDI										
A3 Sportback (8VA)										
1.2 TFSI	05.14 -	81	1197	4	CYVB	**CL031**	4			pencil
1.4 TFSI	09.12 -	90	1395	4	CMBA/CXSA	**CL031**	4			pencil
1.4 TFSI	05.14 -	92	1395	4	CXSB/CZCA	**CL031**	4			pencil
1.4 TFSI	03.13 -	103	1395	4	CPTA	**CL031**	4			pencil
1.4 TFSI	05.14 -	110	1395	4	CZEA	**CL031**	4			pencil
1.4 TFSI e-tron	05.14 -	110	1395	4	CUKB/CXUA	**CL031**	4			pencil
1.8 TFSI	09.12 -	132	1798	4	CJSB/CJSA	**CL032**	4			pencil
1.8 TFSI quattro	05.13 -	132	1798	4	CJSB	**CL032**	4			pencil
RS3 quattro	03.15 -	270	2480	5		**CL011**	5			pencil
S3 quattro 2.0	05.13 -	206	1984	4	CJXB	**CL032**	4			pencil
S3 quattro 2.0	05.14 -	210	1984	4	CJXF	**CL032**	4			pencil
S3 quattro 2.0	11.12 -	221	1984	4	CJXC	**CL032**	4			pencil
A4 (8D2, B5)										
1.6	11.94 - 10.00	74	1595	4	AHL/ARM/ANA	**CL002**	1			
1.6	07.00 - 11.00	75	1595	4	ALZ	**CL002**	1			
1.8	01.95 - 11.00	92	1781	4	AVV/ADR/APT/ARG	**CL028**	1			semidirect / pencil / twin coil
1.8 quattro	01.95 - 11.00	92	1781	4	ADR/APT/ARG	**CL028**	1			semidirect / pencil / twin coil
1.8 T	01.95 - 11.00	110	1781	4	ARK/AEB/ANB/APU	**CL004**	4	CP001	4	pencil / engine code
				4	AWT	**CL005**	4			pencil / engine code
1.8 T	12.97 - 11.00	132	1781	4	AJL	**CL004**	4	CP001	4	pencil
1.8 T quattro	01.95 - 11.00	110	1781	4	ARK/AEB/ANB/APU	**CL004**	4	CP001	4	pencil / engine code
				4	AWT	**CL005**	4			pencil / engine code
1.8 T quattro	12.97 - 11.00	132	1781	4	AJL	**CL004**	4	CP001	4	pencil
2.4	03.97 - 11.00	121	2393	6	AML/ARJ/ALF/AGA/APS	**CL006**	1			
2.4	08.97 - 11.00	120	2393	6	AMM/APZ/AJG	**CL006**	1			
2.4 quattro	03.97 - 11.00	121	2393	6	AML/ARJ/ALF/AGA/APS	**CL006**	1			
2.4 quattro	08.97 - 11.00	120	2393	6	APZ	**CL006**	1			
2.6	01.95 - 07.98	110	2598	6	ABC	**CL006**	1			year
	01.95 - 11.00	110	2598	6	ABC	**CL026**	1			year
2.6 quattro	01.95 - 07.98	110	2598	6	ABC	**CL006**	1			year
	01.95 - 11.00	110	2598	6	ABC	**CL026**	1			year
2.8	09.95 - 07.97	128	2771	6	AAH	**CL026**	1			
2.8	10.96 - 11.00	142	2771	6	APR/ACK/ALG/AHA/AQD/AMX	**CL006**	1			
2.8 quattro	01.95 - 07.97	128	2771	6	AAH	**CL026**	1			
2.8 quattro	10.96 - 08.01	142	2771	6	APR/ACK/ALG/AHA/AQD/AMX	**CL006**	1			
S4 quattro 2.7	09.97 - 09.01	195	2671	6	AGB/AZB	**CL004**	6	CP001	6	pencil
A4 (8E2, B6)										
1.6	11.00 - 12.04	75	1595	4	ALZ	**CL002**	1			
1.8 T	11.00 - 07.02	110	1781	4	AVJ	**CL005**	4			pencil
1.8 T	07.02 - 12.04	120	1781	4	BFB	**CL005**	4			pencil
1.8 T	11.02 - 12.04	140	1781	4	BEX	**CL005**	4			pencil
1.8 T quattro	11.00 - 07.02	110	1781	4	AVJ	**CL005**	4			pencil
1.8 T quattro	07.02 - 12.04	120	1781	4	BFB	**CL005**	4			pencil
1.8 T quattro	11.02 - 12.04	140	1781	4	BEX	**CL005**	4			pencil
2.0	11.00 - 12.04	96	1984	4	ALT	**CL034**	4			pencil
2.0 FSI	07.02 - 12.04	110	1984	4	AWA	**CL015**	4			pencil
2.4	09.01 - 12.04	125	2393	6	BDV	**CL006**	1			
2.4	09.01 - 12.04	120	2393	6	AMM	**CL006**	1			
3.0	11.00 - 12.04	162	2976	6	ASN/AVK	**CL034**	6			pencil
3.0	04.01 - 12.04	160	2976	6	BBJ	**CL034**	6			pencil
3.0 quattro	11.00 - 12.04	162	2976	6	ASN/AVK	**CL034**	6			pencil
3.0 quattro	04.01 - 12.04	160	2976	6	BBJ	**CL034**	6			pencil
S4 quattro	03.03 - 12.04	253	4163	8	BBK	**CL029**	8			pencil
A4 (8EC, B7)										
1.6	11.04 - 06.08	75	1595	4	ALZ	**CL002**	1			
1.8 T	11.04 - 06.08	120	1781	4	BFB	**CL005**	4			pencil
1.8 T quattro	11.04 - 06.08	120	1781	4	BFB	**CL005**	4			pencil
2.0	11.04 - 06.08	96	1984	4	ALT	**CL005**	4			pencil
2.0 TFSI	11.04 - 06.08	147	1984	4	BGB/BWE	**CL011**	4			pencil
2.0 TFSI	06.05 - 06.08	162	1984	4	BUL	**CL011**	4			pencil
2.0 TFSI	10.06 - 06.08	125	1984	4	BPJ/BYK	**CL011**	4			pencil
2.0 TFSI quattro	11.04 - 06.08	147	1984	4	BGB/BWE	**CL011**	4			pencil
2.0 TFSI quattro	06.05 - 06.08	162	1984	4	BUL	**CL011**	4			pencil
3.0 quattro	11.04 - 07.06	160	2976	6	BBJ	**CL034**	6			pencil
3.2 FSI	01.05 - 06.08	188	3123	6	AUK	**CL015**	6			pencil
3.2 FSI quattro	01.05 - 06.08	188	3123	6	AUK/BKH	**CL015**	6			pencil
RS4 quattro 4.2	09.05 - 06.08	309	4163	8	BNS	**CL011**	8			pencil
S4 quattro 4.2	11.04 - 06.08	253	4163	8	BHF/BBK	**CL029**	8			pencil
A4 (8K2, B8)										
1.8 TFSI	01.08 -	88	1798	4	CABA/CDHA	**CL011**	4			pencil
1.8 TFSI	11.07 -	118	1798	4	CDHB/CABB	**CL011**	4			pencil

AUDI A4 (8K2, B8) ▶

model	year	kW	cm³	cyl	engine	coil	pcs	boot	pcs	info
AUDI										
A4 (8K2, B8)										
1.8 TFSI	11.11 -	125	1798	4	CJEB	**CL032**	4			pencil
1.8 TFSI quattro	09.08 -	118	1798	4	CDHB	**CL011**	4			pencil
1.8 TFSI quattro	11.11 -	125	1798	4	CJEB	**CL032**	4			pencil
2.0 TFSI	06.08 -	132	1984	4	CDNB/CFKA/CAEA	**CL011**	4			pencil
2.0 TFSI	06.08 -	155	1984	4	CAEB/CDNC	**CL011**	4			pencil
2.0 TFSI flexible fuel	11.09 -	132	1984	4	CFKA	**CL011**	4			pencil
2.0 TFSI flex. fuel quattro	11.09 -	132	1984	4	CFKA	**CL011**	4			pencil
2.0 TFSI quattro	06.08 -	155	1984	4	CAEB/CPMA/CDNC	**CL011**	4			pencil
A4 Allroad (8KH, B8)										
2.0 TFSI quattro	04.09 -	155	1984	4	CPMA/CDNC	**CL011**	4			pencil
2.0 TFSI quattro	05.13 -	162	1984	4	CPMB	**CL011**	4			pencil
2.0 TFSI quattro	05.13 -	165	1984	4	CNCD	**CL032**	4			pencil
A4 Avant (8D5, B5)										
1.6	11.94 - 09.01	74	1595	4	AHL/ARM/ANA	**CL002**	1			
1.6	07.00 - 09.01	75	1595	4	ALZ	**CL002**	1			
1.8	02.96 - 09.01	92	1781	4	AVV/ADR/APT/ARG	**CL028**	1			semidirect / pencil / twin coil
1.8 quattro	01.96 - 09.01	92	1781	4	ADR/APT/ARG	**CL028**	1			semidirect / pencil / twin coil
1.8 T	03.96 - 09.01	110	1781	4	ARK/AEB/ANB/APU	**CL004**	4	CP001	4	pencil / engine code
				4	AWT	**CL005**	4			pencil / engine code
1.8 T	12.97 - 09.01	132	1781	4	AJL	**CL004**	4	CP001	4	pencil
1.8 T quattro	01.96 - 09.01	110	1781	4	ARK/AEB/ANB/APU	**CL004**	4	CP001	4	pencil / engine code
				4	AWT	**CL005**	4			pencil / engine code
1.8 T quattro	12.97 - 09.01	132	1781	4	AJL	**CL004**	4	CP001	4	pencil
2.4	03.97 - 09.01	121	2393	6	AML/ARJ/ALF/AGA/APS	**CL006**	1			
2.4	08.97 - 09.01	120	2393	6	AMM/APZ/AJG	**CL006**	1			
2.4 quattro	03.97 - 09.01	121	2393	6	AML/ARJ/ALF/AGA/APS	**CL006**	1			
2.4 quattro	08.97 - 09.01	120	2393	6	APZ	**CL006**	1			
2.6	02.96 - 07.98	110	2598	6	ABC	**CL006**	1			year
	02.96 - 09.01	110	2598	6	ABC	**CL026**	1			year
2.6 quattro	01.96 - 07.98	110	2598	6	ABC	**CL006**	1			year
	01.96 - 09.01	110	2598	6	ABC	**CL026**	1			year
2.8	03.96 - 09.96	128	2771	6	AAH	**CL026**	1			
2.8	10.96 - 09.01	142	2771	6	APR/ACK/ALG/AHA/AQD/AMX	**CL006**	1			
2.8 quattro	01.96 - 09.96	128	2771	6	AAH	**CL026**	1			
2.8 quattro	10.96 - 09.01	142	2771	6	APR/ACK/ALG/AHA/AQD/AMX	**CL006**	1			
RS4 quattro 2.7	05.00 - 09.01	280	2671	6	AZR/ASJ	**CL004**	6	CP001	6	pencil
S4 quattro 2.7	09.97 - 09.01	195	2671	6	AGB/AZB	**CL004**	6	CP001	6	pencil
A4 Avant (8E5, B6)										
1.6	09.01 - 12.04	75	1595	4	ALZ	**CL002**	1			
1.8 T	09.01 - 07.02	110	1781	4	AVJ	**CL005**	4			pencil
1.8 T	07.02 - 12.04	120	1781	4	BFB	**CL005**	4			pencil
1.8 T	11.02 - 12.04	140	1781	4	BEX	**CL005**	4			pencil
1.8 T quattro	09.01 - 07.02	110	1781	4	AVJ	**CL005**	4			pencil
1.8 T quattro	07.02 - 12.04	120	1781	4	BFB	**CL005**	4			pencil
1.8 T quattro	11.02 - 12.04	140	1781	4	BEX	**CL005**	4			pencil
2.0	09.01 - 12.04	96	1984	4	ALT	**CL034**	4			pencil
2.0 FSI	07.02 - 12.04	110	1984	4	AWA	**CL015**	4			pencil
2.4	09.01 - 12.04	120	2393	6	AMM	**CL006**	1			
2.4	09.01 - 12.04	125	2393	6	BDV	**CL006**	1			
3.0	09.01 - 12.04	162	2976	6	ASN	**CL034**	6			pencil
3.0	04.01 - 12.04	160	2976	6	BBJ	**CL034**	6			pencil
3.0 quattro	09.01 - 12.04	162	2976	6	ASN/AVK	**CL034**	6			pencil
3.0 quattro	04.01 - 12.04	160	2976	6	BBJ	**CL034**	6			pencil
S4 quattro 4.2	03.03 - 12.04	253	4163	8	BBK	**CL029**	8			pencil
A4 Avant (8ED, B7)										
1.6	11.04 - 06.08	75	1595	4	ALZ	**CL002**	1			
1.8 T	11.04 - 06.08	120	1781	4	BFB	**CL005**	4			pencil
1.8 T quattro	11.04 - 06.08	120	1781	4	BFB	**CL005**	4			pencil
2.0	11.04 - 06.08	96	1984	4	ALT	**CL005**	4			pencil
2.0 TFSI	10.06 - 06.08	125	1984	4	BPJ/BYK	**CL011**	4			pencil
2.0 TFSI	11.04 - 06.08	147	1984	4	BGB/BWE	**CL011**	4			pencil
2.0 TFSI	06.05 - 06.08	162	1984	4	BUL	**CL011**	4			pencil
2.0 TFSI quattro	11.04 - 06.08	147	1984	4	BWT/BGB/BWE	**CL011**	4			pencil
2.0 TFSI quattro	06.05 - 06.08	162	1984	4	BUL	**CL011**	4			pencil
3.0	11.04 - 05.06	160	2976	6	BBJ	**CL034**	6			pencil
3.0 quattro	11.04 - 07.06	160	2976	6	BBJ	**CL034**	6			pencil
3.2 FSI	01.05 - 06.08	188	3123	6	AUK	**CL015**	6			pencil
3.2 FSI quattro	01.05 - 06.08	188	3123	6	AUK	**CL015**	6			pencil
RS4 quattro 4.2.	09.05 - 06.08	309	4163	8	BNS	**CL011**	8			pencil
S4 quattro 4.2	11.04 - 06.08	253	4163	8	BBK	**CL029**	8			pencil

model	year	kW	cm³	cyl	engine	coil	pcs	boot	pcs	info
AUDI										
A4 Avant (8K5, B8)										
1.8 TFSI	04.08 -	88	1798	4	CDHA	**CL011**	4			pencil
1.8 TFSI	11.07 -	118	1798	4	CDHB/CABB	**CL011**	4			pencil
1.8 TFSI	11.11 -	125	1798	4	CJEB	**CL032**	4			pencil
1.8 TFSI quattro	09.08 -	118	1798	4	CDHB	**CL011**	4			pencil
1.8 TFSI quattro	11.11 -	125	1798	4	CJEB	**CL032**	4			pencil
2.0 TFSI	06.08 -	132	1984	4	CDNB/CFKA/CAEA	**CL011**	4			pencil
2.0 TFSI	06.08 -	155	1984	4	CAEB/CDNC	**CL011**	4			pencil
2.0 TFSI	05.13 -	165	1984	4	CNCD	**CL032**	4			pencil
2.0 TFSI flexible fuel	11.09 -	132	1984	4	CFKA	**CL011**	4			pencil
2.0 TFSI flex. fuel quattro	11.09 -	132	1984	4	CFKA	**CL011**	4			pencil
2.0 TFSI quattro	06.08 -	155	1984	4	CAEB/CDNC	**CL011**	4			pencil
2.0 TFSI quattro	05.13 -	165	1984	4	CNCD	**CL032**	4			pencil
A4 Cabriolet (8H7, B6, 8HE, B7)										
1.8 T	07.02 - 03.09	120	1781	4	BFB	**CL005**	4			pencil
1.8 T quattro	05.03 - 03.09	120	1781	4	BFB	**CL005**	4			pencil
2.0	09.04 - 12.05	96	1984	4	ALT	**CL034**	4			pencil
2.0 TFSI 16V	01.06 - 03.09	147	1984	4	BWE	**CL011**	4			pencil
2.4	04.02 - 12.05	120	2393	6	AMM	**CL006**	1			
2.4	04.02 - 12.05	125	2393	6	BDV	**CL006**	1			
3.0	04.02 - 12.05	162	2976	6	ASN	**CL034**	6			pencil
3.0 quattro	05.03 - 12.05	162	2976	6	ASN	**CL034**	6			pencil
RS4 quattro 4.2	06.06 - 03.09	309	4163	8	BNS	**CL011**	8			pencil
S4 quattro 4.2	03.04 - 03.09	253	4163	8	BBK	**CL029**	8			pencil
A5 (8T3)										
1.8 TFSI	05.09 -	118	1798	4	CDHB	**CL011**	4			pencil
1.8 TFSI	10.07 -	125	1798	4	CABD/CJEB	**CL011**	4			pencil
2.0 TFSI	11.08 -	132	1984	4	CDNB	**CL011**	4			pencil
2.0 TFSI	06.08 -	155	1984	4	CDNC	**CL011**	4			pencil
2.0 TFSI	05.13 -	165	1984	4	CNCD	**CL032**	4			pencil
2.0 TFSI quattro	06.08 -	155	1984	4	CAEB/CDNC	**CL011**	4			pencil
2.0 TFSI quattro	05.13 -	165	1984	4	CNCD	**CL032**	4			pencil
2.0 TFSI quattro	03.12 -	162	1984	4	CPMB/CAED	**CL011**	4			pencil
3.0 TFSI quattro	12.11 -	200	2995	6	CMUA	**CL015**	6			pencil
RS 5 quattro 4.2	03.10 -	331	4163	8	CFSA	**CL011**	8			pencil
S5 quattro 3.0	10.11 -	245	2995	6	CGWC/CTDA/CTUB	**CL015**	6			pencil
A5 Cabriolet (8F7)										
1.8 TFSI	09.09 -	118	1798	4	CDHB	**CL011**	4			pencil
1.8 TFSI	10.11 -	125	1798	4	CABD/CJEB	**CL032**	4			pencil
2.0 TFSI	03.09 -	132	1984	4	CDNB/CAEA	**CL011**	4			pencil
2.0 TFSI	03.09 -	155	1984	4	CAEB/CDNC	**CL011**	4			pencil
2.0 TFSI	05.13 -	162	1984	4	CAED	**CL011**	4			pencil
2.0 TFSI quattro	03.09 -	155	1984	4	CAEB/CDNC	**CL011**	4			pencil
2.0 TFSI quattro	03.12 -	162	1984	4	CPMB	**CL011**	4			pencil
3.0 TFSI quattro	11.11 -	200	2995	6	CMUA	**CL015**	6			pencil
A5 Sportback (8TA)										
1.8 TFSI	11.09 -	118	1798	4	CDHB	**CL011**	4			pencil
1.8 TFSI	08.11 -	125	1798	4	CJEB	**CL032**	4			pencil
1.8 TFSI	09.14 -	106	1798	4	CJED	**CL032**	4			pencil
2.0 TFSI	09.09 -	132	1984	4	CDNB	**CL011**	4			pencil
2.0 TFSI	09.09 -	155	1984	4	CDNC	**CL011**	4			pencil
2.0 TFSI	05.13 -	165	1984	4	CNCD	**CL032**	4			pencil
2.0 TFSI quattro	09.09 -	155	1984	4	CDNC	**CL011**	4			pencil
2.0 TFSI quattro	05.13 -	165	1984	4	CNCD	**CL032**	4			pencil
3.0 TFSI quattro	12.11 -	200	2995	6	CMUA	**CL015**	6			pencil
A6 (4A, C4)										
1.8	12.95 - 10.97	92	1781	4	ADR	**CL028**	1			semidirect / pencil / twin coil
1.8 quattro	12.95 - 10.97	92	1781	4	ADR	**CL028**	1			semidirect / pencil / twin coil
2.0	06.94 - 10.97	85	1984	4	ABK	**CL001**	1			
2.6	06.94 - 10.97	110	2598	6	ABC	**CL006**	1			
2.6 quattro	06.94 - 10.97	110	2598	6	ABC	**CL006**	1			
2.8	06.94 - 10.97	128	2771	6	AAH	**CL026**	1			
2.8	12.95 - 10.97	142	2771	6	ACK	**CL006**	1			
2.8 quattro	06.94 - 10.97	128	2771	6	AAH	**CL026**	1			
2.8 quattro	12.95 - 10.97	142	2771	6	ACK	**CL006**	1			
S6 Plus quattro 4.2	04.96 - 10.97	240	4172	8	AHK	**CL004**	8	CP001	8	pencil
S6 Turbo quattro 2.2	06.94 - 10.97	169	2226	5	AAN	**CL033**	5	CP002	5	pencil
A6 (4B2, C5)										
1.8	07.97 - 01.05	92	1781	4	ANQ/ARH/AJP/AQE	**CL014**	4			pencil
1.8 T	01.97 - 01.05	110	1781	4	ARK/AEB/ANB/APU	**CL004**	4	CP001	4	pencil / engine code
				4	AWT	**CL005**	4			pencil / engine code
1.8 T	12.97 - 01.05	132	1781	4	AJL	**CL004**	4	CP001	4	pencil

AUDI A6 (4B2, C5) ▶

model	year	kW	cm³	cyl	engine	coil	pcs	boot	pcs	info
AUDI										
A6 (4B2, C5)										
1.8 T quattro	02.97 - 01.05	110	1781	4	ARK/AEB/ANB/APU	**CL004**	4	CP001	4	pencil / engine code
				4	AWT	**CL005**	4			pencil / engine code
1.8 T quattro	12.97 - 01.05	132	1781	4	AJL	**CL004**	4	CP001	4	pencil
2.0	08.01 - 01.05	96	1984	4	ALT	**CL015**	4			pencil
2.4	07.98 - 01.05	100	2393	6	ARN/ASM/ALW	**CL006**	1			
2.4	02.97 - 01.05	115	2393	6	APC	**CL006**	1			
2.4	02.97 - 01.05	120	2393	6	AMM/APZ/AJG	**CL006**	1			
2.4	02.97 - 01.05	121	2393	6	AML/ARJ/ALF/AGA/APS	**CL006**	1			
2.4	08.01 - 01.05	125	2393	6	BDV	**CL006**	1			
2.4 quattro	08.98 - 07.99	115	2393	6	APC	**CL006**	1			
2.4 quattro	02.97 - 01.05	120	2393	6	APZ/AJG	**CL006**	1			
2.4 quattro	02.97 - 01.05	121	2393	6	AML/ARJ/ALF/AGA/APS	**CL006**	1			
2.4 quattro	08.01 - 01.05	125	2393	6	BDV	**CL006**	1			
2.7 T	02.99 - 01.05	169	2671	6	AJK	**CL004**	6	CP001	6	pencil
2.7 T quattro	12.97 - 01.05	169	2671	6	AJK/AZA	**CL004**	6	CP001	6	pencil
2.7 T quattro	08.01 - 01.05	184	2671	6	ARE	**CL004**	6	CP001	6	pencil / engine code
				6	BES	**CL005**	6			pencil / engine code
				6	BES/ARE	**CL006**	1			coil 6xPIN
2.8	10.97 - 05.00	132	2771	6	AGE	**CL006**	1			
2.8	07.99 - 01.05	140	2771	6	ATX	**CL006**	1			
2.8	02.97 - 01.05	142	2771	6	APR/ACK/ALG/AHA/AQD/AMX	**CL006**	1			
2.8 quattro	01.98 - 04.00	132	2771	6	AGE	**CL006**	1			
2.8 quattro	02.97 - 01.05	142	2771	6	APR/ACK/ALG/AHA/AQD/AMX	**CL006**	1			
3.0	08.01 - 01.05	162	2976	6	ASN	**CL034**	6			pencil
3.0 quattro	08.01 - 01.05	162	2976	6	ASN	**CL034**	6			pencil
3.7	03.99 - 01.05	191	3697	8	AQG	**CL014**	8			pencil
3.7 quattro	03.99 - 01.05	191	3697	8	AQG	**CL014**	8			pencil
4.2 quattro	11.98 - 01.05	220	4172	8	AWN/ARS/ASG	**CL014**	8			pencil
RS6 quattro 4.2	07.02 - 01.05	331	4172	8	BCY	**CL014**	8			pencil
S6 quattro 4.2	09.99 - 01.05	250	4172	8	AQJ/ANK	**CL014**	8			pencil
A6 (4F2, C6)										
2.0 TFSI	06.05 - 03.11	125	1984	4	BPJ	**CL011**	4			pencil
2.4	05.04 - 10.08	130	2393	6	BDW	**CL015**	6			pencil
2.4 quattro	01.05 - 10.08	130	2393	6	BDW	**CL015**	6			pencil
2.8 FSI	10.08 - 03.11	140	2773	6	CCDA	**CL015**	6			pencil
2.8 FSI	11.06 - 10.08	154	2773	6	BDX	**CL015**	6			pencil
2.8 FSI	10.08 - 03.11	162	2773	6	CCEA	**CL015**	6			pencil
2.8 FSI quattro	10.08 - 03.11	140	2773	6	CCDA	**CL015**	6			pencil
2.8 FSI quattro	06.07 - 10.08	154	2773	6	BDX	**CL015**	6			pencil
2.8 FSI quattro	10.08 - 03.11	162	2773	6	CCEA	**CL015**	6			pencil
3.0 quattro	05.04 - 05.06	160	2976	6	BBJ	**CL034**	6			pencil
3.0 TFSI quattro	10.08 - 03.11	213	2995	6	CAJA	**CL015**	6			pencil
3.2 FSI	05.04 - 05.09	188	3123	6	AUK/BKH	**CL015**	6			pencil
3.2 FSI quattro	05.04 - 10.08	188	3123	6	AUK/BKH	**CL015**	6			pencil
4.2 quattro	05.04 - 05.06	246	4163	8	BAT	**CL029**	8			pencil
4.2 FSI quattro	06.06 - 03.11	257	4163	8	BVJ	**CL015**	8			pencil
RS6 quattro 5.0	09.08 - 08.10	426	4991	10	BUH	**CL015**	10			pencil
S6 quattro 5.2	03.06 - 03.11	320	5204	10	BXA	**CL015**	10			pencil
A6 (4G2, C7, 4GC)										
1.8 TFSI	09.14 -	140	1798	4	CYGA	**CL032**	4			pencil
2.0 TFSI	05.11 -	132	1984	4	CDNB	**CL011**	4			pencil
2.0 TFSI	03.11 - 05.13	155	1984	4	CAEB	**CL011**	4			pencil
2.0 TFSI	09.14 -	185	1984	4	CYNB/CYPA	**CL032**	4			pencil
2.0 TFSI quattro	05.14 -	185	1984	4	CYNB/CYPA	**CL032**	4			pencil
2.8 FSI	03.11 -	150	2773	6	CHVA	**CL015**	6			pencil
2.8 FSI quattro	03.11 -	150	2773	6	CHVA	**CL015**	6			pencil
3.0 TFSI quattro	11.10 - 05.12	220	2995	6	CGWB	**CL015**	6			pencil
3.0 TFSI quattro	03.11 -	228	2995	6	CGWD/CGXB/CTUA	**CL015**	6			pencil
3.0 TFSI quattro	09.14 -	245	2995	6	CREC	**CL015**	6			pencil
A6 Allroad (4FH, C6)										
3.0 TFSI quattro	10.08 - 08.11	213	2995	6	CAJA	**CL015**	6			pencil
3.2 FSI quattro	05.06 - 10.08	188	3123	6	AUK	**CL015**	6			pencil
4.2 FSI quattro	05.06 - 12.10	257	4163	8	BVJ	**CL015**	8			pencil
A6 Allroad (4GH, 4GJ)										
3.0 TFSI quattro	01.12 -	228	2995	6	CGWD	**CL015**	6			pencil
3.0 TFSI quattro	09.14 -	245	2995	6	CREC	**CL015**	6			pencil
A6 Avant (4A, C4)										
1.8	12.95 - 12.97	92	1781	4	ADR	**CL028**	1			semidirect / pencil / twin coil
1.8 quattro	12.95 - 12.97	92	1781	4	ADR	**CL028**	1			semidirect / pencil / twin coil
2.6	06.94 - 12.97	110	2598	6	ABC	**CL006**	1			
2.6 quattro	06.94 - 12.97	110	2598	6	ABC	**CL006**	1			

AUDI A6 Avant (4A, C4) ▶

model	year	kW	cm³	cyl	engine	coil	pcs	boot	pcs	info
AUDI										
A6 Avant (4A, C4)										
2.8	06.94 - 12.97	128	2771	6	AAH	**CL026**	1			
2.8	12.95 - 12.97	142	2771	6	ACK	**CL006**	1			
2.8 quattro	06.94 - 12.97	128	2771	6	AAH	**CL026**	1			
2.8 quattro	12.95 - 12.97	142	2771	6	ACK	**CL006**	1			
S6 Plus quattro 4.2	04.96 - 12.97	240	4172	8	AHK	**CL004**	8	CP001	8	pencil
S6 Turbo quattro 2.2	06.94 - 12.97	169	2226	5	AAN	**CL033**	5	CP002	5	pencil
A6 Avant (4B5, C5)										
1.8	12.97 - 01.05	92	1781	4	ARH/AJP/AQE	**CL014**	4			pencil
1.8 T	12.97 - 01.05	110	1781	4	ARK/AEB/ANB/APU	**CL004**	4	CP001	4	pencil / engine code
				4	AWT	**CL005**	4			pencil / engine code
1.8 T	04.99 - 01.05	132	1781	4	AJL	**CL004**	4	CP001	4	pencil
1.8 T quattro	12.97 - 01.05	110	1781	4	ARK/AEB/ANB/APU	**CL004**	4	CP001	4	pencil / engine code
				4	AWT	**CL005**	4			pencil / engine code
1.8 T quattro	12.97 - 01.05	132	1781	4	AJL	**CL004**	4	CP001	4	pencil
2.0	08.01 - 01.05	96	1984	4	ALT	**CL015**	4			pencil
2.4	12.97 - 01.05	121	2393	6	AML/ARJ/ALF/AGA/APS	**CL006**	1			
2.4	07.98 - 01.05	100	2393	6	ARN/ASM/ALW	**CL006**	1			
2.4	12.97 - 01.05	115	2393	6	APC	**CL006**	1			
2.4	08.01 - 01.05	125	2393	6	BDV	**CL006**	1			
2.4	12.97 - 01.05	120	2393	6	AMM/APZ/AJG	**CL006**	1			
2.4 quattro	12.97 - 01.05	121	2393	6	AML/ARJ/ALF/AGA/APS	**CL006**	1			
2.4 quattro	08.01 - 01.05	125	2393	6	BDV	**CL006**	1			
2.4 quattro	12.97 - 01.05	120	2393	6	APZ/AJG	**CL006**	1			
2.4 quattro	08.98 - 05.01	115	2393	6	APC	**CL006**	1			
2.7 T	02.99 - 01.05	169	2671	6	AJK	**CL004**	6	CP001	6	pencil
2.7 T quattro	12.97 - 01.05	169	2671	6	AJK/AZA	**CL004**	6	CP001	6	pencil
2.7 T quattro	08.01 - 01.05	184	2671	6	ARE	**CL004**	6	CP001	6	pencil / engine code
				6	BES	**CL005**	6			pencil / engine code
2.8	12.97 - 05.00	132	2771	6	AGE	**CL006**	1			
2.8	07.99 - 01.05	140	2771	6	ATX	**CL006**	1			
2.8	12.97 - 01.05	142	2771	6	APR/ACK/ALG/AHA/AQD/AMX	**CL006**	1			
2.8 quattro	12.97 - 01.05	142	2771	6	APR/ACK/ALG/AHA/AQD/AMX	**CL006**	1			
3.0	08.01 - 01.05	162	2976	6	ASN	**CL034**	6			pencil
3.0 quattro	08.01 - 01.05	162	2976	6	ASN	**CL034**	6			pencil
3.7	03.99 - 01.05	191	3697	8	AQG	**CL014**	8			pencil
3.7 quattro	03.99 - 01.05	191	3697	8	AQG	**CL014**	8			pencil
4.2 quattro	11.98 - 01.05	220	4172	8	AWN/ARS/ASG	**CL014**	8			pencil
RS6 plus quattro 4.2	04.04 - 01.05	353	4172	8	BRV	**CL014**	8			pencil
RS6 quattro 4.2	07.02 - 01.05	331	4172	8	BCY	**CL014**	8			pencil
S6 quattro 4.2	09.99 - 01.05	250	4172	8	AQJ/ANK	**CL014**	8			pencil
A6 Avant (4F5, C6)										
2.0 TFSI	06.05 - 08.11	125	1984	4	BPJ	**CL011**	4			pencil
2.4	03.05 - 10.08	130	2393	6	BDW	**CL015**	6			pencil
2.4 quattro	03.05 - 10.08	130	2393	6	BDW	**CL015**	6			pencil
2.8 FSI	10.08 - 08.11	140	2773	6	CCDA	**CL015**	6			pencil
2.8 FSI	11.06 - 10.08	154	2773	6	BDX	**CL015**	6			pencil
2.8 FSI	10.08 - 08.11	162	2773	6	CCEA	**CL015**	6			pencil
2.8 FSI quattro	10.08 - 08.11	140	2773	6	CCDA	**CL015**	6			pencil
2.8 FSI quattro	06.07 - 10.08	154	2773	6	BDX	**CL015**	6			pencil
2.8 FSI quattro	10.08 - 08.11	162	2773	6	CCEA	**CL015**	6			pencil
3.0	03.05 - 05.06	160	2976	6	BBJ	**CL034**	6			pencil
3.0 quattro	03.05 - 05.06	160	2976	6	BBJ	**CL034**	6			pencil
3.0 TFSI quattro	10.08 - 08.11	213	2995	6	CAJA	**CL015**	6			pencil
3.0 TFSI quattro	10.08 - 08.11	220	2995	6	CCAA	**CL015**	6			pencil
3.2 FSI	03.05 - 10.08	188	3123	6	AUK	**CL015**	6			pencil
3.2 FSI quattro	03.05 - 10.08	188	3123	6	AUK	**CL015**	6			pencil
4.2 quattro	03.05 - 05.06	246	4163	8	BAT	**CL029**	8			pencil
4.2 FSI quattro	06.06 - 08.11	257	4163	8	BVJ	**CL015**	8			pencil
RS6 quattro 5.0	04.08 - 08.10	426	4991	10	BUH	**CL015**	10			pencil
S6 quattro 5.2	03.06 - 08.11	320	5204	10	BXA	**CL015**	10			pencil
A6 Avant (4G5, C7, 4GD)										
1.8 TFSI	09.14 -	140	1798	4	CYGA	**CL032**	4			pencil
2.0 TFSI	06.11 -	132	1984	4	CDNB	**CL011**	4			pencil
2.0 TFSI	09.14 -	185	1984	4	CYNB/CYPA	**CL032**	4			pencil
2.8 FSI	05.11 -	150	2773	6	CHVA	**CL015**	6			pencil
2.8 FSI quattro	05.11 -	150	2773	6	CHVA	**CL015**	6			pencil
3.0 TFSI quattro	05.11 - 05.12	220	2995	6	CGWB	**CL015**	6			pencil
3.0 TFSI quattro	11.11 -	228	2995	6	CGWD	**CL015**	6			pencil
3.0 TFSI quattro	09.14 -	245	2995	6	CREC	**CL015**	6			pencil
A7 Sportback (4GA, 4GF)										
2.0 TFSI	09.14 -	185	1984	4	CYPA	**CL032**	4			pencil

AUDI A7 Sportback (4GA, 4GF) ▶

model	year	kW	cm³	cyl	engine	coil	pcs	boot	pcs	info
AUDI										
A7 Sportback (4GA, 4GF)										
2.8 FSI	02.11 -	150	2773	6	CHVA	**CL015**	6			pencil
2.8 FSI quattro	10.10 -	150	2773	6	CHVA/CNYA	**CL015**	6			pencil
3.0 TFSI quattro	10.10 -	220	2995	6	CGWB/CHMA	**CL015**	6			pencil
3.0 TFSI quattro	01.11 -	228	2995	6	CTTA/CGWD/CGXB/CTUA	**CL015**	6			pencil
3.0 TFSI quattro	05.14 -	245	2995	6	CREC	**CL015**	6			pencil
A8 (4D2, 4D8)										
2.8	07.95 - 03.96	120	2771	6	AEJ	**CL026**	1			
2.8	03.94 - 03.96	128	2771	6	AAH	**CL026**	1			
2.8	04.96 - 09.02	142	2771	6	APR/ACK/ALG/AQD/AMX	**CL006**	1			
2.8 quattro	07.95 - 03.96	120	2771	6	AEJ	**CL026**	1			
2.8 quattro	03.94 - 03.96	128	2771	6	AAH	**CL026**	1			
2.8 quattro	04.96 - 09.02	142	2771	6	APR/ACK/AQD/AMX	**CL006**	1			
3.7	07.95 - 12.98	169	3697	8	AEW	**CL004**	8	CP009	8	pencil
3.7	11.98 - 09.02	191	3697	8	AKC/AQG	**CL014**	8			pencil
3.7 quattro	07.95 - 11.98	169	3697	8	AKJ/AEW	**CL004**	8	CP009	8	pencil
3.7 quattro	11.98 - 09.02	191	3697	8	AKC/AQG	**CL014**	8			pencil
4.2 quattro	02.99 - 04.00	175	4172	8	ARU	**CL014**	8			pencil
4.2 quattro	03.94 - 07.96	180	4172	8	AEM	**CL004**	8	CP009	8	pencil
4.2 quattro	03.94 - 11.98	220	4172	8	AKG/ABZ	**CL004**	8	CP009	8	pencil
4.2 quattro	11.98 - 09.02	228	4172	8	AUW/AQF/AUX	**CL014**	8			pencil
S 8 quattro 4.2	07.96 - 06.99	250	4172	8	AHC/AKH	**CL004**	8	CP001	8	pencil
S 8 quattro 4.2	06.99 - 09.02	265	4172	8	AQH/AVP	**CL014**	8			pencil
A8 (4E_)										
2.8 FSI	08.07 - 07.10	154	2773	6	BDX	**CL015**	6			pencil
3.0	07.03 - 05.05	162	2976	6	ASN	**CL034**	6			pencil
3.0	07.03 - 05.06	160	2976	6	BBJ	**CL034**	6			pencil
3.2 FSI	06.05 - 07.10	191	3123	6	BPK	**CL015**	6			pencil
3.2 FSI quattro	06.05 - 07.10	191	3123	6	BPK	**CL015**	6			pencil
3.7 quattro	10.02 - 05.06	206	3697	8	BFL	**CL029**	8			pencil
4.2 quattro	10.02 - 07.10	246	4172	8	BFM	**CL029**	8			pencil
4.2 FSI quattro	06.06 - 07.10	257	4163	8	BVJ	**CL015**	8			pencil
6.0 W12 quattro	12.03 - 07.10	331	5998	12	BTE/BSB/BHT	**CL022**	12			pencil
S8 quattro 5.2	06.06 - 07.10	331	5204	10	BSM	**CL015**	10			pencil
A8 (4H_)										
3.0 TFSI quattro	07.10 -	213	2995	6	CGWA/CREG/CGXA	**CL015**	6			pencil
3.0 TFSI quattro	11.11 -	228	2995	6	CGWD/CREA	**CL015**	6			pencil
3.0 TFSI quattro	06.10 -	245	2995	6	CTDA/CMDA/CTUB/CGXC	**CL015**	6			pencil
4.2 FSI quattro	11.09 -	273	4163	8	CDRA	**CL015**	8			pencil
Allroad (4BH, C5)										
2.7 T quattro	05.00 - 08.05	184	2671	6	ARE	**CL004**	6	CP001	6	pencil
4.2 V8 quattro	07.02 - 08.05	220	4163	8	BAS	**CL017**	8			pencil
Cabriolet (8G7, B4)										
1.8	01.97 - 08.00	92	1781	4	ADR	**CL028**	1			semidirect / pencil / twin coil
2.0 E	01.93 - 07.98	85	1984	4	ABK	**CL001**	1			
2.6	06.93 - 08.00	110	2598	6	ABC	**CL006**	1			
2.8	11.92 - 08.00	128	2771	6	AAH	**CL006**	1			
Coupe (89, 8B)										
2.0	05.89 - 12.96	85	1984	4	AAD	**CL001**	1			
2.6	08.92 - 12.96	110	2598	6	ABC	**CL006**	1			
2.6 quattro	08.92 - 12.96	110	2598	6	ABC	**CL006**	1			
2.8	09.91 - 12.96	128	2771	6	AAH	**CL006**	1			
2.8 quattro	08.91 - 12.96	128	2771	6	AAH	**CL006**	1			
S2 quattro 2.2	10.92 - 12.96	169	2226	5	ABY	**CL033**	5	CP002	5	pencil
Q3 (8U)										
2.0 TFSI	05.15 -	132	1984	4	CULB	**CL032**	4			pencil
2.0 TFSI quattro	06.11 -	125	1984	4	CCZC	**CL011**	4			pencil
2.0 TFSI quattro	11.14 -	132	1984	4	CULB	**CL032**	4			pencil
2.0 TFSI quattro	06.11 -	155	1984	4	CPSA	**CL011**	4			pencil
RS 2.5 quattro	05.13 -	250	2480	5	CZGA	**CL011**	5			pencil
Q5 (8R)										
2.0 TFSI quattro	08.09 -	132	1984	4	CDNB/CNCB	**CL011**	4			pencil
2.0 TFSI quattro	11.08 -	155	1984	4	CAEB/CPMA/CDNC	**CL011**	4			pencil
3.2 FSI quattro	11.08 -	199	3197	6	CALB	**CL011**	6			pencil
Q7 (4L)										
3.0 TFSI	05.10 -	200	2995	6	CJWC/CJTC	**CL015**	6			pencil
3.0 TFSI	05.11 -	206	2995	6	CTWB/CJWE	**CL015**	6			pencil
3.0 TFSI	05.10 -	245	2995	6	CJTB/CTWA/CNAA/CJWB	**CL015**	6			pencil
3.6 FSI	08.06 - 05.10	206	3597	6	BHK	**CL016**	6			pencil
4.2 FSI	03.06 - 05.10	257	4163	8	BAR	**CL015**	8			pencil
Q7 (4M)										
3.0 TFSI	01.15 -	245	2995	6	CREC	**CL015**	6			pencil

model	year	kW	cm³	cyl	engine	coil	pcs	boot	pcs	info
AUDI										
R8										
4.2 FSI quattro	04.07 - 09.10	309	4163	8	BYH	**CL015**	8			pencil
4.2 FSI quattro	07.10 - 07.15	316	4163	8	CNDA	**CL015**	8			pencil
5.2 FSI quattro	04.09 - 07.15	386	5204	10	BUJ/CTYA	**CL015**	10			pencil
5.2 FSI quattro	11.10 - 07.15	412	5204	10	CMPA	**CL011**	10			pencil
5.2 FSI quattro	07.14 - 07.15	419	5204	10	CTPB	**CL015**	10			pencil
R8 Spyder										
4.2 FSI quattro	09.10 - 07.15	316	4163	8	CNDA	**CL015**	8			pencil
5.2 FSI quattro	11.11 - 07.15	412	5204	10	CMPA	**CL011**	10			pencil
5.2 FSI quattro	02.10 - 07.15	386	5204	10	BUJ/CTYA	**CL015**	10			pencil
TT (8N3)										
1.8 T	09.02 - 06.06	110	1781	4	AUM	**CL005**	4			1st pencil
						CL014	4			2nd pencil
1.8 T	09.05 - 06.06	120	1781	4	BVP	**CL005**	4			pencil
1.8 T	10.98 - 08.00	132	1781	4	AJQ/APP	**CL014**	4			year / pencil
	09.00 - 06.06	132		4	APP/AUQ	**CL005**	4			year / pencil/ engine code
1.8 T	09.05 - 06.06	140	1781	4	BVR	**CL005**	4			pencil
1.8 T quattro	10.98 - 06.06	132	1781	4	ARY	**CL005**	4			pencil / engine code
				4	AJQ	**CL014**	4			pencil / engine code
1.8 T quattro	09.05 - 06.06	140	1781	4	BVR	**CL005**	4			pencil
1.8 T quattro	10.98 - 06.06	165	1781	4	BAM	**CL005**	4			pencil / engine code
				4	APX	**CL014**	4			pencil / engine code
1.8 T quattro	03.05 - 06.06	176	1781	4	BFV	**CL005**	4			pencil
3.2 VR6 quattro	07.03 - 06.06	184	3189	6	BPF/BHE	**CL016**	6			pencil
TT (8J3)										
1.8 TFSI	06.08 - 06.14	118	1798	4	CDAA	**CL011**	4			pencil
2.0 TFSI	08.06 - 06.10	147	1984	4	BWA/BPY/CCTA	**CL011**	4			pencil
2.0 TFSI	05.10 - 06.14	155	1984	4	CESA	**CL011**	4			pencil
2.0 TFSI quattro	06.08 - 06.10	147	1984	4	BWA/CCZA	**CL011**	4			pencil
2.0 TFSI quattro	05.10 - 06.14	155	1984	4	CETA/CESA	**CL011**	4			pencil
2.0 TTS quattro	05.08 - 06.14	195	1984	4	CDMA/CDLA	**CL011**	4			pencil
2.0 TTS quattro	05.08 - 06.14	200	1984	4	CDLB	**CL011**	4			pencil
2.5 RS quattro	07.09 - 06.14	250	2480	5	CEPA	**CL011**	5			pencil
2.5 RS quattro	05.11 - 06.14	265	2480	5	CEPB	**CL011**	5			pencil
3.2 V6 quattro	08.06 - 06.10	184	3189	6	BUB	**CL016**	6			pencil
TT (FV3)										
2.0 TFSI	07.14 -	169	1984	4	CHHC	**CL032**	4			pencil
2.0 TFSI quattro	07.14 -	169	1984	4	CHHC	**CL032**	4			pencil
TT Roadster (8N9)										
1.8 T	01.01 - 06.06	110	1781	4	AUM	**CL005**	4			pencil
1.8 T	09.05 - 06.06	120	1781	4	BVP	**CL005**	4			pencil
1.8 T	10.99 - 08.00	132	1781	4	AJQ/APP	**CL014**	4			year / pencil
				4	APP/AUQ	**CL005**	4			year / pencil/ engine code
1.8 T	09.05 - 06.06	140	1781	4	BVR	**CL005**	4			pencil
1.8 T quattro	02.00 - 06.06	132	1781	4	ARY	**CL005**	4			pencil
1.8 T quattro	09.05 - 06.06	140	1781	4	BVR	**CL005**	4			pencil
1.8 T quattro	10.99 - 06.06	165	1781	4	BAM/APX	**CL005**	4			pencil
3.2 VR6 quattro	07.03 - 06.06	184	3189	6	BPF/BHE	**CL016**	6			pencil
TT Roadster (8J9)										
1.8 TFSI	06.08 - 06.14	118	1798	4	CDAA	**CL011**	4			pencil
2.0 TFSI	03.07 - 06.10	147	1984	4	BWA/BPY/CCTA	**CL011**	4			pencil
2.0 TFSI	05.10 - 06.14	155	1984	4	CESA	**CL011**	4			pencil
2.0 TFSI quattro	06.08 - 06.10	147	1984	4	CCZA	**CL011**	4			pencil
2.0 TFSI quattro	05.10 - 06.14	155	1984	4	CETA/CESA	**CL011**	4			pencil
2.0 TTS quattro	05.08 - 06.14	195	1984	4	CDMA/CDLA	**CL011**	4			pencil
2.0 TTS quattro	05.08 - 06.14	200	1984	4	CDLB	**CL011**	4			pencil
2.5 RS quattro	07.09 - 06.14	250	2480	5	CEPA	**CL011**	5			pencil
3.2 V6 quattro	03.07 - 06.10	184	3189	6	BUB	**CL016**	6			pencil
TT Roadster (FV9)										
2.0 TFSI	11.14 -	169	1984	4	CHHC	**CL032**	4			pencil
2.0 TFSI quattro	11.14 -	169	1984	4	CHHC	**CL032**	4			pencil
BMW										
1 (E81)										
116 i	03.07 - 09.12	85	1596	4	N45 B16 A/N43 B16 A	**CL602**	4			pencil
116 i	03.07 - 09.12	90	1597	4	N43 B16 A	**CL619**	4			pencil
116 i	11.08 - 09.12	90	1995	4	N43 B20 A	**CL619**	4			pencil
118 i	09.06 - 09.12	105	1995	4	N43 B20 A	**CL619**	4			pencil
120 i	09.06 - 09.12	115	1995	4	N46 B20 B/N46 B20 C	**CL602**	4			pencil
120 i	09.06 - 09.12	125	1995	4	N43 B20 A	**CL619**	4			pencil
130 i	09.06 - 09.12	190	2996	6	N52 B30 A/_ B30 BF/_ B30 B	**CL603**	6			pencil
130 i	09.06 - 09.12	195	2996	6	N52 B30 A/_ B30 BF/_ B30 B	**CL603**	6			pencil

BMW ▶

model	year	kW	cm³	cyl	engine	coil	pcs	boot	pcs	info
BMW										
1 Cabriolet (E88)										
118 i	03.08 -	105	1995	4	N43 B20 A	**CL619**	4			pencil
120 i	03.08 -	125	1995	4	N43 B20 A	**CL619**	4			pencil
125 i	03.08 -	160	2996	6	N52 B30 A	**CL603**	6			pencil
135 i	03.08 -	225	2979	6	N55 B30 A/N54 B30 A	**CL603**	6			pencil
1 Coupe (E82)										
120 i	10.07 -	125	1995	4	N43 B20 A	**CL619**	4			pencil
125 i	10.07 -	160	2996	6	N52 B30 A	**CL603**	6			pencil
135 i	10.07 -	225	2979	6	N55 B30 A/N54 B30 A	**CL603**	6			pencil
2 Active Tourer (F45)										
218 i	09.14 -	100	1499	3	B38 A15 A/B38 A15 MO	**CL626**	3			pencil
225 i	09.14 -	170	1998	4	B48 A20 B	**CL626**	4			pencil
3 (E30)										
318 is	09.89 - 08.91	100	1796	4	M42 B18 (184S1)	**CL601**	4	CP003	4	pencil
						CL615	1			coil 4xPIN
3 (E36)										
316 i	07.93 - 02.98	75	1596	4	M43 B16 (164E2)	**CL615**	1			
318 i	10.93 - 02.98	85	1796	4	M43 B18 (184E2)	**CL615**	1			
318 is	03.93 - 09.93	103	1796	4	M42 B18 (184S1)	**CL601**	4	CP003	4	pencil
						CL615	1			coil 4xPIN
318 is	09.95 - 02.98	103	1895	4	M44 B19 (194S1)	**CL615**	1			
320 i	09.90 - 02.98	110	1991	6	M52 B20 (206S3, _S2, _S1)	**CL601**	6	CP003	6	pencil
323 i 2.5	03.95 - 02.98	125	2494	6	M52 B25 (256S3)	**CL600**	6	CP003	6	pencil
325 i	09.90 - 09.95	141	2494	6	M50 B25 (256S1, _S2	**CL601**	6	CP003	6	pencil
328 i	01.95 - 02.98	142	2793	6	M52 B28 (286S1)	**CL600**	6	CP003	6	pencil
M3 3.0	08.94 - 09.95	210	2990	6	S50 B30 (306S1)	**CL601**	6	CP005	6	pencil
M3 3.2	09.95 - 02.98	236	3201	6	S50 B32 (326S1)	**CL600**	6	CP003	6	pencil
3 (E46)										
316 i	09.98 - 02.05	77	1895	4	M43 B19 (194E1)	**CL615**	1			
316 i	04.00 - 02.05	77	1596	4	M43 B16 (164E3)	**CL615**	1			
316 i	02.02 - 02.05	85	1796	4	N46 B18 A/N42 B18 A	**CL602**	4			pencil
316 i	06.02 - 02.05	85	1596	4	N45 B16 A/N40 B16 A	**CL602**	4			pencil
318 i	02.98 - 09.01	87	1895	4	M43 B19 (194E1)	**CL615**	1			
318 i	09.01 - 02.05	105	1995	4	N46 B20 A/N42 B20 A	**CL602**	4			pencil
320 i	03.98 - 09.00	110	1991	6	M52 B20 (206S4)	**CL600**	6	CP003	6	pencil
320 i	06.00 - 09.02	125	2171	6	M54 B22 (226S1)	**CL600**	6	CP003	6	year / pencil
	10.02 - 02.05	125	2171	6	M54 B22 (226S1)	**CL602**	6			year / pencil
323 i	03.98 - 09.00	125	2494	6	M52 B25 (256S4)	**CL600**	6	CP003	6	pencil
325 i	06.00 - 09.02	141	2494	6	M54 B25 (256S5)	**CL600**	6	CP003	6	year / pencil
	10.02 - 02.05	141	2494	6	M54 B25 (256S5)	**CL602**	6			year / pencil
325 xi	06.00 - 09.02	141	2494	6	M54 B25 (256S5)	**CL600**	6	CP003	6	year / pencil
	10.02 - 02.05	141	2494	6	M54 B25 (256S5)	**CL602**	6			year / pencil
328 i	02.98 - 06.00	142	2793	6	M52 B28 (286S2)	**CL600**	6	CP003	6	pencil
330 i	06.00 - 09.02	170	2979	6	M54 B30 (306S3)	**CL600**	6	CP003	6	year / pencil
	10.02 - 02.05	170	2979	6	M54 B30 (306S3)	**CL602**	6			year / pencil
330 xi	06.00 - 09.02	170	2979	6	M54 B30 (306S3)	**CL600**	6	CP003	6	year / pencil
	10.02 - 02.05	170	2979	6	M54 B30 (306S3)	**CL602**	6			year / pencil
3 (E90)										
316 i	02.06 - 12.11	85	1596	4	N45 B16 A	**CL602**	4			pencil
318 i	05.06 - 03.07	95	1995	4	N46 B20 B	**CL602**	4			pencil
318 i	09.07 - 12.11	105	1995	4	N43 B20 A	**CL619**	4			pencil
320 i	01.05 - 03.07	110	1995	4	N46 B20 B/_ B20 A/_ B20 C	**CL602**	4			pencil
320 i	09.07 - 12.11	125	1995	4	N43 B20 A	**CL619**	4			pencil
320 si	05.06 - 12.11	127	1997	4	N45 B20 A	**CL602**	4			pencil
325 i	01.05 - 04.06	160	2497	6	N52 B25 A	**CL623**	6			year / pencil
	05.06 - 12.11	160	2497	6	N52 B25 A	**CL603**	6			year / pencil
325 i	09.07 - 12.11	160	2996	6	N53 B30 A	**CL619**	6			pencil
325 i xDrive	09.08 - 12.11	160	2996	6	N53 B30 A	**CL619**	6			pencil
325 xi	01.05 - 04.06	160	2497	6	N52 B25 A	**CL623**	6			year / pencil
	05.06 - 12.11	160	2497	6	N52 B25 A	**CL603**	6			year / pencil
325 xi	09.07 - 12.11	160	2996	6	N53 B30 A	**CL619**	6			pencil
330 i	01.05 - 04.06	190	2996	6	N52 B30 A	**CL623**	6			year / pencil
	05.06 - 08.07	190	2996	6	N52 B30 A	**CL603**	6			year / pencil
330 i	09.07 - 12.11	200	2996	6	N52 B30 A/N53 B30 A	**CL619**	6			pencil
330 i xDrive	09.08 - 12.11	200	2996	6	N53 B30 A	**CL619**	6			pencil
330 xi	01.05 - 08.07	190	2996	6	N52 B30 A	**CL623**	6			pencil
330 xi	09.07 - 12.11	200	2996	6	N53 B30 A	**CL619**	6			pencil
335 i	09.06 - 12.11	225	2979	6	N55 B30 A/N54 B30 A	**CL603**	6			pencil
335 i xDrive	09.08 - 12.11	225	2979	6	N55 B30 A/N54 B30 A	**CL603**	6			pencil
335 xi	09.07 - 12.11	225	2979	6	N55 B30 A/N54 B30 A	**CL603**	6			pencil
M3 4.0	03.07 - 12.11	309	3999	8	S65 B40 A	**CL624**	8			pencil

model	year	kW	cm³	cyl	engine	coil	pcs	boot	pcs	info
BMW										
3 Cabriolet (E36)										
318 i	01.94 - 04.99	85	1796	4	M43 B18 (184E2)	**CL615**	1			
320 i	12.93 - 04.99	110	1991	6	M52 B20 (206S3, _S2)	**CL601**	6	CP003	6	pencil
323 i	06.95 - 04.99	125	2494	6	M52 B25 (256S3)	**CL600**	6	CP003	6	pencil
325 i	03.93 - 03.95	141	2494	6	M50 B25 (256S2)	**CL601**	6	CP003	6	pencil
328 i	03.95 - 04.99	142	2793	6	M52 B28 (286S1)	**CL600**	6	CP003	6	pencil
M3 3.0	01.94 - 10.95	210	2990	6	S50 B30 (306S1)	**CL601**	6	CP005	6	pencil
M3 3.2	10.95 - 04.99	236	3201	6	S50 B32 (326S1)	**CL600**	6	CP003	6	pencil
3 Cabriolet (E46)										
318 Ci	09.01 -	105	1995	4	N46 B20 A/N42 B20 A	**CL602**	4			pencil
318 Ci	02.05 -	110	1995	4	N46 B20 B/N46 B20 A	**CL602**	4			pencil
320 Ci	09.00 - 09.02	125	2171	6	M54 B22 (226S1)	**CL600**	6	CP003	6	year / pencil
	10.02 -	125	2171	6	M54 B22 (226S1)	**CL602**	6			year / pencil
323 Ci	04.00 - 09.00	125	2494	6	M52 B25 (256S4)	**CL600**	6	CP003	6	pencil
325 Ci	09.00 - 09.02	141	2494	6	M54 B25 (256S5)	**CL600**	6	CP003	6	year / pencil
	10.02 -	141	2494	6	M54 B25 (256S5)	**CL602**	6			year / pencil
330 Ci	06.00 - 09.02	170	2979	6	M54 B30 (306S3)	**CL600**	6	CP003	6	year / pencil
	10.02 -	170	2979	6	M54 B30 (306S3)	**CL602**	6			year / pencil
M3 3.2	04.01 -	252	3246	6	S54 B32 (326S4)	**CL602**	6			pencil
3 Cabriolet (E93)										
320 i	03.07 -	125	1995	4	N43 B20 A	**CL619**	4			pencil
325 i	03.07 -	160	2996	6	N53 B30 A	**CL619**	6			pencil
325 i	03.07 -	160	2497	6	N52 B25 A	**CL603**	6			pencil
330 i	03.07 -	200	2996	6	N52 B30 A/N53 B30 A	**CL619**	6			pencil
335 i	03.07 -	225	2979	6	N54 B30 B/_B30 A/N55 B30 A	**CL603**	6			pencil
M3 4.0	03.07 -	309	3999	8	S65 B40 A	**CL624**	8			pencil
3 Compact (E36)										
316 g	03.94 - 08.00	75	1596	4	M43 B16 (164E2)	**CL615**	1			
316 i	03.94 - 08.00	75	1596	4	M43 B16 (164E2)	**CL615**	1			
316 i	12.98 - 08.00	77	1895	4	M43 B19 (194E1)	**CL615**	1			
318 ti	11.94 - 08.95	103	1796	4	M42 B18 (184S1)	**CL615**	1			
318 ti	07.95 - 08.00	103	1895	4	M44 B19 (194S1)	**CL615**	1			
323 ti	08.97 - 08.00	125	2494	6	M52 B25 (256S3)	**CL600**	6	CP003	6	pencil
3 Compact (E46)										
316 ti	06.01 - 02.05	85	1796	4	N46 B18 A/N42 B18 A	**CL602**	4			pencil
316 ti	06.02 - 02.05	85	1596	4	N45 B16 A/N40 B16 A	**CL602**	4			pencil
318 ti	09.01 - 02.05	105	1995	4	N46 B20 A/N42 B20 A	**CL602**	4			pencil
325 ti	06.01 - 09.02	141	2494	6	M54 B25 (256S5)	**CL600**	6	CP003	6	year / pencil
	10.02 - 12.04	141	2494	6	M54 B25 (256S5)	**CL602**	6			year / pencil
3 Coupe (E36)										
316 i	09.93 - 04.99	75	1596	4	M43 B16 (164E2)	**CL615**	1			
318 is	03.92 - 10.95	103	1796	4	M42 B18 (184S1)	**CL615**	1			
318 is	09.95 - 04.99	103	1895	4	M44 B19 (194S1)	**CL615**	1			
320 i	03.92 - 04.99	110	1991	6	M52 B20 (206S3, _S2, _S1)	**CL600**	6	CP003	6	pencil
323 i	03.95 - 04.99	125	2494	6	M52 B25 (256S3)	**CL600**	6	CP003	6	pencil
325 i	03.92 - 04.99	141	2494	6	M50 B25 (256S1, _S2)	**CL601**	6	CP003	6	pencil
328 i	01.95 - 04.99	142	2793	6	M52 B28 (286S1)	**CL600**	6	CP003	6	pencil
M3 3.0	10.92 - 01.95	210	2990	6	S50 B30 (306S1)	**CL601**	6	CP005	6	pencil
M3 3.0	01.95 - 10.95	217	2990	6	S50 B30 (306S1)	**CL601**	6	CP005	6	pencil
M3 3.2	10.95 - 04.99	236	3201	6	S50 B32 (326S1)	**CL600**	6	CP003	6	pencil
3 Coupe (E46)										
316 Ci	04.00 - 07.06	77	1596	4	M43 B16 (164E3)	**CL615**	1			
316 Ci	06.02 - 07.06	85	1596	4	N45 B16 A	**CL602**	4			pencil
318 Ci	11.99 - 09.01	87	1895	4	M43 B19 (194E1)	**CL615**	1			
318 Ci	09.01 - 07.06	105	1995	4	N46 B20 A/N42 B20 A	**CL602**	4			pencil
318 Ci	03.05 - 07.06	110	1995	4	N46 B20 A	**CL602**	4			pencil
320 Ci	08.99 - 09.00	110	1991	6	M52 B20 (206S4)	**CL600**	6	CP003	6	pencil
320 Ci	06.00 - 09.02	125	2171	6	M54 B22 (226S1)	**CL600**	6	CP003	6	year / pencil
	10.02 - 07.06	125	2171	6	M54 B22 (226S1)	**CL602**	6			year / pencil
323 Ci	04.99 - 09.00	125	2494	6	M52 B25 (256S4)	**CL600**	6	CP003	6	pencil
325 Ci	06.00 - 09.02	141	2494	6	M54 B25 (256S5)	**CL600**	6	CP003	6	year / pencil
325 Ci	10.02 - 07.06	141	2494	6	M54 B25 (256S5)	**CL602**	6			year / pencil
328 Ci	04.99 - 06.00	142	2793	6	M52 B28 (286S2)	**CL600**	6	CP003	6	pencil
330 Ci	06.00 - 09.02	170	2979	6	M54 B30 (306S3)	**CL600**	6	CP003	6	year / pencil
	09.02 - 07.06	170	2979	6	M54 B30 (306S3)	**CL602**	6			year / pencil
330 xi	06.00 - 09.02	170	2979	6	M54 B30 (306S3)	**CL600**	6	CP003	6	year / pencil
	10.02 - 07.06	170	2979	6	M54 B30 (306S3)	**CL602**	6			year / pencil
M3 3.2	06.00 - 07.06	252	3246	6	S54 B32 (326S4)	**CL602**	6			pencil
M3 CSL 3.2	06.03 - 07.06	265	3246	6	S54 B32 (326S4)	**CL602**	6			pencil
3 Coupe (E92)										
320 i	03.07 -	125	1995	4	N43 B20 A	**CL619**	4			pencil
320 i	11.06 - 06.07	110	1995	4	N46 B20 A/N46N B20 B	**CL602**	4			pencil

BMW 3 Coupe (E92) ▶

model	year	kW	cm³	cyl	engine	coil	pcs	boot	pcs	info
BMW										
3 Coupe (E92)										
325 i	09.06 -	160	2497	6	N52 B25 A	**CL603**	6			pencil
325 i	09.07 -	160	2996	6	N53 B30 A	**CL619**	6			pencil
325 i xDrive	09.08 -	160	2996	6	N53 B30 A	**CL619**	6			pencil
325 xi	09.06 -	160	2497	6	N52 B25 A	**CL603**	6			pencil
325 xi	09.07 -	160	2996	6	N53 B30 A	**CL619**	6			pencil
330 i	09.06 -	200	2996	6	N52 B30 A	**CL603**	6			pencil / engine code
				6	N53 B30 A	**CL619**	6			pencil / engine code
330 i xDrive	09.08 -	200	2996	6	N53 B30 A	**CL619**	6			pencil
330 xi	09.06 -	200	2996	6	N52 B30 A/N53 B30 A	**CL619**	6			pencil
335 i	09.06 -	225	2979	6	N55 B30 A/N54 B30 A	**CL603**	6			pencil
335 i xDrive	09.08 -	225	2979	6	N55 B30 A/N54 B30 A	**CL603**	6			pencil
335 xi	09.06 -	225	2979	6	N55 B30 A/N54 B30 A	**CL603**	6			pencil
M 4.0	03.07 -	309	3999	8	S65 B40 A	**CL624**	8			pencil
3 Touring (E36)										
316 i	01.96 - 10.99	75	1596	4	M43 B16 (164E2)	**CL615**	1			
318 i	07.95 - 10.99	85	1796	4	M43 B18 (184E2)	**CL615**	1			
320 i	01.95 - 10.99	110	1991	6	M52 B20 (206S3)	**CL600**	6	CP003	6	pencil
323 i	09.95 - 10.99	125	2494	6	M52 B25 (256S3)	**CL600**	6	CP003	6	pencil
328 i	01.95 - 10.99	142	2793	6	M52 B28 (286S1)	**CL600**	6	CP003	6	pencil
3 Touring (E46)										
316 i	03.02 - 02.05	85	1796	4	N46 B18 A/N42 B18 A	**CL602**	4			pencil
316 i	06.02 - 02.05	85	1596	4	N45 B16 A	**CL602**	4			pencil
318 i	10.99 - 09.01	87	1895	4	M43 B19 (194E1)	**CL615**	1			
318 i	09.01 - 02.05	105	1995	4	N46 B20 A/N42 B20 A	**CL602**	4			pencil
320 i	10.99 - 09.00	110	1991	6	M52 B20 (206S4)	**CL600**	6	CP003	6	pencil
320 i	06.00 - 09.02	125	2171	6	M54 B22 (226S1)	**CL600**	6	CP003	6	year / pencil
	10.02 - 02.05	125	2171	6	M54 B22 (226S1)	**CL602**	6			year / pencil
325 i	06.00 - 09.02	141	2494	6	M54 B25 (256S5)	**CL600**	6	CP003	6	year / pencil
	10.02 - 02.05	141	2494	6	M54 B25 (256S5)	**CL602**	6			year / pencil
325 xi	06.00 - 09.02	141	2494	6	M54 B25 (256S5)	**CL600**	6	CP003	6	year / pencil
	10.02 - 02.05	141	2494	6	M54 B25 (256S5)	**CL602**	6			year / pencil
328 i	10.99 - 06.00	142	2793	6	M52 B28 (286S2)	**CL600**	6	CP003	6	pencil
330 i	06.00 - 09.02	170	2979	6	M54 B30 (306S3)	**CL600**	6	CP003	6	year / pencil
	10.02 - 02.05	170	2979	6	M54 B30 (306S3)	**CL602**	6			year / pencil
330 xi	06.00 - 09.02	170	2979	6	M54 B30 (306S3)	**CL600**	6	CP003	6	year / pencil
	10.02 - 02.05	170	2979	6	M54 B30 (306S3)	**CL602**	6			year / pencil
3 Touring (E91)										
318 i	01.06 - 06.12	95	1995	4	N46 B20 B	**CL602**	4			pencil
318 i	09.07 - 06.12	105	1995	4	N43 B20 A	**CL619**	4			pencil
320 i	09.05 - 06.12	110	1995	4	N46 B20 A/N46 B20 C	**CL602**	4			pencil
320 i	09.07 - 06.12	125	1995	4	N43 B20 A	**CL619**	4			pencil
323 i	04.06 - 06.07	130	2497	6	N52 B25 A	**CL623**	6			pencil
325 i	09.05 - 04.06	160	2497	6	N52 B25 A	**CL623**	6			year / pencil
	05.06 - 06.12	160	2497	6	N52 B25 A	**CL603**	6			year / pencil
325 i	09.07 - 06.12	160	2996	6	N53 B30 A	**CL619**	6			pencil
325 i xDrive	09.07 - 06.12	160	2996	6	N53 B30 A	**CL619**	6			pencil
325 xi	09.05 - 04.06	160	2497	6	N52 B25 A	**CL623**	6			year / pencil
	05.06 - 06.12	160	2497	6	N52 B25 A	**CL603**	6			year / pencil
325 xi	09.07 - 06.12	160	2996	6	N53 B30 A	**CL619**	6			pencil
330 i	09.05 - 04.06	190	2996	6	N52 B30 A	**CL623**	6			year / pencil
	05.06 - 08.07	190	2996	6	N52 B30 A	**CL603**	6			year / pencil
330 i	09.07 - 06.12	200	2996	6	N53 B30 A	**CL619**	6			pencil
330 i xDrive	09.07 - 06.12	200	2996	6	N53 B30 A	**CL619**	6			pencil
330 xi	09.05 - 08.07	190	2996	6	N52 B30 A	**CL623**	6			pencil
330 xi	09.07 - 06.12	200	2996	6	N53 B30 A	**CL619**	6			pencil
335 i	09.06 - 06.12	225	2979	6	N55 B30 A/N54 B30 A	**CL603**	6			pencil
335 i xDrive	09.08 - 06.12	225	2979	6	N55 B30 A/N54 B30 A	**CL603**	6			pencil
335 xi	03.07 - 06.12	225	2979	6	N55 B30 A/N54 B30 A	**CL603**	6			pencil
5 (E34)										
518 i	08.89 - 09.95	85	1796	4	M43 B18 (184E2)	**CL615**	1			
520 i 24V	09.89 - 09.95	110	1991	6	M50 B20 (206S2, _S1)	**CL601**	6	CP003	6	pencil
525 i 24V	09.89 - 09.95	141	2494	6	M50 B25 (256S2)	**CL601**	6	CP003	6	pencil
525 iX 24V	10.91 - 09.95	141	2494	6	M50 B25 (256S1, _S2)	**CL601**	6	CP003	6	pencil
530 i V8	09.92 - 09.95	160	2997	8	M60 B30 (308S1)	**CL601**	8	CP003	8	pencil
540 i V8	09.92 - 09.95	210	3982	8	M60 B40 (408S1)	**CL601**	8	CP003	8	pencil
5 (E39)										
520 i	04.99 - 06.03	100	1991	6	M52 B20 (206S3)	**CL600**	6	CP003	6	pencil
520 i	01.96 - 09.00	110	1991	6	M52 B20 (206S3)	**CL600**	6	CP003	6	pencil
520 i	09.00 - 09.02	125	2171	6	M54 B22 (226S1)	**CL600**	6	CP003	6	year / pencil
	10.02 - 06.03	125	2171	6	M54 B22 (226S1)	**CL602**	6			year / pencil

BMW 5 (E39) ▶

model	year	kW	cm³	cyl	engine	coil	pcs	boot	pcs	info
BMW										
5 (E39)										
523 i	11.95 - 09.00	125	2494	6	M52 B25 (256S3)	**CL600**	6	CP003	6	pencil
525 i	09.00 - 09.02	141	2494	6	M54 B25 (256S5)	**CL600**	6	CP003	6	year / pencil
	10.02 - 06.03	141	2494	6	M54 B25 (256S5)	**CL602**	6			year / pencil
528 i	11.95 - 09.00	142	2793	6	M52 B28 (286S1, _S2)	**CL600**	6	CP003	6	pencil
530 i	09.00 - 09.02	170	2979	6	M54 B30 (306S3)	**CL600**	6	CP003	6	year / pencil
	10.02 - 06.03	170	2979	6	M54 B30 (306S3)	**CL602**	6			year / pencil
535 i	04.96 - 03.99	173	3498	8	M62 B35 (358S1, _S2)	**CL600**	8	CP003	8	pencil
535 i	04.99 - 06.03	180	3498	8	M62 B35 (358S2)	**CL600**	8	CP003	8	pencil
540 i	04.96 - 06.03	210	4398	8	M62 B44 (448S2, _S1)	**CL600**	8	CP003	8	pencil
M 4.9	10.98 - 06.03	294	4941	8	S62 B50 (508S1)	**CL600**	8	CP003	8	pencil
5 (E60)										
520 i	07.03 - 03.10	125	2171	6	M54 B22 (226S1)	**CL602**	6			pencil
520 i	09.07 - 03.10	125	1995	4	N43 B20 A	**CL619**	4			pencil
523 i	07.05 - 04.06	130	2497	6	N52 B25 A	**CL623**	6			year / pencil
	05.06 - 03.10	130	2497	6	N52 B25 A	**CL603**	6			year / pencil
523 i	01.07 - 03.10	140	2497	6	N52 B25 A/N53 B25 A	**CL619**	6			pencil
525 i	09.03 - 03.10	141	2494	6	M54 B25 (256S5)	**CL602**	6			pencil
525 i	07.05 - 04.06	160	2497	6	N52 B25 A	**CL623**	6			year / pencil
	05.06 - 03.10	160	2497	6	N52 B25 A	**CL603**	6			year / pencil
525 i	01.07 - 03.10	160	2996	6	N53 B30 A	**CL619**	6			pencil
525 i xDrive	09.08 - 03.10	160	2996	6	N53 B30 A	**CL619**	6			pencil
525 xi	07.05 - 03.10	160	2497	6	N52 B25 A	**CL623**	6			pencil
525 xi	01.07 - 03.10	160	2996	6	N53 B30 A	**CL619**	6			pencil
530 i	07.03 - 03.10	170	2979	6	M54 B30 (306S3)	**CL602**	6			pencil
530 i	07.05 - 04.06	190	2996	6	N52 B30 A	**CL623**	6			year / pencil
	05.06 - 03.10	190	2996	6	N52 B30 A	**CL603**	6			year / pencil
530 i	01.07 - 03.10	200	2996	6	N52 B30 A/N53 B30 A	**CL619**	6			pencil
530 i xDrive	09.08 - 03.10	200	2996	6	N52 B30 A/N53 B30 A	**CL619**	6			pencil
530 xi	07.05 - 04.06	190	2996	6	N52 B30 A	**CL623**	6			year / pencil
	05.06 - 03.10	190	2996	6	N52 B30 A	**CL603**	6			year / pencil
530 xi	01.07 - 03.10	200	2996	6	N52 B30 A/N53 B30 A	**CL619**	6			pencil
540 i	07.05 - 03.10	225	4000	8	N62 B40 A	**CL602**	8			pencil
545 i	09.03 - 03.10	245	4398	8	N62 B44 A	**CL602**	8			pencil
550 i	07.05 - 03.10	270	4799	8	N62 B48 A/N62 B48 B	**CL602**	8			pencil
5 (F10, F18)										
523 i	12.09 -	150	2996	6	N53 B30 A	**CL619**	6			pencil
528 i	02.10 -	190	2996	6	N53 B30 A	**CL619**	6			pencil
550 i	02.10 -	300	4395	8	N63 B44 A	**CL603**	8			pencil
550 i xDrive	08.10 -	300	4395	8	N63 B44 A	**CL603**	8			pencil
5 Gran Turismo (F07)										
550 i	10.09 -	300	4395	8	N63 B44 A	**CL603**	8			pencil
550 i xDrive	09.10 -	300	4395	8	N63 B44 A	**CL603**	8			pencil
5 Touring (E34)										
518 g	11.95 - 06.96	85	1796	4	M43 B18 (184E2)	**CL615**	1			
518 i	09.94 - 01.97	85	1796	4	M43 B18 (184E2)	**CL615**	1			
520 i	11.91 - 01.97	110	1991	6	M50 B20 (206S2, _S1)	**CL601**	6	CP003	6	pencil
525 i	11.91 - 01.97	141	2494	6	M50 B25 (256S1, _S2)	**CL601**	6	CP003	6	pencil
525 ix	02.92 - 01.97	141	2494	6	M50 B25 (256S1, _S2)	**CL601**	6	CP003	6	pencil
530 i V8	09.92 - 01.97	160	2997	8	M60 B30 (308S1)	**CL601**	8	CP003	8	pencil
540 i	09.93 - 01.97	210	3982	8	M60 B40 (408S1)	**CL601**	8	CP003	8	pencil
5 Touring (E39)										
520 i	01.97 - 09.00	110	1991	6	M52 B20 (206S3)	**CL600**	6	CP003	6	pencil
520 i	04.99 - 05.04	100	1991	6	M52 B20 (206S3)	**CL600**	6	CP003	6	pencil
520 i	09.00 - 09.02	125	2171	6	M54 B22 (226S1)	**CL600**	6	CP003	6	year / pencil
	10.02 - 05.04	125	2171	6	M54 B22 (226S1)	**CL602**	6			year / pencil
523 i	01.97 - 09.00	125	2494	6	M52 B25 (256S3)	**CL600**	6	CP003	6	pencil
525 i	09.00 - 09.02	141	2494	6	M54 B25 (256S5)	**CL600**	6	CP003	6	year / pencil
	10.02 - 05.04	141	2494	6	M54 B25 (256S5)	**CL602**	6			year / pencil
528 i	01.97 - 09.00	142	2793	6	M52 B28 (286S1, _S2)	**CL600**	6	CP003	6	pencil
530 i	09.00 - 09.02	170	2979	6	M54 B30 (306S3)	**CL600**	6	CP003	6	year / pencil
	10.02 - 05.04	170	2979	6	M54 B30 (306S3)	**CL602**	6			year / pencil
540 i	01.97 - 05.04	210	4398	8	M62 B44 (448S2, _S1)	**CL600**	8	CP003	8	pencil
5 Touring (E61)										
520 i	09.07 -	125	1995	4	N43 B20 A	**CL619**	4			pencil
523 i	07.05 - 04.06	130	2497	6	N52 B25 A	**CL623**	6			year / pencil
	05.06 -	130	2497	6	N52 B25 A	**CL603**	6			year / pencil
523 i	01.07 -	140	2497	6	N52 B25 A/N53 B25 A	**CL619**	6			pencil
525 i	06.04 -	141	2494	6	M54 B25 (256S5)	**CL602**	6			pencil
525 i	07.05 - 04.06	160	2497	6	N52 B25 A	**CL623**	6			year / pencil
	05.06 -	160	2497	6	N52 B25 A	**CL603**	6			year / pencil

BMW 5 Touring (E61) ▶

model	year	kW	cm³	cyl	engine	coil	pcs	boot	pcs	info
BMW										
5 Touring (E61)										
525 i	01.07 -	160	2996	6	N53 B30 A	**CL619**	6			pencil
525 i xDrive	09.08 -	160	2996	6	N53 B30 A	**CL619**	6			pencil
525 xi	07.05 -	160	2497	6	N52 B25 A	**CL623**	6			pencil
525 xi	01.07 -	160	2996	6	N52 B30 A/N53 B30 A	**CL619**	6			pencil
530 i	07.05 - 04.06	190	2996	6	N52 B30 A	**CL623**	6			year / pencil
	05.06 -	190	2996	6	N52 B30 A	**CL603**	6			year / pencil
530 i	01.07 -	200	2996	6	N52 B30 A/N53 B30 A	**CL619**	6			pencil
530 i xDrive	09.08 -	200	2996	6	N52 B30 A/N53 B30 A	**CL619**	6			pencil
530 xi	07.05 - 04.06	190	2996	6	N52 B30 A	**CL623**	6			year / pencil
	05.06 -	190	2996	6	N52 B30 A	**CL603**	6			year / pencil
530 xi	01.07 -	200	2996	6	N52 B30 A/N53 B30 A	**CL619**	6			pencil
545 i	06.04 -	245	4398	8	N62 B44 A	**CL602**	8			pencil
550 i	07.05 -	270	4799	8	N62 B48 A/N62 B48 B	**CL602**	8			pencil
5 Touring (F11)										
523 i	09.10 -	150	2996	6	N53 B30 A	**CL619**	6			pencil
528 i	09.10 -	190	2996	6	N53 B30 A	**CL619**	6			pencil
6 (E63)										
630 i	09.04 - 04.06	190	2996	6	N52 B30 A	**CL623**	6			year / pencil
	05.06 -	190	2996	6	N52 B30 A	**CL603**	6			year / pencil
630 i	07.07 -	200	2996	6	N52 B30 A/_ BF/_ B/N53 B30A	**CL619**	6			pencil
645 Ci	01.04 -	245	4398	8	N62 B44 A	**CL602**	8			pencil
650 i	07.05 -	270	4799	8	N62 B48 B	**CL602**	8			pencil
6 Cabriolet (E64)										
630 i	09.04 - 04.06	190	2996	6	N52 B30 A	**CL623**	6			year / pencil
	05.06 -	190	2996	6	N52 B30 A	**CL603**	6			year / pencil
630 i	07.07 -	200	2996	6	N52 B30 A/_ BF/_ B/N53 B30A	**CL619**	6			pencil
645 Ci	04.04 -	245	4398	8	N62 B44 A	**CL602**	8			pencil
650 i	07.05 -	270	4799	8	N62 B48 B	**CL602**	8			pencil
6 Cabriolet (F12)										
650 i	03.11 -	300	4395	8	N63 B44 A	**CL603**	8			pencil
6 Coupe (F13)										
650 i	11.10 -	300	4395	8	N63 B44 A	**CL603**	8			pencil
7 (E32)										
730 i,iL V8	04.92 - 09.94	160	2997	8	M60 B30 (308S1)	**CL601**	8	CP003	8	pencil
740 i,iL V8	04.92 - 09.94	210	3982	8	M60 B40 (408S1)	**CL601**	8	CP003	8	pencil
7 (E38)										
728 i,iL	08.95 - 11.01	142	2793	6	M52 B28 (286S1, _S2)	**CL600**	6	CP003	6	pencil
730 i,iL	10.94 - 11.01	155	2997	8	M60 B30 (308S1)	**CL601**	8	CP003	8	pencil
730 i,iL	10.94 - 11.01	160	2997	8	M60 B30 (308S1)	**CL601**	8	CP003	8	pencil
735 i,iL	01.96 - 11.01	173	3498	8	M62 B35 (358S1)	**CL600**	8	CP003	8	pencil
740 i,iL	10.94 - 11.01	210	3982	8	M60 B40 (408S1)	**CL601**	8	CP003	8	pencil
740 i,iL	01.96 - 11.01	210	4398	8	M62 B44 (448S2, _S1)	**CL600**	8	CP003	8	pencil
750 i,iL	12.94 - 11.01	240	5379	12	M73 B54 (54122, _121)	**CL600**	12	CP003	12	pencil
7 (E65, E66, E67)										
730 i,Li	03.03 -	170	2979	6	M54 B30 (306S3)	**CL602**	6			pencil
730 i,Li	03.05 - 04.06	190	2996	6	N52 B30 A	**CL623**	6			year / pencil
	05.06 -	190	2996	6	N52 B30 A	**CL603**	6			year / pencil
735 i,Li	11.01 -	200	3600	8	N62 B36 A	**CL602**	8			pencil
740 i,Li	07.05 -	225	4000	8	N62 B40 A	**CL602**	8			pencil
745 i,Li	11.01 -	245	4398	8	N62 B44 A	**CL602**	8			pencil
750 i,Li	07.05 -	270	4799	8	N62 B48 B	**CL602**	8			pencil
760 i,Li	01.03 -	327	5972	12	N73 B60 A	**CL602**	12			pencil
7 (F01, F02, F03, F04)										
740 i	10.08 -	240	2979	6	N54 B30 A	**CL603**	6			pencil
750 i	10.08 -	300	4395	8	N63 B44 A	**CL603**	8			pencil
750 i xDrive	09.09 -	300	4395	8	N63 B44 A/N63 B44 B	**CL603**	8			pencil
760 i	09.09 -	400	5972	12	N74 B60 A	**CL603**	12			pencil
4.4 ActiveHybrid	10.10 -	342	4395	8	N63 B44 A	**CL603**	8			pencil
8 (E31)										
840 Ci	01.96 - 12.99	210	4398	8	M62 B44 (448S1)	**CL600**	8	CP003	8	pencil
840 i	02.93 - 02.96	210	3982	8	M60 B40 (408S1)	**CL601**	8	CP003	8	pencil
850 Ci	09.94 - 12.99	240	5379	12	M73 B54 (54121)	**CL600**	12	CP003	12	pencil
i8 (I12)										
1.5 hybrid	03.14 -	170	1499	3	B38 K15 A	**CL626**	3			pencil
X1 (E84)										
sDrive 18 i	01.10 -	110	1995	4	N46 B20 B	**CL602**	4			pencil
xDrive 25 i	01.10 -	160	2996	6	N52 B30 A	**CL603**	6			pencil
xDrive 28 i	10.09 -	190	2996	6	N52 B30 A	**CL603**	6			pencil
X3 (E83)										
2.0 i	07.05 -	110	1995	4	N46 B20 B	**CL602**	4			pencil
2.5 i	01.04 -	141	2494	6	M54 B25 (256S5)	**CL602**	6			pencil

BMW X3 (E83) ▶

model	year	kW	cm³	cyl	engine	coil	pcs	boot	pcs	info
BMW										
X3 (E83)										
2.5 si	09.06 -	160	2497	6	N52 B25 A	**CL603**	6			pencil
3.0 i xDrive	01.04 -	170	2979	6	M54 B30 (306S3)	**CL602**	6			pencil
3.0 si	09.06 -	200	2996	6	N52 B30 A	**CL603**	6			pencil
xDrive 20 i	09.08 -	110	1995	4	N46 B20 B	**CL602**	4			pencil
xDrive 25 i	09.08 -	160	2497	6	N52 B25 A	**CL603**	6			pencil
xDrive 30 i	09.08 -	200	2996	6	N52 B30 A	**CL603**	6			pencil
X3 (F25)										
xDrive 28 i	04.11 -	190	2996	6	N52 B30 A	**CL603**	6			pencil
X5 (E53)										
3.0 i	05.00 - 10.02	163	2979	6	M54 B30 (306S3)	**CL600**	6	CP003	6	year / pencil
	11.02 - 12.06	163	2979	6	M54 B30 (306S3)	**CL602**	6			year / pencil
3.0 i	05.00 - 12.06	170	2979	6	M54 B30 (306S3)	**CL600**	6	CP003	6	pencil
4.4 i	05.00 - 12.03	210	4398	8	M62 B44 (448S2)	**CL600**	8	CP003	8	pencil
4.4 i	12.03 - 09.06	235	4398	8	N62 B44/N62 B44 A	**CL602**	8			pencil
4.6 is	02.02 - 12.03	255	4619	8	M62 B46 (468S1)	**CL600**	8	CP003	8	pencil
4.8 is	04.04 - 09.06	265	4799	8	N62 B48 A	**CL602**	8			pencil
X5 (E70)										
3.0 si	02.07 - 09.08	200	2996	6	N52 B30 A	**CL603**	6			pencil
4.8 i xDrive	02.07 - 09.08	261	4799	8	N62 B48 B	**CL602**	8			pencil
M 4.4	09.09 - 06.13	408	4395	8	S63 B44 A	**CL603**	8			pencil
xDrive 30 i	09.08 - 03.10	200	2996	6	N52 B30 A	**CL603**	6			pencil
xDrive 48 i	09.08 - 06.13	261	4799	8	N62 B48 B	**CL602**	8			pencil
xDrive 50 i	06.10 - 06.13	300	4395	8	N63 B44 A	**CL603**	8			pencil
X6 (E71, E72)										
35 i	05.08 -	225	2979	6	N54 B30 A	**CL603**	6			pencil
50 i	05.08 -	300	4395	8	N63 B44 A	**CL603**	8			pencil
ActiveHybrid	10.10 -	357	4395	8	N63 B44 A	**CL603**	8			pencil
M 4.4	09.09 -	408	4395	8	S63 B44 A	**CL603**	8			pencil
xDrive 35 i	09.08 -	225	2979	6	N55 B30 A/N54 B30 A	**CL603**	6			pencil
xDrive 50 i	09.08 -	300	4395	8	N63 B44 A	**CL603**	8			pencil
Z3 (E36)										
1.8	10.95 - 10.98	85	1796	4	M43 B18 (184E2)	**CL615**	1			
1.9	10.95 - 03.99	103	1895	4	M44 B19 (194S1)	**CL615**	1			
1.9	07.98 - 01.03	87	1895	4	M43 B19 (194E1)	**CL615**	1			
1.9	01.99 - 01.03	85	1895	4	M43 B19 (194E1)	**CL615**	1			
2.0	04.99 - 01.03	110	1991	6	M52 B20 (206S4)	**CL600**	6	CP003	6	pencil
2.2	08.00 - 01.03	125	2171	6	M54 B22 (226S1)	**CL600**	6	CP003	6	pencil
2.8	04.97 - 06.00	141	2793	6	M52 B28 (286S1)	**CL600**	6	CP003	6	pencil
3.0	06.00 - 01.03	170	2979	6	M54 B30 (306S3)	**CL600**	6	CP003	6	pencil
M 3.2	03.97 - 06.01	236	3201	6	S50 B32 (326S1)	**CL600**	6	CP003	6	pencil
M 3.2	06.01 - 01.03	239	3246	6	S54 B32 (326S4)	**CL602**	6			pencil
Z3 Coupe (E36)										
2.8	07.97 - 06.00	141	2793	6	M52 B28 (286S1)	**CL600**	6	CP003	6	pencil
3.0	06.00 - 06.03	170	2979	6	M54 B30 (306S3)	**CL600**	6	CP003	6	pencil
M 3.2	02.98 - 06.01	236	3201	6	S50 B32 (326S1)	**CL600**	6	CP003	6	pencil
M 3.2	06.01 - 06.03	239	3246	6	S54 B32 (326S4)	**CL602**	6			pencil
Z4 (E85)										
2.0 i	04.05 -	110	1995	4	N46 B20 B/N46 B20 A	**CL602**	4			pencil
2.2 i	10.03 -	125	2171	6	M54 B22 (226S1)	**CL602**	6			pencil
2.5 i	02.03 -	141	2494	6	M54 B25 (256S5)	**CL602**	6			pencil
2.5 i	01.06 - 04.06	130	2497	6	N52 B25 A	**CL623**	6			year / pencil
	05.06 -	130	2497	6	N52 B25 A	**CL603**	6			year / pencil
2.5 si	01.06 - 04.06	160	2497	6	N52 B25 A	**CL623**	6			year / pencil
	05.06 -	160	2497	6	N52 B25 A	**CL603**	6			year / pencil
3.0 i	02.03 -	170	2979	6	M54 B30 (306S3)	**CL602**	6			pencil
3.0 si	01.06 - 04.06	195	2996	6	N52 B30 A	**CL623**	6			year / pencil
	05.06 -	195	2996	6	N52 B30 A	**CL603**	6			year / pencil
M 3.2	03.06 -	252	3246	6	S54 B32 (326S4)	**CL602**	6			pencil
Z4 (E89)										
sDrive 23 i	05.09 -	150	2497	6	N52 B25 A	**CL603**	6			pencil
sDrive 30 i	05.09 -	190	2996	6	N52 B30 A	**CL603**	6			pencil
sDrive 35 i	05.09 -	225	2979	6	N54 B30 A	**CL603**	6			pencil
sDrive 35 is	09.10 -	250	2979	6	N54 B30 A	**CL603**	6			pencil
Z4 Coupe (E86)										
3.0 si	03.06 - 04.06	195	2996	6	N52 B30 A	**CL623**	6			year / pencil
	05.06 -	195	2996	6	N52 B30 A	**CL603**	6			year / pencil
M 3.2	03.06 -	252	3246	6	S54 B32 (326S4)	**CL602**	6			pencil
Z8 (E52)										
4.9	06.00 - 06.03	294	4941	8	S62 B50 (508S1)	**CL600**	8	CP003	8	pencil

CADILLAC / CHEVROLET

model	year	kW	cm³	cyl	engine	coil	pcs	boot	pcs	info
CADILLAC										
CTS										
3.0	01.08 -	203	2997	6	LF1	**CL245**	6			pencil
3.0 AWD	01.08 -	203	2997	6	LF1	**CL245**	6			pencil
3.6	01.10 -	199	3564	6	LLT	**CL245**	6			pencil
3.6	09.11 -	237	3564	6	LLT	**CL245**	6			pencil
3.6	01.08 -	229	3564	6	LLT	**CL245**	6			pencil
3.6 AWD	01.10 -	199	3564	6	LLT	**CL245**	6			pencil
3.6 AWD	09.11 -	237	3564	6	LLT	**CL245**	6			pencil
3.6 AWD	01.08 -	229	3564	6	LLT	**CL245**	6			pencil
CTS Coupe										
3.0	01.10 -	201	2997	6	LF1	**CL245**	6			pencil
3.0 AWD	01.10 -	201	2997	6	LF1	**CL245**	6			pencil
3.6	01.08 -	229	3564	6	LLT	**CL245**	6			pencil
3.6	09.11 -	237	3564	6	LLT	**CL245**	6			pencil
3.6 AWD	01.08 -	229	3564	6	LLT	**CL245**	6			pencil
3.6 AWD	09.11 -	237	3564	6	LLT	**CL245**	6			pencil
CTS Sport Wagon										
3.0	01.08 -	203	2997	6	LF1	**CL245**	6			pencil
3.0 AWD	01.08 -	203	2997	6	LF1	**CL245**	6			pencil
3.6	01.08 -	229	3564	6	LLT	**CL245**	6			pencil
3.6	09.11 -	237	3564	6	LLT	**CL245**	6			pencil
3.6 AWD	01.08 -	229	3564	6	LLT	**CL245**	6			pencil
3.6 AWD	09.11 -	237	3564	6	LLT	**CL245**	6			pencil
SRX										
3.0	01.09 -	198	2996	6	LF1	**CL245**	6			pencil
3.0 AWD	01.09 -	198	2996	6	LF1	**CL245**	6			pencil
3.0 AWD	01.09 -	199	2997	6	LF1	**CL245**	6			pencil
3.6 AWD	10.12 -	234	3564	6	LFX	**CL245**	6			pencil
STS										
3.6	10.09 -	229	3564	6	LLT	**CL245**	6			pencil
3.6 AWD	10.09 -	229	3564	6	LLT	**CL245**	6			pencil
CHEVROLET										
Aveo CC (T250, T255)										
1.2	10.08 -	53	1150	4	F12S3	**CL220**	1			
1.2	04.08 -	62	1206	4	LMU/B12D1	**CL220**	1			
1.2 LPG	04.08 -	62	1206	4	LMU/B12D1	**CL220**	1			
1.4	04.08 -	74	1399	4	A 14 XER/LDT/F14D4	**CL220**	1			
Aveo CC (T300)										
1.2	03.11 -	51	1229	4	A 12 XEL	**CL238**	1			rail coil
1.2	03.11 -	63	1229	4	A 12 XER	**CL238**	1			rail coil
1.2 LPG	11.12 -	63	1229	4	A 12 XER	**CL238**	1			rail coil
1.4	03.11 -	74	1398	4	A 14 XER	**CL238**	1			rail coil
1.4 Turbo	08.13 -	103	1364	4	LUJ/LUV	**CL238**	1			rail coil
1.6	03.11 -	85	1598	4	F16D4	**CL233**	1			rail coil
Aveo Sedan (T250, T255)										
1.2	03.06 - 12.07	53	1150	4	F12S3/LQ5	**CL220**	1			
1.2	01.08 -	62	1206	4	LMU/B12D1	**CL220**	1			
1.4	03.06 - 12.07	69	1399	4	F14D3/L14	**CL220**	1			
1.4	09.08 -	74	1399	4	F14D4	**CL220**	1			
1.5	05.05 -	62	1498	4	F15S3/LX6	**CL220**	1			
Aveo Sedan (T300)										
1.2	03.11 -	51	1229	4	A 12 XEL	**CL238**	1			rail coil
1.2	03.11 -	63	1229	4	A 12 XER	**CL238**	1			rail coil
1.2 LPG	11.12 -	63	1229	4	A 12 XER	**CL238**	1			rail coil
1.4	07.11 -	74	1398	4	A 14 XER	**CL238**	1			rail coil
1.6	03.11 -	85	1598	4	F16D4	**CL233**	1			rail coil
Camaro										
3.6	01.11 -	232	3564	6	LLT	**CL245**	6			pencil
Camaro Convertible										
3.6	01.11 -	232	3564	6	LLT	**CL245**	6			pencil
Captiva (C100, C140)										
2.4	06.06 -	100	2405	4	Z 24 SED	**CL220**	1			
2.4	12.06 -	103	2405	4	Z 24 SED	**CL220**	1			
2.4	03.11 -	123	2384	4	A 24 XE/LE5	**CL237**	4			pencil
2.4 4WD	06.06 -	100	2405	4	Z 24 SED	**CL220**	1			
2.4 4WD	12.06 -	103	2405	4	Z 24 SED	**CL220**	1			
2.4 4WD	03.11 -	123	2384	4	A 24 XE/LE5	**CL237**	4			pencil
2.4 LPG	01.07 -	100	2405	4	Z 24 SED	**CL220**	1			
2.4 LPG 4WD	01.07 -	100	2405	4	Z 24 SED	**CL220**	1			
3.0 4WD	01.10 -	190	2997	6	A 30 XH/LF1	**CL245**	6			pencil
3.2 4WD	06.06 -	169	3195	6	10 HM	**CL245**	6			pencil

model	year	kW	cm³	cyl	engine	coil	pcs	boot	pcs	info
CHEVROLET										
Cruze (J300)										
1.6	05.09 -	80	1598	4	LXV/F16D3/LXT	**CL220**	1			
1.6	05.09 -	83	1598	4	F16D4	**CL220**	1			
1.6	05.09 -	91	1598	4	LDE/F16D4	**CL220**	1			
1.8	05.09 -	104	1796	4	2H0/F18D4	**CL241**	1			rail coil
Cruze CC (J305)										
1.4	06.12 -	103	1362	4	LUJ	**CL238**	1			rail coil
1.8	06.11 -	104	1796	4	F18D4	**CL241**	1			rail coil
1.8 LPG	06.11 -	104	1796	4	F18D4	**CL241**	1			rail coil
Cruze Station Wagon (J308)										
1.4	08.12 -	103	1362	4	LUJ	**CL238**	1			rail coil
1.8	08.12 -	104	1796	4	2H0	**CL241**	1			rail coil
Epica (KL1_)										
2.0	06.06 -	105	1993	6	X 20 D1	**CL234**	6			pencil
2.5	06.06 -	115	2492	6	LF4	**CL234**	6			pencil
Evanda										
2.0	03.05 -	96	1998	4	X 20 SED	**CL220**	1			
Kalos										
1.2	03.05 -	53	1150	4	B12S1	**CL220**	1			
1.4	03.05 -	61	1399	4	F14S3	**CL220**	1			
1.4 16V	03.05 -	69	1399	4	F14D3	**CL220**	1			
Kalos Sedan										
1.2	03.05 -	53	1150	4	F12S3	**CL220**	1			
1.4	03.05 -	61	1399	4	F14S3	**CL220**	1			
1.4 16V	03.05 -	69	1399	4	F14D3	**CL220**	1			
Lacetti (J200)										
1.4 16V	03.05 -	70	1399	4	F14D3	**CL225**	1			
1.6	03.05 -	80	1598	4	F16D3	**CL225**	1			
1.8	08.05 -	89	1796	4	F18D3	**CL220**	1			
1.8	03.05 -	90	1799	4	T18SED	**CL220**	1			
Lanos Sedan										
1.5	11.05 -	63	1498	4	A15SMS	**CL201**	1			
Matiz (M200, M250)										
0.8	03.05 -	38	796	3	F8CV	**CL216**	1			
0.8 LPG	03.05 -	38	796	3	F8CV	**CL216**	1			
1.0	03.05 -	47	995	4	B10S	**CL220**	1			
1.0	03.05 -	49	995	4	B10S1	**CL220**	1			
1.0 LPG	03.05 -	49	995	4	B10S1	**CL220**	1			
Nubira Combi										
1.6	03.05 -	80	1598	4	F16D3	**CL225**	1			
1.8	03.05 -	90	1799	4	T18SED	**CL220**	1			
Nubira Sedan										
1.4	01.05 -	69	1399	4	F14D3	**CL225**	1			
1.4	01.06 -	70	1399	4	F14D3	**CL225**	1			
1.6	03.05 -	80	1598	4	F16D3	**CL225**	1			
1.8	03.05 -	90	1799	4	T18SED	**CL220**	1			
Orlando (J309)										
1.4	06.12 -	103	1362	4	LUJ	**CL238**	1			rail coil
1.8	02.11 -	104	1796	4	2H0/F18D4	**CL241**	1			rail coil
Spark										
0.8	05.05 -	37	796	3	F8CV	**CL216**	1			
0.8	09.00 - 12.04	38	796	3	F8CV	**CL216**	1			
1.0 SX	05.05 -	46	995	4	LA2/B10S	**CL220**	1			
1.0 SX	05.05 -	49	995	4	B10S1	**CL220**	1			
Spark (M300)										
1.0	03.10 -	50	995	4	B10D1	**CL220**	1			
1.2	03.10 -	60	1206	4	LMU/B12D1	**CL220**	1			
Tacuma										
1.6	03.05 -	77	1598	4	A16DMS	**CL220**	1			
1.6	08.05 -	79	1598	4	A16DMS	**CL220**	1			
2.0	03.05 -	89	1998	4	T20SED	**CL220**	1			
2.0	08.05 -	90	1998	4	T20SED	**CL220**	1			
Trax										
1.4	12.12 -	103	1364	4	LUJ/LUV	**CL238**	1			rail coil
1.4 AWD	12.12 -	103	1364	4	LUJ	**CL238**	1			rail coil
1.4 LPG	04.13 -	103	1364	4	A 14 NET/B 14 NET	**CL238**	1			rail coil
CHRYSLER										
300 C (LX)										
2.7	01.07 - 11.12	130	2736	6	EES	**CL721**	6	CP065	6	pencil
2.7	09.04 - 12.05	142	2736	6	2.7FX/EER	**CL722**	6	CP067	6	year / pencil
	01.06 - 11.12	142	2736	6	2.7FX/EER	**CL721**	6	CP065	6	year / pencil

CHRYSLER 300 C (LX) ▶

model	year	kW	cm³	cyl	engine	coil	pcs	boot	pcs	info
CHRYSLER										
300 C (LX)										
3.5	09.04 - 12.05	183	3518	6	3.5CSP	**CL720**	6	CP067	6	year / pencil
	01.06 - 11.12	183	3518	6	3.5CSP	**CL721**	6	CP065	6	year / pencil
5.7	01.06 - 12.08	250	5654	8	EZH/EZD/EZB	**CL718**	8	CP064	16	pencil / twin coil
6.1 SRT8	06.05 - 11.12	317	6059	8	ESF	**CL718**	8	CP064	16	pencil / twin coil
300 C Touring (LX)										
2.7	01.07 - 12.10	130	2736	6	EES	**CL721**	6	CP065	6	pencil
2.7	09.04 - 12.05	142	2736	6	2.7FX/EER	**CL722**	6	CP067	6	year / pencil
	01.06 - 12.10	142	2736	6	2.7FX/EER	**CL721**	6	CP065	6	year / pencil
3.5	09.04 - 12.05	183	3518	6	3.5CSP/EEG	**CL720**	6	CP067	6	year / pencil
	01.06 - 12.10	183	3518	6	3.5CSP/EEG	**CL721**	6	CP065	6	year / pencil
3.5 AWD	09.04 - 12.05	183	3518	6	3.5CSP	**CL720**	6	CP067	6	year / pencil
	01.06 - 12.10	183	3518	6	3.5CSP	**CL721**	6	CP065	6	year / pencil
5.7	01.06 - 12.10	250	5654	8	EZH/EZD/EZB	**CL718**	8	CP064	16	pencil / twin coil
5.7 AWD	04.05 - 12.10	250	5654	8	EZH/EZB	**CL718**	8	CP064	16	pencil / twin coil
6.1 SRT8	06.05 - 12.10	317	6059	8	ESF	**CL718**	8	CP064	16	pencil / twin coil
300 M (LR)										
2.7 V6 24V	11.98 - 08.00	149	2736	6	EER	**CL722**	6	CP067	6	pencil
2.7 V6 24V	08.00 - 09.04	150	2736	6	EER	**CL722**	6	CP067	6	pencil
3.5 V6 24V	08.00 - 09.04	185	3518	6	EGG	**CL720**	6	CP067	6	pencil
3.5 V6 24V	07.98 - 08.00	187	3518	6	EGG	**CL720**	6	CP067	6	pencil
Concorde										
2.7 LX	10.97 - 09.03	149	2736	6	EER	**CL722**	6	CP067	6	pencil
3.5 LX	10.97 - 09.03	174	3518	6	EWZ	**CL720**	6	CP067	6	pencil
3.5 LX Supercharged	10.97 - 09.03	186	3518	6	EWZ	**CL720**	6	CP067	6	pencil
Crossfire										
3.2	07.03 - 12.08	160	3199	6	EGX	**CL605**	3			twin coil
3.2 SRT-6	09.04 - 12.07	246	3199	6	EGZ	**CL605**	3			twin coil
Crossfire Roadster										
3.2	05.04 - 12.08	160	3199	6	EGX	**CL605**	3			twin coil
3.2 SRT-6	09.04 - 12.06	246	3199	6	EGZ	**CL605**	3			twin coil
Daytona Coupe										
2.2 i Turbo	09.86 - 12.90	130	2213	4	EDR	**CL712**	1			
2.5 i Turbo	01.89 - 10.92	110	2501	4	EDT	**CL712**	1			
Neon II										
2.0 16V R/T	10.01 - 12.06	110	1996	4	ECH	**CL706**	1			
PT Cruiser (PT_)										
1.6	11.01 - 12.10	85	1598	4	EJD	**CL706**	1			
2.0	10.04 - 12.10	100	1996	4	ECC	**CL706**	1			
2.0	06.00 - 12.10	104	1996	4	ECC	**CL706**	1			
2.4	08.05 - 12.10	105	2429	4	EDZ	**CL706**	1			
2.4	06.00 - 12.10	110	2429	4	EDZ	**CL706**	1			
PT Cruiser Cabriolet										
2.4	03.04 - 03.08	105	2429	4	EDZ	**CL706**	1			
Sebring (JR)										
2.0	04.01 - 06.07	104	1996	4	ECC	**CL706**	1			
2.7 V6 24V	04.01 - 06.07	149	2736	6	EER/EES	**CL722**	6	CP067	6	pencil
Sebring (JS)										
2.0 VVT	07.07 - 12.10	115	1998	4	ECN			CP066	4	
2.4 VVT	07.07 - 12.10	125	2360	4	EDG/ED3			CP066	4	
Sebring Cabriolet (JR)										
2.0	04.01 - 06.07	104	1996	4	ECC	**CL706**	1			
2.7 V6 24V	04.01 - 06.07	149	2736	6	EES	**CL722**	6	CP067	6	pencil
Sebring Cabriolet (JS)										
2.4 VVT	07.07 - 12.10	125	2360	4	ED3			CP066	4	
2.7	07.07 - 12.10	137	2736	6	EER	**CL721**	6	CP065	6	pencil
Stratus (JA)										
2.0 LE	12.95 - 04.01	96	1996	4	C00	**CL706**	1			
Stratus Cabriolet (JX)										
2.0 LE	06.96 - 04.01	96	1996	4	420X	**CL706**	1			
Voyager II (ES)										
2.5 i	08.90 - 09.95	74	2501	4	K	**CL712**	1			
Voyager III (GS)										
2.4 i	01.95 - 03.01	111	2429	4	B00	**CL706**	1			
Voyager IV (RG, RS)										
2.4	02.00 - 12.08	108	2429	4	EDZ	**CL706**	1			
CITROEN										
AX (ZA_)										
10	09.86 - 06.92	32	954	4	C1A	**CL108**	1			
10	07.86 - 12.90	33	954	4	CDY (TU9M)	**CL108**	1			coil 1xSAE / year
	01.91 - 12.91	33	954	4	CDY (TU9M)	**CL109**	1			coil 1xSAE / year
	01.92 - 12.98	33	954	4	CDY (TU9M)	**CL106**	1			coil 4xPIN / year

CITROEN AX (ZA_) ▶

model	year	kW	cm³	cyl	engine	coil	pcs	boot	pcs	info
CITROEN										
AX (ZA_)										
10	02.87 - 12.98	37	954	4	CDZ (TU9M)	**CL106**	1			
10 E	12.86 - 12.88	30	954	4	C3A	**CL108**	1			
11	12.86 - 04.94	40	1124	4	H1A/H1B	**CL108**	1			
11	09.86 - 04.92	44	1124	4	HDZ (TU1M)/H1B	**CL109**	1			coil 1xSAE / year
	05.92 - 12.97	44	1124	4	HDZ (TU1M)/H1B	**CL106**	1			coil 4xPIN / year
11 4x4	06.91 - 07.92	40	1124	4	H1A	**CL108**	1			
11 cat	09.88 - 12.89	40	1124	4	HAZ (TU1CP)	**CL108**	1			
14	12.86 - 12.88	44	1360	4	KAY (TU3CP)	**CL108**	1			
14	06.88 - 12.89	49	1360	4	K1F	**CL108**	1			
14	04.87 - 01.93	55	1360	4	KDY/KDZ /KDX	**CL108**	1			coil 1xSAE / year
	01.93 - 04.97	55	1360	4	KDY (TU3FM)/KDX (TU3M/Z)	**CL106**	1			coil 4xPIN / year
14	01.88 - 12.92	62	1360	4	K2B/K2A	**CL108**	1			
14 4x4	08.91 - 01.93	55	1360	4	KDY/KDZ /KDX	**CL108**	1			coil 1xSAE / year
	01.93 - 12.96	55	1360	4	KDY (TU3FM)/KDX (TU3M/Z)	**CL106**	1			coil 4xPIN / year
1.3 Sport	04.87 - 12.88	70	1294	4	M4A	**CL108**	1			
1.4 GTi	08.91 - 12.96	66	1360	4	KFY (TU3FJ2)	**CL106**	1			
1.4 GTi	06.91 - 12.96	69	1360	4	KFZ (TU3FJ2)	**CL106**	1			
1.4 GTi	06.91 - 12.92	74	1360	4	KFZ (TU3FJ2)	**CL106**	1			
Berlingo (B9)										
1.6	04.08 -	66	1587	4	NFR (TU5JP4B)	**CL104**	1	CP068	4	rail coil
1.6	04.08 -	80	1587	4	NFU (TU5JP4)	**CL104**	1	CP068	4	rail coil
1.6 VTi 120	11.09 -	88	1598	4	5FS (EP6C)	**CL603**	4			pencil
1.6 VTi 95	07.10 -	72	1598	4	5FK (EP6CB)	**CL603**	4			pencil
Berlingo (MF)										
1.1 i	07.96 -	44	1124	4	HDZ (TU1M)	**CL107**	1			
1.4 i	07.96 -	55	1360	4	KFX (TU3JP)/KFW (TU3JP)	**CL107**	1			coil 4xPIN / year
	06.98 -	55	1360	4	KFX (TU3JP)/KFW (TU3JP)	**CL120**	1	CP069	4	1st rail coil / year
	09.00 -	55	1360	4	KFX (TU3JP)/KFW (TU3JP)	**CL111**	1	CP069	4	2nd rail coil / year
	09.05 -	55	1360	4	KFX (TU3JP)/KFW (TU3JP)	**CL110**	1	CP069	4	3rd rail coil / year
1.6 16V	10.00 -	80	1587	4	NFU (TU5JP4)	**CL104**	1	CP068	4	rail coil
1.8 i	05.97 -	66	1761	4	LFX (XU7JB)	**CL107**	1			
1.8 i 4WD	04.97 -	66	1761	4	LFX (XU7JB)	**CL107**	1			
Berlingo Van (B9)										
1.6	04.08 -	66	1587	4	NFR (TU5JP4B)	**CL104**	1	CP068	4	rail coil
1.6	04.08 -	80	1587	4	NFU (TU5JP4)	**CL104**	1	CP068	4	rail coil
1.6 VTi 120	11.09 -	88	1598	4	5FS (EP6C)	**CL603**	4			pencil
1.6 VTi 95	07.10 -	72	1598	4	5FK (EP6CB)	**CL603**	4			pencil
Berlingo Van (M_)										
1.1 i	07.96 -	44	1124	4	HDZ (TU1M)/HFX (TU1JP)	**CL107**	1			
1.4 i	07.96 -	55	1360	4	KFX (TU3JP)/KFW (TU3JP)	**CL107**	1			coil 4xPIN / year
	06.98 -	55	1360	4	KFX (TU3JP)/KFW (TU3JP)	**CL120**	1	CP069	4	1st rail coil / year
	09.00 -	55	1360	4	KFX (TU3JP)/KFW (TU3JP)	**CL111**	1	CP069	4	2nd rail coil / year
	09.05 -	55	1360	4	KFX (TU3JP)/KFW (TU3JP)	**CL110**	1	CP069	4	3rd rail coil / year
1.6 16V	10.00 -	80	1587	4	NFU (TU5JP4)	**CL104**	1	CP068	4	rail coil
1.8 i	08.99 - 10.02	66	1761	4	LFX (XU7JB)	**CL107**	1			
BX (XB_)										
11	10.88 - 06.92	40	1124	4	HDZ (TU1M)	**CL108**	1			
14	01.89 - 02.93	55	1360	4	KDZ (TU3M/Z)/KDY (TU3M)	**CL108**	1			
15	10.87 - 05.92	59	1580	4	B1E (XU51C)	**CL114**	1			
16	01.87 - 02.93	53	1580	4	B1E (XU51C)	**CL114**	1			
16	09.89 - 02.93	55	1580	4	BAZ (XU5CP)/BAY (XU5CP)	**CL114**	1			
16	07.85 - 02.93	64	1580	4	171D	**CL114**	1			
16	03.86 - 02.93	76	1580	4	180Z	**CL108**	1			
16 E	09.89 - 03.91	65	1580	4	BDY (XU5M)/BDZ (XU5M)	**CL114**	1			coil 1xSAE / year
	03.91 - 02.93	65	1580	4	BDY (XU5M)/BDZ (XU5M)	**CL107**	1			coil 4xPIN / year
19	09.86 - 11.89	70	1905	4	D2C (XU92C)	**CL114**	1			
19	07.86 - 05.89	75	1905	4	159A	**CL114**	1			
19 E	06.88 - 02.93	80	1905	4	DDZ (XU9M)	**CL114**	1			
19 E 4x4	04.89 - 02.93	80	1905	4	D2F	**CL114**	1			
19 GTi	06.88 - 02.93	88	1905	4	DKZ (XU9JA)	**CL114**	1			
19 GTi	07.86 - 02.93	90	1905	4	D6A (XU9J2)	**CL114**	1			
19 GTi 16V	03.88 - 02.93	108	1905	4	DFW (XU9J4)	**CL114**	1			
19 GTi 16V	09.87 - 12.88	116	1905	4	D6C (XU9J4)	**CL114**	1			
19 GTi 4x4	06.88 - 02.93	88	1905	4	DKZ (XU9JA)	**CL114**	1			
BX Break (XB_)										
14	01.86 - 02.93	53	1360	4	150C	**CL108**	1			
14	01.89 - 02.93	55	1360	4	KDY (TU3M)	**CL108**	1			
15	04.88 - 05.92	59	1580	4	B1E (XU51C)	**CL114**	1			
16	09.88 - 12.94	53	1580	4	B1E (XU51C)	**CL114**	1			
16	07.85 - 12.94	64	1580	4	171D	**CL114**	1			

CITROEN BX Break (XB_) ▶

model	year	kW	cm³	cyl	engine	coil	pcs	boot	pcs	info
CITROEN										
BX Break (XB_)										
16	05.89 - 03.91	65	1580	4	BDY (XU5M)/BDZ (XU5M)	**CL114**	1			coil 1xSAE / year
	03.91 - 12.94	65	1580	4	BDY (XU5M)/BDZ (XU5M)	**CL107**	1			coil 4xPIN / year
16	03.86 - 12.94	76	1580	4	180Z	**CL108**	1			
19	12.87 - 12.89	70	1905	4	D2C (XU92C)	**CL114**	1			
19	06.88 - 04.90	80	1905	4	DDZ (XU9M)	**CL114**	1			coil 1xSAE / year
	04.90 - 12.94	80	1905	4	DDZ (XU9M)	**CL107**	1			coil 4xPIN / year
19	06.88 - 12.94	88	1905	4	DKZ (XU9JA)	**CL114**	1			
19 4x4	10.90 - 05.91	80	1905	4	DDZ (XU9M)	**CL107**	1			
C1 (PM_, PN_)										
1.0	06.05 -	50	998	3	1KR-FE	**CL555**	3	CP042	3	pencil
C1 II										
1.2 VTi 82	04.14 -	60	1199	3	HMT (EB2D)	**CL157**	3			pencil
C15 (VD_)										
1.0	10.84 - 12.97	33	954	4	XV8/TU9	**CL108**	1			
1.0 E	11.92 - 07.96	37	954	4	TU9K	**CL108**	1			
1.1	11.88 - 07.96	40	1124	4	H1A	**CL108**	1			
1.1 i	07.88 - 12.96	44	1124	4	HDZ (TU1M)	**CL108**	1			
1.3	07.87 - 05.88	47	1294	4	G1A	**CL114**	1			
1.4	07.87 - 12.96	49	1360	4	K1H (TU3A)	**CL108**	1			
1.4 E	07.87 - 12.96	40	1360	4	K3A	**CL108**	1			
1.4 E	05.87 - 12.96	44	1360	4	150D (XY7)	**CL108**	1			
1.4 i	05.91 - 12.96	55	1360	4	KDY (TU3FM)/KDY (TU3M)	**CL108**	1			
C15 Combi										
1.1	10.88 - 10.92	40	1124	4	HDZ (TU1M)	**CL108**	1			
1.1	08.88 - 07.96	44	1124	4	HDZ (TU1M)	**CL108**	1			
1.4	05.87 - 09.92	49	1360	4		**CL108**	1			
1.4	05.87 - 10.92	44	1360	4	150D (XY7)	**CL108**	1			
1.4	05.91 - 07.96	55	1360	4	KDY (TU3M)	**CL108**	1			
C2 (JM_)										
1.1	09.03 -	44	1124	4	HFX (TU1JP)	**CL111**	1	CP069	4	rail coil
1.4	09.03 -	54	1360	4	KFV (TU3JP)	**CL111**	1	CP069	4	1st rail coil OEM No. 5970.78
						CL120	1	CP069	4	2nd rail coil OEM No. 5970.90
1.4 16V	06.06 -	65	1360	4	KFU (ET3J4)	**CL151**	1			rail coil
1.6	09.03 -	80	1587	4	NFU (TU5JP4)	**CL104**	1	CP068	4	rail coil
1.6 VTS	01.05 -	90	1587	4	NFS (TU5JP4S)	**CL104**	1	CP068	4	rail coil
C3 I (FC_)										
1.1 i	02.02 -	44	1124	4	HFX (TU1A)/HFX (TU1JP)	**CL111**	1	CP069	4	rail coil
1.4 16V	12.03 -	65	1360	4	KFU (ET3J4)	**CL111**	1	CP069	4	1st rail coil OEM No. 5970.78
						CL151	1			2nd rail coil OEM No. 5970.85
1.4 i Bivalent	02.02 -	54	1360	4	KFV (TU3JP)	**CL111**	1	CP069	4	rail coil
1.6 16V	02.02 -	80	1587	4	NFU (TU5JP4)	**CL104**	1	CP068	4	rail coil
C3 II										
1.0 VTi 68	08.12 -	50	999	3	ZMZ (EB0)	**CL157**	3			pencil
1.1	11.09 -	44	1124	4	HFX (TU1JP)	**CL120**	1	CP069	4	rail coil
1.2 VTi 82	06.12 -	60	1199	3	HMZ (EB2F)	**CL157**	3			pencil
1.4	11.09 -	54	1360	4	KFT (TU3A)/KFV (TU3A)	**CL120**	1	CP069	4	rail coil
1.4 VTi 95	11.09 -	70	1397	4	8FP (EP3)	**CL603**	4			pencil
1.6 VTi 120	11.09 -	88	1598	4	5FS (EP6C)	**CL603**	4			pencil
C3 Picasso										
1.2 THP 110	01.15 -	81	1199	3	HNZ (EB2DT)	**CL158**	3			pencil
1.4 VTi 95	02.09 -	70	1397	4	8FS /8FN (EP3)/8FP (EP3)	**CL603**	4			pencil
1.6 VTi 120	02.09 -	88	1598	4	5FS (EP6C)/5FW (EP6)	**CL603**	4			pencil
C3 Pluriel (HB_)										
1.4	05.03 -	54	1360	4	KFV (TU3JP)	**CL111**	1	CP069	4	1st rail coil OEM No. 5970.78
						CL120	1	CP069	4	2nd rail coil OEM No. 5970.90
1.6	05.03 -	80	1587	4	NFU (TU5JP4)	**CL104**	1	CP068	4	rail coil
C4 AirCross										
1.6	04.12 -	86	1590	4	4A92	**CL929**	4			pencil
C4 Cactus										
1.2 THP 110	09.14 -	81	1199	3	HNZ (EB2DT)	**CL158**	3			pencil
1.2 VTi 75	09.14 -	55	1199	3	HMU (EB2D)	**CL157**	3			pencil
1.2 VTi 82	09.14 -	60	1199	3	HMZ (EB2F)	**CL157**	3			pencil
C4 Coupe (LA_)										
1.4 16V	11.04 - 07.11	65	1360	4	KFU (ET3J4)	**CL151**	1			rail coil
1.6 16V	11.04 - 07.11	80	1587	4	NFU (TU5JP4)	**CL104**	1	CP068	4	rail coil
1.6 THP 150	07.08 - 07.11	110	1598	4	5FX (EP6DT)	**CL603**	4			pencil
1.6 VTi 120	07.08 - 07.11	88	1598	4	5FW (EP6)	**CL603**	4			pencil
2.0 16V	11.04 - 07.07	100	1997	4	RFN (EW10J4)	**CL112**	1	CP073	4	rail coil
2.0 16V	11.04 - 12.10	130	1997	4	RFK (EW10J4S)	**CL133**	1	CP073	4	rail coil
C4 Grand Picasso I (UA_)										
1.6 16V	07.08 -	103	1598	4	5FT (EP6DT)	**CL603**	4			pencil

CITROEN C4 Grand Picasso I (UA_) ▶

model	year	kW	cm³	cyl	engine	coil	pcs	boot	pcs	info
CITROEN										
C4 Grand Picasso I (UA_)										
1.6 16V	10.08 -	110	1598	4	5FX (EP6DT)	**CL603**	4			pencil
1.6 THP 155	09.10 -	115	1598	4	5FV (EP6CDT)	**CL603**	4			pencil
1.6 VTi 120	07.08 -	88	1598	4	5FW (EP6)	**CL603**	4			pencil
1.8 i 16V	10.06 -	92	1749	4	6FY (EW7A)	**CL138**	1			rail coil
2.0 i 16V	10.06 -	103	1997	4	RFJ (EW10A)	**CL138**	1			rail coil
C4 Grand Picasso II										
1.2 THP 130	04.14 -	96	1199	3	HNY (EB2DTS)	**CL158**	3			pencil
1.6 VTi 120	09.13 -	88	1598	4	5FS (EP6C)	**CL603**	4			pencil
C4 I (LC_)										
1.4 16V	11.04 - 07.11	65	1360	4	KFU (ET3J4)	**CL151**	1			rail coil
1.6 16V	11.04 - 07.11	80	1587	4	NFU (TU5JP4)	**CL104**	1	CP068	4	rail coil
1.6 16V Bio-Flex	09.07 - 07.08	80	1587	4	NFU (TU5JP4)	**CL104**	1	CP068	4	rail coil
1.6 THP 140	07.08 - 07.11	103	1598	4	5FT (EP6DT)	**CL603**	4			pencil
1.6 THP 150	07.08 - 07.11	110	1598	4	5FX (EP6DT)	**CL603**	4			pencil
1.6 VTi 120	07.08 - 07.11	88	1598	4	5FW (EP6)	**CL603**	4			pencil
2.0 16V	11.04 - 07.07	100	1997	4	RFN (EW10J4)	**CL112**	1	CP073	4	rail coil
2.0 16V	11.04 - 07.11	103	1997	4	RFJ (EW10A)	**CL138**	1			rail coil
2.0 16V	11.04 - 07.08	130	1997	4	RFK (EW10J4S)	**CL133**	1	CP073	4	rail coil
C4 II (B7)										
1.2 THP 130	04.14 -	96	1199	3	HNY (EB2DTS)	**CL158**	3			pencil
1.4 VTi 95	11.09 -	70	1397	4	8FP (EP3)	**CL603**	4			pencil
1.6 THP 155	11.09 -	115	1598	4	5FV (EP6CDT)	**CL603**	4			pencil
1.6 VTi 120	11.09 -	88	1598	4	5FS (EP6C)	**CL603**	4			pencil
1.6 VTi 120 LPG	09.11 -	88	1598	4	5FS (EP6C)	**CL603**	4			pencil
C4 Picasso I (UD_)										
1.6 16V	07.08 - 08.13	110	1598	4	5FX (EP6DT)	**CL603**	4			pencil
1.6 THP 140	07.08 - 08.13	103	1598	4	5FT (EP6DT)	**CL603**	4			pencil
1.6 THP 155	09.10 - 08.13	115	1598	4	5FV (EP6CDT)	**CL603**	4			pencil
1.6 VTi 120	07.08 - 08.13	88	1598	4	5FW (EP6)	**CL603**	4			pencil
1.8 i 16V	02.07 - 12.11	92	1749	4	6FY (EW7A)	**CL138**	1			rail coil
2.0 i 16V	02.07 - 08.13	103	1997	4	RFJ (EW10A)	**CL138**	1			rail coil
C4 Picasso II										
1.2 THP 130	04.14 -	96	1199	3	HNY (EB2DTS)	**CL158**	3			pencil
1.6 VTi 120	02.13 -	88	1598	4	5FS (EP6C)	**CL603**	4			pencil
1.6 THP 155	02.13 -	115	1598	4	5FV (EP6CDT)	**CL603**	4			pencil
C5 I (DC_)										
1.8 16V	03.01 - 08.04	85	1749	4	6FZ (EW7J4)	**CL112**	1	CP073	4	rail coil
2.0 16V	03.01 - 08.04	100	1997	4	RFN (EW10J4)	**CL112**	1	CP073	4	1st rail coil OEM No. 5970.75
						CL138	1			2nd rail coil OEM No. 5970.87
3.0 V6	03.01 - 08.04	152	2946	6	XFX (ES9J4S)	**CL135**	6			pencil
C5 I Break (DE_)										
1.8 16V	06.01 - 08.04	85	1749	4	6FZ (EW7J4)	**CL112**	1	CP073	4	rail coil
2.0 16V	06.01 - 08.04	100	1997	4	RFN (EW10J4)	**CL112**	1	CP073	4	1st rail coil OEM No. 5970.75
						CL138	1			2nd rail coil OEM No. 5970.87
3.0 Carlsson	09.03 - 08.04	173	2946	6		**CL135**	6			pencil
3.0 V6	06.01 - 08.04	152	2946	6	XFX (ES9J4S)	**CL135**	6			pencil
C5 II (RC_)										
1.8 16V	09.05 -	92	1749	4	6FY (EW7A)	**CL138**	1			rail coil
1.8 16V	09.04 -	85	1749	4	6FZ (EW7J4)	**CL112**	1	CP073	4	rail coil
2.0 16V	09.04 -	103	1997	4	RFJ (EW10A)	**CL138**	1			rail coil
3.0 V6	09.04 -	152	2946	6	XFU (ES9A)/XFX (ES9J4S)	**CL135**	6			pencil
C5 II Break (RE_)										
1.8 16V	09.05 -	92	1749	4	6FY (EW7A)	**CL138**	1			rail coil
1.8 16V	09.04 -	85	1749	4	6FZ (EW7J4)	**CL112**	1	CP073	4	rail coil
2.0 16V	09.04 -	103	1997	4	RFJ (EW10A)	**CL138**	1			rail coil
3.0 V6	09.04 -	152	2946	6	XFU (ES9A)	**CL135**	6			pencil
C5 III (RD_)										
1.6 THP 155	04.09 -	115	1598	4	5FV (EP6CDT)	**CL603**	4			pencil
1.6 VTi 120	07.10 -	88	1598	4	5FS (EP6C)	**CL603**	4			pencil
1.8 16V	02.08 -	92	1749	4	6FY (EW7A)	**CL138**	1			rail coil
2.0 16V	02.08 -	103	1997	4	RFJ (EW10A)	**CL138**	1			rail coil
3.0 V6	02.08 -	155	2946	6	XFU (ES9A)	**CL135**	6			pencil
C5 III Break (TD_)										
1.6 THP 155	04.09 -	115	1598	4	5FV (EP6DT)	**CL603**	4			pencil
1.6 VTI 120	07.10 -	88	1598	4	5FS (EP6C)	**CL603**	4			pencil
1.8 16V	02.08 -	92	1749	4	6FY (EW7A)	**CL138**	1			rail coil
2.0 16V	02.08 -	103	1997	4	RFJ (EW10A)	**CL138**	1			rail coil
3.0 V6	02.08 -	155	2946	6	XFU (ES9A)	**CL135**	6			pencil
C6 (TD_)										
3.0 V6	09.05 -	155	2946	6	XFV (ES9A)/XFX (ES9J4S)	**CL135**	6			pencil

model	year	kW	cm³	cyl	engine	coil	pcs	boot	pcs	info
CITROEN										
C8 (EA_, EB_)										
2.0	07.02 -	100	1997	4	RFN (EW10J4)	**CL112**	1	CP073	4	rail coil
2.0 16V	09.05 -	103	1997	4	RFJ (EW10A)	**CL138**	1			rail coil
2.2	07.02 -	116	2230	4	3FZ (EW12J4)	**CL133**	1	CP073	4	1st rail coil OEM No. 5970.84
						CL139	1	CP073	4	2nd rail coil OEM No. 5970.92
3.0 V6	07.02 -	150	2946	6	XFX (ES9J4S)	**CL135**	6			pencil
C-Crosser (EP_)										
2.4 16V	08.08 -	125	2360	4	SFZ (4B12-MMC)	**CL927**	4			pencil
C-Crosser Enteprise										
2.4 16V	01.09 -	125	2360	4	4B12	**CL927**	4			pencil
C-Elysee										
1.2 VTi 72	11.12 -	53	1199	3	HMY (EB2M)	**CL157**	3			pencil
1.6 VTi 115	11.12 -	85	1587	4	NFP (EC5)	**CL156**	1			rail coil
DS3										
1.2 VTi 82	01.13 -	60	1199	3	HMZ (EB2F)	**CL157**	3			pencil
1.2 VTi 110	10.14 -	81	1199	3	HNZ (EB2DT)	**CL157**	3			pencil
1.4 VTi 95	04.10 -	70	1397	4	8FP (EP3)	**CL603**	4			pencil
1.4 VTi 98	11.09 -	72	1397	4	8FR (EP3)	**CL603**	4			pencil
1.6 THP 155	04.10 -	115	1598	4	5FV (EP6CDT)/5FR (EP6DT)	**CL603**	4			pencil
1.6 VTi 120	04.10 -	88	1598	4	5FS (EP6C)	**CL603**	4			pencil
DS3 Cabriolet										
1.2 VTi 82	01.13 -	60	1199	3	HMZ (EB2F)	**CL157**	3			pencil
1.2 VTi 110	10.14 -	81	1199	3	HNZ (EB2DT)	**CL157**	3			pencil
1.6 THP 150	01.13 -	110	1598	4	5FN (EP6CDT)	**CL603**	4			pencil
1.6 THP 155	01.13 -	115	1598	4	5FV (EP6CDT)	**CL603**	4			pencil
1.6 VTi 120	01.13 -	88	1598	4	5FS (EP6C)	**CL603**	4			pencil
DS4										
1.6 THP 155	04.11 -	115	1598	4	5FV (EP6CDT)	**CL603**	4			pencil
1.6 THP 200	04.11 -	147	1598	4	5FU (EP6DTX)	**CL603**	4			pencil
1.6 VTi 120	04.11 -	88	1598	4	5FS (EP6C)	**CL603**	4			pencil
1.6 THP 155	11.11 -	115	1598	4	5FV (EP6CDT)	**CL603**	4			pencil
1.6 THP 200	11.11 -	147	1598	4	5FU (EP6DTX)	**CL603**	4			pencil
Evasion (22, U6)										
1.8	05.97 - 07.02	73	1761	4	LFZ (XU7JP)	**CL107**	1			
2.0	06.94 - 07.02	89	1998	4	RFU (XU10J2/C)	**CL107**	1			
2.0 16V	05.98 - 04.00	97	1998	4	RFV (XU10J4R)	**CL115**	1			rail coil
2.0 16V	05.00 - 07.02	100	1997	4	RFN (EW10J4)	**CL112**	1	CP073	4	rail coil
2.0 Turbo C.T.	06.94 - 07.02	108	1998	4	RGX (XU10J2TE)	**CL107**	1			
Jumper Bus (230P)										
2.0	02.94 - 04.02	80	1998	4	RFW (XU10J2U)	**CL107**	1			
2.0 4x4	08.96 - 04.02	80	1998	4	RFW (XU10J2U)	**CL107**	1			
Jumper Bus (244, Z_)										
2.0	04.02 -	81	1998	4	XU10J2	**CL107**	1			
2.0 Bivalent	02.03 -	81	1998	4	XU10J2	**CL107**	1			
Jumper Flatbed (230)										
2.0	03.94 - 04.02	80	1998	4	RFW (XU10J2U)	**CL107**	1			
Jumper Van (230L)										
2.0	03.94 - 04.02	80	1998	4	RFW (XU10J2U)	**CL107**	1			
2.0 4x4	10.96 - 01.02	80	1998	4	RFW (XU10J2U)	**CL107**	1			
Jumper Van (244)										
2.0	04.02 -	81	1998	4	XU10J2	**CL107**	1			
2.0 Bivalent	02.03 -	81	1998	4	XU10J2	**CL107**	1			
Jumpy (U6U)										
1.6	10.95 -	58	1581	4	220 A2.000/1580 SPI	**CL302**	1			
2.0	04.00 - 12.06	100	1997	4	RFN (EW10J4)	**CL112**	1	CP073	4	rail coil
2.0 i 16V	03.00 -	102	1997	4		**CL112**	1	CP073	4	rail coil
Jumpy										
2.0 i	01.07 -	103	1997	4	RFH (EW10A)	**CL138**	1			rail coil
Jumpy Van (BS_, BT_, BY_, BZ_)										
1.6 i	10.95 -	58	1581	4	220 A2.000/1580 SPI	**CL302**	1			
2.0 i 16V	03.00 -	102	1997	4	RFN (EW10J4)	**CL112**	1	CP073	4	rail coil
Jumpy Van										
2.0 i	01.07 -	103	1997	4	RFH (EW10A)	**CL138**	1			rail coil
Nemo Combi										
1.4	04.09 -	54	1360	4	KFT (TU3A)/KFV (TU3A)	**CL120**	1	CP069	4	rail coil
Nemo Van (AA_)										
1.4	02.08 -	54	1360	4	KFV (TU3A)	**CL120**	1	CP069	4	rail coil
Saxo (S0, S1)										
1.0 X	05.96 - 11.98	33	954	4	CDZ (TU9M)	**CL107**	1			
1.0 X	05.98 - 06.03	37	954	4	CDZ (TU9M)	**CL107**	1			
1.1 X,SX	05.96 - 09.03	40	1124	4	HDZ (TU1M)	**CL111**	1	CP069	4	rail coil
	05.97 - 09.03	40	1124	4	HDZ (TU1M)	**CL107**	1			coil 4xPIN / year

CITROEN Saxo (S0, S1) ▶

model	year	kW	cm³	cyl	engine	coil	pcs	boot	pcs	info
CITROEN										
Saxo (S0, S1)										
1.1 X,SX	05.96 - 08.00	44	1124	4	HDZ (TU1M)	**CL107**	1			coil 4xPIN / year
	09.00 - 09.03	44	1124	4	HFX (TU1JP)	**CL111**	1	CP069	4	rail coil / year
1.4 VTS	05.96 - 01.98	55	1360	4	KFX (TU3JP)/KFW (TU3JP)	**CL107**	1			coil 4xPIN / year
	02.98 - 05.00	55	1360	4	KFX (TU3JP)/KFW (TU3JP)	**CL110**	1	CP069	4	rail coil / year
	06.00 - 06.03	55	1360	4	KFX (TU3JP)/KFW (TU3JP)	**CL111**	1	CP069	4	rail coil / year
1.6	02.96 - 06.98	66	1587	4	NFZ (TU5JP)	**CL107**	1			coil 4xPIN / year
	06.98 - 06.03	66	1587	4	NFZ (TU5JP)	**CL111**	1	CP069	4	rail coil / year
1.6	02.01 - 04.04	74	1587	4	NFT	**CL107**	1			coil 4xPIN
						CL111	1	CP069	4	rail coil
1.6	02.96 - 04.04	88	1587	4	NFX (TU5JP4)	**CL107**	1			coil 4xPIN
						CL141	1	CP073	4	rail coil
1.6 VTL,VTR	05.96 - 05.98	65	1587	4	NFZ (TU5JP)	**CL107**	1			coil 4xPIN / year
	06.98 - 06.03	65	1587	4	NFZ (TU5JP)	**CL110**	1	CP069	4	rail coil / year
1.6 VTS	09.00 - 09.03	72	1587	4	NFT	**CL107**	1			coil 4xPIN
						CL111	1	CP069	4	rail coil
1.6 VTS	06.96 - 09.03	87	1587	4	NFX (TU5JP4)	**CL107**	1			coil 4xPIN
						CL111	1	CP069	4	1st rail coil OEM No. 5970.78
						CL127	1	CP073	4	2nd rail coil OEM No. 5970.56
						CL141	1	CP073	4	3rd rail coil OEM No. 5970.81
Xantia (X1)										
1.6 i	03.93 - 01.98	65	1580	4	BFZ (XU5JP)	**CL107**	1			
1.8 i	04.97 - 01.98	66	1761	4	LFX (XU7JB)	**CL107**	1			
1.8 i	03.93 - 01.98	74	1761	4	LFZ (XU7JP)	**CL107**	1			
1.8 i 16V	06.95 - 01.98	81	1761	4	LFY (XU7JP4)	**CL107**	1			coil 4xPIN
	08.97 - 01.98	81	1761	4	LFY (XU7JP4)	**CL115**	1			rail coil / year
2.0 i	03.93 - 01.98	89	1998	4	RFX (XU10J2C)	**CL107**	1			
2.0 i 16V	06.95 - 01.98	97	1998	4	RFV (XU10J4R)	**CL107**	1			coil 4xPIN
	06.95 - 09.97	97	1998	4	RFV (XU10J4R)	**CL113**	1			1st rail coil / year
	09.97 - 01.98	97	1998	4	RFV (XU10J4R)	**CL115**	1			2nd rail coil / year
2.0 i 16V	03.93 - 01.98	112	1998	4	RFY (XU10J4/Z)	**CL105**	4			pencil
						CL107	1			coil 4xPIN
2.0 i 16V	06.94 - 01.98	110	1998	4	RFT (XU10J4/Z)	**CL105**	4			pencil
						CL107	1			coil 4xPIN
2.0 Turbo	06.95 - 01.98	108	1998	4	RGX (XU10J2TE)	**CL107**	1			
3.0 i 24V	01.97 - 01.98	140	2946	6	XFZ (ES9J4)	**CL140**	1			rail coil for 3 cylinders
Xantia (X2)										
1.8 i	01.98 - 04.03	66	1761	4	LFX (XU7JB)	**CL107**	1			
1.8 i 16V	01.98 - 04.03	81	1761	4	LFY (XU7JP4)	**CL115**	1			rail coil
2.0 i	01.98 - 04.03	89	1998	4	RFX (XU10J2C)	**CL107**	1			
2.0 i 16V	01.98 - 04.03	97	1998	4	RFV (XU10J4R)	**CL115**	1			rail coil
2.0 Turbo	01.98 - 04.03	108	1998	4	RGX (XU10J2TE)	**CL107**	1			
3.0 V6	01.98 - 04.03	140	2946	6	XFZ (ES9J4)	**CL140**	1			rail coil for 3 cylinders
Xantia Break (X1)										
1.8 i	04.97 - 01.98	66	1761	4	LFX (XU7JB)	**CL107**	1			
1.8 i	06.95 - 01.98	74	1761	4	LFZ (XU7JP)	**CL107**	1			
1.8 i 16V	06.95 - 01.98	81	1761	4	LFY (XU7JP4)	**CL107**	1			coil 4xPIN
	07.97 - 01.98	81	1761	4	LFY (XU7JP4)	**CL115**	1			rail coil / year
2.0 i	06.95 - 01.98	89	1998	4	RFX (XU10J2C)	**CL107**	1			
2.0 i 16V	06.95 - 01.98	97	1998	4	RFV (XU10J4R)	**CL107**	1			coil 4xPIN
	06.95 - 09.97	97	1998	4	RFV (XU10J4R)	**CL113**	1			1st rail coil / year
	09.97 - 01.98	97	1998	4	RFV (XU10J4R)	**CL115**	1			2nd rail coil / year
2.0 Turbo	06.95 - 01.98	108	1998	4	RGX (XU10J2TE)	**CL107**	1			
Xantia Break (X2)										
1.8 i	01.98 - 04.03	66	1761	4	LFX (XU7JB)	**CL107**	1			
1.8 i 16V	01.98 - 04.03	81	1761	4	LFY (XU7JP4)	**CL115**	1			rail coil
2.0 i	01.98 - 04.03	89	1998	4	RFX (XU10J2C)	**CL107**	1			
2.0 i 16V	01.98 - 04.03	97	1998	4	RFV (XU10J4R)	**CL115**	1			rail coil
2.0 Turbo	01.98 - 04.03	108	1998	4	RGX (XU10J2TE)	**CL107**	1			
3.0 V6	01.98 - 04.03	140	2946	6	XFZ (ES9J4)	**CL140**	1			rail coil for 3 cylinders
XM (Y3)										
2.0	05.89 - 04.94	84	1998	4		**CL129**	1			
2.0 i	05.89 - 04.94	79	1998	4	RDZ (XU10MZ)	**CL129**	1			
2.0 i	05.89 - 06.94	89	1998	4	RFZ (XU10J2)	**CL107**	1			
2.0 i Turbo	09.92 - 06.94	104	1998	4	RGY (XU10J2TE/Z)	**CL107**	1			
XM (Y4)										
2.0 i 16V	05.94 - 10.00	97	1998	4	RFV (XU10J4R)	**CL107**	1			coil 4xPIN
	07.94 - 10.00	97	1998	4	RFV (XU10J4R)	**CL113**	1			1st rail coil / year
	09.97 - 10.00	97	1998	4	RFV (XU10J4R)	**CL115**	1			2nd rail coil / year
2.0 Turbo	05.94 - 10.00	108	1998	4	RGX (XU10J2TE)	**CL107**	1			
3.0 V6	04.97 - 10.00	140	2946	6	XFZ (ES9J4)	**CL140**	1			rail coil for 3 cylinders

model	year	kW	cm³	cyl	engine	coil	pcs	boot	pcs	info
CITROEN										
XM Break (Y3)										
2.0	10.91 - 07.94	85	1998	4		**CL129**	1			
2.0 i	11.91 - 04.94	79	1998	4	RDZ (XU10MZ)/XU102C	**CL129**	1			
2.0 i	11.91 - 04.94	89	1998	4	RFZ (XU10J2)	**CL107**	1			
2.0 Turbo	09.92 - 04.94	104	1998	4	RGY (XU10J2TE/Z)	**CL107**	1			
XM Break (Y4)										
2.0 i 16V	05.94 - 10.00	97	1998	4	RFV (XU10J4R)	**CL107**	1			coil 4xPIN
	07.94 - 10.00	97	1998	4	RFV (XU10J4R)	**CL113**	1			1st rail coil / year
	09.97 - 10.00	97	1998	4	RFV (XU10J4R)	**CL115**	1			2nd rail coil / year
2.0 Turbo	05.94 - 10.00	108	1998	4	RGX /RGY	**CL107**	1			
3.0 V6	04.97 - 10.00	140	2946	6	XFZ (ES9J4)	**CL140**	1			rail coil for 3 cylinders
Xsara (N1)										
1.4 i	04.97 - 03.05	55	1360	4	KFX (TU3JP)	**CL107**	1			coil 4xPIN
						CL110	1	CP069	4	1st rail coil OEM No. 5970.72
						CL111	1	CP069	4	2nd rail coil OEM No. 5970.78
1.6 16V	09.00 - 03.05	80	1587	4	NFU (TU5JP4)	**CL104**	1	CP068	4	rail coil
1.6 i	04.97 - 09.00	65	1587	4	NFZ (TU5JP)	**CL107**	1			coil 4xPIN
						CL110	1	CP069	4	rail coil
1.8 i	04.97 - 09.00	66	1761	4	LFX (XU7JB)	**CL107**	1			
1.8 i 16V	04.97 - 09.00	81	1761	4	LFY (XU7JP4)	**CL107**	1			coil 4xPIN
						CL115	1			rail coil
1.8 i Aut.	04.97 - 09.00	74	1761	4	LFZ (XU7JP)	**CL107**	1			
2.0 16V	07.98 - 09.00	97	1998	4	RFV (XU10J4R)	**CL107**	1			coil 4xPIN
						CL115	1			rail coil
2.0 16V	09.00 - 03.05	100	1997	4	RFN (EW10J4)	**CL112**	1	CP073	4	rail coil
2.0 16V	04.97 - 09.00	120	1998	4	RFS (XU10J4RS)	**CL132**	4			pencil
Xsara Break (N2)										
1.4 i	10.97 - 08.05	55	1360	4	KFX (TU3JP)	**CL107**	1			coil 4xPIN
						CL110	1	CP069	4	1st rail coil OEM No. 5970.72
						CL111	1	CP069	4	2nd rail coil OEM No. 5970.78
1.6 16V	09.00 - 08.05	80	1587	4	NFU (TU5JP4)	**CL104**	1	CP068	4	rail coil
1.6 i	10.97 - 09.00	65	1587	4	NFZ (TU5JP)	**CL107**	1			coil 4xPIN
						CL110	1	CP069	4	rail coil
1.8 i	10.97 - 09.00	66	1761	4	LFX (XU7JB)	**CL107**	1			
1.8 i 16V	10.97 - 09.00	81	1761	4	LFY (XU7JP4)	**CL107**	1			coil 4xPIN
						CL115	1			rail coil
1.8 i Aut.	10.97 - 09.00	74	1761	4	LFZ (XU7JP)	**CL107**	1			
2.0 16V	07.98 - 09.00	97	1998	4	RFV (XU10J4R)	**CL107**	1			coil 4xPIN
						CL115	1			rail coil
2.0 16V	09.00 - 08.05	100	1997	4	RFN (EW10J4)	**CL112**	1	CP073	4	rail coil
Xsara Coupe (N0)										
1.4 i	03.98 - 03.05	55	1360	4	KFX (TU3JP)	**CL107**	1			coil 4xPIN
						CL110	1	CP069	4	1st rail coil OEM No. 5970.72
						CL111	1	CP069	4	2nd rail coil OEM No. 5970.78
1.6 16V	09.00 - 03.05	80	1587	4	NFU (TU5JP4)	**CL104**	1	CP068	4	rail coil
1.6 i	02.98 - 09.00	65	1587	4	NFZ (TU5JP)	**CL107**	1			
1.8 i	02.98 - 09.00	66	1761	4	LFX (XU7JB)	**CL107**	1			
1.8 i	02.98 - 09.00	74	1761	4	LFZ (XU7JP)	**CL107**	1			
1.8 i 16V	02.98 - 09.00	81	1761	4	LFY (XU7JP4)	**CL107**	1			coil 4xPIN
						CL115	1			rail coil
2.0 16V	09.00 - 03.05	100	1997	4	RFN (EW10J4)	**CL112**	1	CP073	4	rail coil
2.0 i 16V	02.98 - 03.05	120	1998	4	RFS (XU10J4RS)	**CL132**	4			pencil
Xsara Picasso (N68)										
1.6	12.99 -	65	1587	4	NFZ (TU5JP)	**CL107**	1			
1.6 16V	09.05 -	80	1587	4	NFU (TU5JP4)	**CL104**	1	CP068	4	rail coil
1.8 16V	02.00 -	85	1749	4	6FZ (EW7J4)	**CL112**	1	CP073	4	rail coil
2.0 16V	01.03 -	100	1997	4	RFN (EW10J4)	**CL112**	1	CP073	4	rail coil
ZX (N2)										
1.1	03.91 - 08.93	40	1124	4	H1A/H1B	**CL109**	1			
1.1	03.91 - 06.97	44	1124	4	HDZ (TU1M)	**CL109**	1			
1.4	03.91 - 06.97	55	1360	4	KDZ (TU3M/Z)	**CL109**	1			coil 1xSAE
						CL106	1			coil 4xPIN
1.4 i	03.91 - 06.97	55	1360	4	KDZ (TU3M/Z)/KFX/KDX	**CL109**	1			coil 1xSAE
						CL106	1			coil 4xPIN
1.6	07.94 - 10.97	66	1580	4		**CL107**	1			
1.6 i	03.91 - 06.97	65	1580	4	BFZ (XU5JP)/BDY (XU5M)	**CL107**	1			
1.8	07.94 - 10.97	76	1761	4	LFZ (XU7JP)	**CL107**	1			
1.8 i	07.92 - 06.97	74	1761	4	LFZ (XU7JP)	**CL107**	1			
1.8 i 16V	01.96 - 06.97	81	1761	4	LFY (XU7JP4)	**CL107**	1			
1.9	03.91 - 06.97	93	1905	4	D6E (XU9JA)	**CL107**	1			
1.9	03.91 - 09.93	96	1905	4		**CL107**	1			

CITROEN ZX (N2) ▶

model	year	kW	cm³	cyl	engine	coil	pcs	boot	pcs	info
CITROEN										
ZX (N2)										
1.9 i	03.91 - 06.97	88	1905	4	DKZ (XU9JA)	**CL109**	1			coil 1xSAE
						CL107	1			coil 4xPIN
2.0	07.94 - 10.97	90	1998	4	RFX (XU10J2C)	**CL107**	1			
2.0 i	07.92 - 06.97	89	1998	4	RFX (XU10J2C)	**CL107**	1			
2.0 i 16V	06.94 - 06.97	110	1998	4	RFT (XU10J4/Z)	**CL107**	1			coil 4xPIN
	06.94 - 06.97	110				**CL105**	4			pencil / connector with 3 pins
	07.95 - 06.97	110				**CL132**	4			pencil / connector with 2 pins
2.0 i 16V	07.92 - 10.94	112	1998	4	RFT / RFY (XU10J4/Z)	**CL105**	4			pencil
						CL107	1			coil 4xPIN
2.0 i 16V	05.96 - 06.97	120	1998	4	RFS (XU10J4RS)	**CL105**	4			pencil / connector with 3 pins
			1998	4	RFS (XU10J4RS)	**CL132**	4			pencil / connector with 2 pins
ZX Break (N2)										
1.4 i	10.93 - 10.97	55	1360	4	KFX/KDX/KDY	**CL106**	1			coil 4xPIN
						CL109	1			coil 1xSAE
1.6 i	10.93 - 10.97	65	1580	4	BFZ (XU5JP)/BDY (XU5M)	**CL107**	1			
1.8 i	10.93 - 10.97	74	1761	4	LFZ (XU7JP)	**CL107**	1			
1.8 i 16V	01.96 - 02.98	81	1761	4	LFY (XU7JP4)	**CL107**	1			
DACIA										
Dokker										
1.2 TCe	11.12 -	85	1197	4	H5F 402	**CL155**	4			pencil
1.6	11.12 -	61	1598	4	K7M 812/K7M 828	**CL116**	1			
1.6 LPG	11.13 -	61	1598	4	K7M 812/K7M 828	**CL116**	1			
Dokker Express										
1.2 TCe 115	12.12 -	84	1198	4	H5F 402	**CL155**	4			pencil
1.6 16V	12.12 -	61	1598	4	K7M 812/K7M 828	**CL116**	1			
1.6 LPG	11.13 -	61	1598	4	K7M 812/K7M 828	**CL116**	1			
Duster										
1.2 TCe 125	10.13 -	92	1197	4	H5F 404	**CL155**	4			pencil
1.6 16V	04.10 -	77	1598	4	K4M 696/K4M 690	**CL100**	4			pencil
1.6 16V 4x4	06.10 -	77	1598	4	K4M 606	**CL100**	4			pencil
1.6 16V LPG	04.11 -	77	1598	4	K4M 696	**CL100**	4			pencil
Lodgy										
1.6	03.12 -	61	1598	4	K7M 812/K7M 828	**CL116**	1			
1.2 TCe	03.12 -	85	1197	4	H5F 402	**CL155**	4			pencil
1.6 LPG	11.13 -	61	1598	4	K7M 812/K7M 828	**CL116**	1			
Logan (LS_)										
1.2 16V	02.06 -	55	1149	4	D4F 732	**CL150**	1			
1.4	09.04 -	55	1390	4	K7J 710	**CL116**	1			coil 4xPIN
						CL117	1			coil with ignition cables
1.4 MPI LPG	02.06 -	55	1390	4	K7J 714/K7J 710	**CL116**	1			
1.6	09.04 -	64	1598	4	K7M 710	**CL116**	1			
1.6 16V (LS0M)	02.06 -	77	1598	4	K4M 696/K4M 690	**CL100**	4			pencil
1.6 BiFuel	05.10 -	62	1598	4	K7M 718	**CL116**	1			
1.6 MPI 85	05.10 -	62	1598	4	K7M 800	**CL116**	1			
Logan Express (FS_)										
1.4	03.09 -	55	1390	4	K7J 710	**CL116**	1			
1.6	03.09 -	64	1598	4	K7M 710	**CL116**	1			
1.6 MPI 85	05.10 -	62	1598	4	K7M 800	**CL116**	1			
Logan II										
0.9 TCe 90	10.12 -	66	898	3	H4B 400	**CL155**	3			pencil
1.2	05.15 -	54	1149	4		**CL150**	1			
1.2	10.12 -	55	1149	4	D4F 732	**CL150**	1			
1.2 LPG	10.12 -	55	1149	4	D4F 734	**CL150**	1			
Logan MCV (KS_)										
1.4	02.07 -	55	1390	4	K7J 710	**CL116**	1			
1.6	02.07 -	64	1598	4	K7M 710	**CL116**	1			
1.6 16V	02.07 -	77	1598	4	K4M 696/K4M 690	**CL100**	4			pencil
1.6 16V Hi-Flex	11.09 -	77	1598	4	K4M 694/K4M 690	**CL100**	4			pencil
1.6 BiFuel	11.08 -	64	1598	4	K7M 710	**CL116**	1			
1.6 MPI 85	05.10 -	62	1598	4	K7M 800	**CL116**	1			
Logan MCV II										
0.9 TCe 90	02.13 -	66	898	3	H4B 400	**CL155**	3			pencil
1.2	05.15 -	54	1149	4		**CL150**	1			
1.2	02.13 -	55	1149	4	D4F 732	**CL150**	1			
1.2 LPG	02.13 -	55	1149	4	D4F 734	**CL150**	1			
Logan Pick-up (US_)										
1.4	01.09 -	55	1390	4	K7J 710	**CL116**	1			
1.6	03.08 -	64	1598	4	K7M 710	**CL116**	1			
1.6 BiFuel	05.10 -	62	1598	4	K7M 800	**CL116**	1			
1.6 MPI 85	05.10 -	62	1598	4	K7M 800	**CL116**	1			

DACIA / DAEWOO ▶

model	year	kW	cm³	cyl	engine	coil	pcs	boot	pcs	info
DACIA										
Sandero										
1.2 16V	11.08 -	55	1149	4	D4F 732	**CL150**	1			
1.2 16V LPG	11.08 -	55	1149	4	D4F 732	**CL150**	1			
1.4	06.08 -	55	1390	4	K7J 710	**CL116**	1			
1.4 MPI LPG	01.09 -	53	1390	4	K7J 714	**CL116**	1			
1.6	06.08 -	64	1598	4	K7M 710	**CL116**	1			
1.6 MPI 85	05.10 -	62	1598	4	K7M 800	**CL116**	1			
Sandero II										
0.9 TCe 90	10.12 -	66	898	3	H4B 400	**CL155**	3			pencil
1.2	05.15 -	54	1149	4		**CL150**	1			
1.2	10.12 -	55	1149	4	D4F 732	**CL150**	1			
1.2 LPG	10.12 -	55	1149	4		**CL150**	1			
1.6	11.12 -	61	1598	4	K7M 812	**CL116**	1			
1.6 16V	01.13 -	77	1598	4	K4M 694/K4M 845/K4M 842	**CL100**	4			pencil
Solenza										
1.4	02.03 -	55	1390	4	K7J 710	**CL116**	1			
DAEWOO										
Aranos										
1.5	01.95 - 11.97	66	1498	4	V15L	**CL211**	1			
1.8	01.95 - 11.97	70	1796	4	Y18L	**CL211**	1			
2.0	01.95 - 11.97	77	1998	4	C20LE	**CL211**	1			
Cielo										
1.5	04.95 - 07.97	55	1498	4	Y15L	**CL211**	1			
Cielo (KLETN)										
1.5	08.96 - 08.97	44	1498	4	G15MF	**CL211**	1			
1.5	02.95 - 08.97	52	1498	4	G15MF	**CL211**	1			
1.5	02.95 - 08.97	55	1498	4	G15MF	**CL211**	1			
1.5 16V	02.95 - 08.97	66	1498	4	A15MF	**CL211**	1			
Cielo Sedan (KLETN)										
1.5	08.96 - 08.97	44	1498	4	G15MF	**CL211**	1			
1.5	02.95 - 08.97	52	1498	4	G15MF	**CL211**	1			
1.5	02.95 - 08.97	55	1498	4	G15MF	**CL211**	1			
1.5 16V	02.95 - 08.97	66	1498	4	A15MF	**CL211**	1			
Espero (KLEJ)										
1.5 16V	02.95 - 06.99	66	1498	4	A15MF	**CL211**	1			
1.5 16V	10.93 - 09.94	65	1498	4	A15MF	**CL211**	1			
1.8	02.95 - 09.99	66	1796	4	C18LE	**CL211**	1			
1.8	02.95 - 06.99	70	1796	4	C18LE	**CL211**	1			
2.0	02.95 - 06.99	77	1998	4	C20LE	**CL211**	1			
2.0	10.91 - 09.93	74	1998	4	C20LZ	**CL211**	1			
2.0	10.93 - 09.94	81	1998	4	C20LE	**CL211**	1			
Evanda (KLAL)										
2.0	08.02 -	96	1998	4	L88/X 20 SED	**CL220**	1			
Kalos (KLAS)										
1.2	04.03 -	53	1150	4	B12S1	**CL220**	1			
1.4	09.02 -	61	1399	4	F14S3	**CL220**	1			
1.4 16V	04.03 -	69	1399	4	F14D3	**CL220**	1			
Kalos Sedan (KLAS)										
1.4	11.02 - 12.04	61	1399	4	F14S3	**CL220**	1			
1.4	05.03 - 12.04	69	1399	4	F14D3	**CL220**	1			
Korando (KJ)										
2.3	01.99 -	105	2295	4	M 161.970	**CL606**	2	CP004	2	semidirect / pencil
3.2 4x4	01.99 -	156	3199	6	M 104.995	**CL606**	3	CP004	3	semidirect / pencil
Korando Cabrio (KJ)										
2.0 16V	02.99 -	94	1998	4	M 161.950	**CL606**	2	CP004	2	semidirect / pencil
2.3	02.99 -	105	2295	4	M 161.970	**CL606**	2	CP004	2	semidirect / pencil
Lacetti CC (KLAN)										
1.4	02.04 -	70	1399	4	F14D3	**CL220**	1			
1.6	02.04 -	80	1598	4	F16D3	**CL225**	1			
1.8	02.04 -	90	1799	4	T18SED	**CL220**	1			
Lacetti Sedan (J200)										
1.8 CDX	08.03 - 12.04	90	1799	4	T18SED	**CL220**	1			
Lanos (KLAT)										
1.4	05.97 -	55	1349	4	A14SMS	**CL201**	1			
1.5	05.97 -	63	1498	4	A15SMS	**CL201**	1			connector with 4 pins
						CL220	1			connector with 3 pins
1.6 16V	05.97 -	78	1598	4	A16DMS	**CL201**	1			
Lanos Sedan (KLAT)										
1.4	05.97 -	55	1349	4	A14SMS	**CL201**	1			
1.5	05.97 -	63	1498	4	A15SMS	**CL201**	1			
1.6 16V	05.97 -	78	1598	4	A16DMS	**CL201**	1			

model	year	kW	cm³	cyl	engine	coil	pcs	boot	pcs	info
DAEWOO										
Leganza (KLAV)										
2.0 16V	06.97 - 12.02	98	1998	4	X 20 SED	**CL201**	1			
2.0 16V	07.00 - 04.04	93	1998	4	T20SED	**CL201**	1			
2.2 16V	04.99 - 12.02	100	2198	4	T22SED	**CL201**	1			
Matiz (KLYA)										
0.8	09.98 - 12.01	38	796	3	F8CV	**CL204**	1			coil 1xDIN / year
	01.02 -	38	796	3	F8CV	**CL216**	1			coil 3xSAE / year
1.0	01.03 -	47	995	4	B10S	**CL220**	1			
Musso (FJ)										
2.3	01.99 -	103	2295	4	M 111.970	**CL606**	2	CP004	2	semidirect / pencil
3.2 4x4	01.99 -	162	3199	6	M 104.992	**CL606**	3	CP004	3	semidirect / pencil
Nexia Sedan										
1.5	07.08 -	59	1498	4	Y15L	**CL201**	1			
1.6	07.08 -	80	1598	4	F16D3	**CL211**	1			
						CL225	1			UZ Daewoo Nexia New
Nubira (KLAJ)										
1.6 16V	05.97 -	78	1598	4	A16DMS	**CL201**	1			
2.0 16V	05.97 -	98	1998	4	X 20 SED/Z20L	**CL201**	1			
Nubira Sedan (KLAJ)										
1.6 16V	05.97 -	78	1598	4	A16DMS	**CL201**	1			
1.6 16V	07.00 -	76	1598	4	A16DMS	**CL201**	1			
2.0	06.99 - 07.03	81	1998	4	C20SED	**CL220**	1			
2.0 16V	12.00 -	93	1998	4	T20SED	**CL201**	1			
2.0 16V	05.97 -	98	1998	4	X 20 SED	**CL201**	1			
Nubira Sedan (KLAN)										
1.6	07.03 -	80	1598	4	F16D3	**CL225**	1			
1.8	07.03 -	90	1799	4	T18SED	**CL220**	1			
Nubira Wagon (KLAJ)										
1.6 16V	06.97 -	66	1598	4	A16SMS	**CL201**	1			
1.6 16V	12.00 -	76	1598	4	A16DMS	**CL201**	1			
1.6 16V	05.97 -	78	1598	4	A16DMS	**CL201**	1			
2.0 16V	12.00 -	93	1998	4	T20SED	**CL201**	1			
2.0 16V	05.97 -	98	1998	4	X 20 SED	**CL201**	1			
Nubira Wagon (KLAN)										
1.6	07.03 -	80	1598	4	F16D3	**CL225**	1			
1.8	07.03 -	90	1799	4	T18SED	**CL220**	1			
Rexton (GAB_)										
3.2 V6	04.02 -	162	3199	6	M 162.992	**CL606**	3	CP004	3	semidirect / pencil
Tacuma / Rezzo (KLAU)										
1.6	09.00 -	77	1598	4	A16DMS	**CL220**	1			
1.8	09.00 -	67	1761	4	F18D2	**CL220**	1			
1.8	09.00 -	72	1761	4	A18DMS	**CL220**	1			
1.8	09.00 -	74	1761	4	F18S2	**CL220**	1			
2.0	09.01 -	89	1998	4	X 20 SED	**CL220**	1			
2.0	09.00 -	94	1998	4	T20SED	**CL220**	1			
Tico (KLY3)										
0.8	02.95 - 12.00	35	796	3	F8C	**CL231**	1			
0.8	01.96 - 12.00	38	796	3	F8CV	**CL231**	1			
DAIHATSU										
Applause I (A101, A111)										
1.6 16V	06.89 - 07.97	66	1590	4	HD	**CL563**	1			
1.6 16V	06.89 - 07.97	77	1590	4	HD-E	**CL907**	1			
1.6 16V 4WD	06.89 - 07.97	77	1590	4	HD-E	**CL907**	1			
Copen										
1.3	03.06 -	64	1298	4	K3-VE	**CL587**	4			pencil
Cuore II (L80, L81)										
0.8	11.89 - 12.90	29	847	3	ED 10	**CL563**	1			
0.8	09.85 - 06.90	32	847	3	ED 10	**CL563**	1			
0.8 4WD	09.86 - 10.88	32	847	3	ED 10	**CL563**	1			
Cuore VI (L7_)										
1.0 i	10.98 - 05.03	41	989	3	EJ-DE/EJ-VE	**CL922**	3			pencil
Cuore VIII										
1.0	04.07 -	51	998	3	1KR-FE	**CL555**	3	CP042	3	pencil
Extol Bus (S22_, S23_)										
1.3	07.00 -	63	1298	4	K3-VE	**CL587**	4			pencil
Feroza Hard Top (F300)										
1.6 16V	10.88 - 12.99	63	1590	4	HDC	**CL563**	1			year
	06.92 - 12.99	63	1590	4	HDC	**CL907**	1			year
1.6 i 16V 4x4	10.88 - 12.99	70	1590	4	HD-E	**CL563**	1			year
	01.90 - 12.99	70	1590	4	HD-E	**CL907**	1			year

DAIHATSU / FIAT ▶

model	year	kW	cm³	cyl	engine	coil	pcs	boot	pcs	info
DAIHATSU										
Feroza Soft Top (F300)										
1.6 16V	10.88 - 06.92	63	1590	4	HDC	**CL563**	1			year
	06.92 - 12.99	63	1590	4	HDC	**CL907**	1			year
1.6 i 16V	10.88 - 06.90	70	1590	4	HD-E	**CL563**	1			year
	06.90 - 12.99	70	1590	4	HD-E	**CL907**	1			year
Charade III (G100, G101, G102)										
1.0	03.87 - 12.92	38	993	3	CB 23	**CL563**	1			
1.0	11.90 - 12.92	40	993	3	CB 90	**CL563**	1			
1.0	04.89 - 12.92	41	993	3	CB 90	**CL563**	1			
1.0 GTi	03.87 - 12.92	74	993	3	CB 80 T	**CL563**	1			
1.0 Turbo	03.87 - 10.90	50	993	3	CB 61	**CL563**	1			
1.3 i	06.88 - 12.92	66	1296	4	HCE	**CL563**	1			
1.3 i 4WD	06.88 - 01.93	66	1296	4	HCE	**CL563**	1			
Charade III Sedan (G102)										
1.3	11.90 - 02.93	66	1296	4	HCE	**CL563**	1			
Charade IV (G200, G202)										
1.3	09.96 - 11.99	44	1296	4	HC	**CL563**	1			
1.3 16V	05.96 - 11.99	55	1296	4	HCE	**CL563**	1			
1.3 i 16V	01.93 - 09.00	62	1296	4	HCE/HC	**CL563**	1			
Materia (M4_)										
1.3	10.06 -	67	1298	4	K3-VE	**CL587**	4			pencil
1.5	10.06 -	76	1495	4	3SZ-VE	**CL587**	4			pencil
1.5 Eco 4WD	10.06 -	76	1495	4	3SZ-VE	**CL587**	4			pencil
Sirion (M1)										
1.0 i	04.98 - 09.00	41	989	3	EJ-DE	**CL922**	3			pencil
1.0 i 4WD	04.99 - 09.00	41	989	3	EJ-DE	**CL922**	3			pencil
1.3 Sport	08.00 - 01.05	75	1298	4	K3-VE2	**CL587**	4			pencil
1.3 Sport 4WD	08.00 - 03.05	75	1298	4	K3-VE2	**CL587**	4			pencil
Sirion (M3_)										
1.3	01.05 -	64	1298	4	K3-VE	**CL587**	4			pencil
1.3	03.08 -	67	1298	4	K3-VE	**CL587**	4			pencil
1.3 4WD	04.05 -	64	1298	4	K3-VE	**CL587**	4			pencil
1.3 4WD	03.08 -	67	1298	4	K3-VE	**CL587**	4			pencil
1.5	03.08 -	76	1495	4	3SZ-VE	**CL587**	4			pencil
Terios (J1)										
1.3	09.01 - 10.05	63	1298	4	K3-VE	**CL587**	4			pencil
1.3 4WD	10.00 - 10.05	63	1298	4	K3-VE	**CL587**	4			pencil
Terios (J2_)										
1.5 4x4	05.06 -	77	1495	4	3SZ-VE	**CL587**	4			pencil
1.5 VVT-i	11.05 -	77	1495	4	3SZ-VE	**CL587**	4			pencil
YRV (M2)										
1.3	02.01 -	64	1298	4	K3-VE	**CL587**	4			pencil
1.3 4WD	02.01 -	64	1298	4	K3-VE	**CL587**	4			pencil
1.3 GTi	07.02 -	95	1298	4	K3-VET	**CL587**	4			pencil
FIAT										
126										
650	07.77 - 09.87	17	652	2	126 A1.000/126 A1.048	**CL316**	1			twin coil
700	09.87 - 06.96	19	704	2	126 A2.000/126 A2.048	**CL316**	1			twin coil
500 (312)										
0.9	12.13 -	44	964	2	312 A4.000/312 A6.000	**CL310**	2	CP072	2	pencil
0.9	09.12 -	48	964	2	312 A4.000	**CL310**	2	CP072	2	pencil
0.9	07.10 -	63	875	2	312 A2.000	**CL325**	2			pencil
1.2	10.07 -	51	1242	4	169 A4.000	**CL309**	1			
1.2 LPG	12.10 -	51	1242	4	169 A4.000	**CL309**	1			
1.4	10.07 -	74	1368	4	169 A3.000	**CL310**	4	CP072	4	pencil
1.4 Abarth	08.08 -	132	1368	4	312 A3.000	**CL324**	4			pencil
1.4 Abarth	08.08 -	139	1368	4	312 A1.000	**CL324**	4			pencil
1.4 Abarth	08.08 -	99	1368	4	312 A1.000	**CL323**	4			pencil
1.4 Abarth	08.08 -	118	1368	4	312 A1.000	**CL324**	4			pencil
500 C (312)										
0.9	09.12 -	48	964	2	312 A4.000	**CL310**	2	CP072	2	pencil
0.9	09.09 -	63	875	2	312 A2.000	**CL325**	2			pencil
1.2	09.09 -	51	1242	4	169 A4.000	**CL309**	1			
1.4	09.09 -	74	1368	4	169 A3.000	**CL310**	4	CP072	4	pencil
1.4	09.11 -	75	1368	4	169 A3.000	**CL310**	4	CP072	4	pencil
500L										
0.9 Natural Power	03.13 -	63	875	2	312 A2.000	**CL325**	2			pencil
1.4	09.12 -	70	1368	4	843 A1.000	**CL310**	4	CP072	4	pencil
500X										
1.4	09.14 -	103	1368	4	55263624	**CL326**	4			pencil
1.4	09.14 -	100	1368	4	55263624	**CL326**	4			pencil
1.4 4x4	02.15 -	120	1368	4	55263623	**CL326**	4			pencil

FIAT 500X ▶

model	year	kW	cm³	cyl	engine	coil	pcs	boot	pcs	info
FIAT										
500X										
1.4 4x4	02.15 -	125	1368	4	55263623	**CL326**	4			pencil
Barchetta (183)										
1.8 16V	04.95 - 07.99	96	1747	4	183 A1.000/188 A6.000	**CL314**	4			year / pencil
	07.99 - 05.05	96	1747	4	183 A1.000/188 A6.000	**CL315**	4			year / pencil
Brava (182)										
1.2 16V 80	10.00 - 10.01	59	1242	4	188 A5.000	**CL302**	1			
1.2 16V 80	12.98 - 12.02	60	1242	4	182 B2.000	**CL302**	1			
1.4	10.95 - 10.01	55	1370	4	182 A5.000	**CL302**	1			
1.4 12 V	10.95 - 08.98	59	1370	4	182 A3.000	**CL302**	1			
1.6 16V	10.95 - 10.01	66	1581	4	182 A6.000	**CL312**	1			
1.6 16V	02.96 - 10.01	76	1581	4	182 A4.000	**CL312**	1			
1.8 GT 16V	10.95 - 06.98	83	1747	4	182 A2.000	**CL314**	4			year / pencil
	06.98 - 10.01	83	1747	4	182 A2.000	**CL315**	4			year / pencil
Bravo I (182)										
1.2 16V 80	10.00 - 10.01	59	1242	4	188 A5.000	**CL302**	1			
1.2 16V 80	12.98 - 10.00	60	1242	4	182 B2.000	**CL302**	1			
1.4	10.95 - 10.01	55	1370	4	182 A5.000	**CL302**	1			
1.4	10.95 - 10.01	59	1370	4	182 A3.000	**CL302**	1			
1.6 16V	10.95 - 10.01	66	1581	4	182 A6.000	**CL312**	1			
1.6 16V	03.96 - 10.01	76	1581	4	182 A4.000	**CL312**	1			
1.8 GT	10.95 - 06.98	83	1747	4	182 A2.000	**CL314**	4			year / pencil
	06.98 - 10.01	83	1747	4	182 A2.000	**CL315**	4			year / pencil
2.0 HGT 20V	10.95 - 07.98	108	1998	5	182 A1.000	**CL317**	5			pencil
2.0 HGT 20V	07.98 - 10.01	113	1998	5	182 B7.000	**CL318**	5			pencil
Bravo II (198)										
1.4	04.07 -	66	1368	4	192 B2.000	**CL310**	4	CP072	4	pencil
1.4 16V	03.08 -	103	1368	4	198 A7.000	**CL323**	4			pencil
1.4 LPG	11.09 -	66	1368	4	192 B2.000	**CL310**	4	CP072	4	pencil
1.4 T-Jet	09.07 -	88	1368	4	198 A4.000	**CL323**	4			pencil
1.4 T-Jet	09.07 -	110	1368	4	198 A1.000	**CL323**	4			pencil
Cinquecento (170)										
0.7	12.91 - 01.96	23	704	2	170 A.000	**CL300**	1			twin coil
0.7 i	07.94 - 01.98	22	704	2	170 A.046	**CL300**	1			twin coil
0.9	07.91 - 12.93	30	903	4	170 A1.000	**CL300**	2			twin coil
0.9 i.e.	07.91 - 12.93	30	903	4	170 A1.046	**CL300**	2			twin coil
0.9 i.e. S	07.91 - 07.99	29	899	4	1170 A1.000/1170 A1.046	**CL300**	2			twin coil
1.1 Sporting	10.94 - 01.98	40	1108	4	176 B2.000	**CL300**	2			twin coil
Coupe (FA/175)										
1.8 16V	03.96 - 05.98	96	1747	4	183 A1.000	**CL314**	4			year / pencil
	06.98 - 08.00	96	1747	4	183 A1.000	**CL315**	4			year / pencil
2.0 16V Turbo	11.93 - 08.96	140	1995	4	175 A1.000	**CL300**	2			twin coil
2.0 20V	08.96 - 04.98	108	1998	5	182 A1.000	**CL317**	5			pencil
2.0 20V	04.98 - 08.00	113	1998	5	182 B3.000	**CL318**	5			pencil
2.0 20V Turbo	08.96 - 08.00	162	1998	5	175 A3.000	**CL317**	5			pencil
Croma (154)										
2000 16V	08.92 - 08.96	101	1995	4	154 E1.000	**CL302**	1			
2000 CHT	12.85 - 02.89	66	1995	4	154 A1.000	**CL303**	1			coil socket: 4x flat contact
						CL313	1			coil socket with 4 pins
2000 i.e.	03.86 - 09.90	83	1995	4	834 B.048	**CL303**	1			
2000 i.e.	10.87 - 08.96	85	1995	4	154 C3.046/834 B.146	**CL313**	1			
2000 i.e.	03.87 - 09.92	88	1995	4	834 B.000/154 C3.000	**CL313**	1			
2000 i.e. Turbo	06.87 - 08.96	110	1995	4	154 C4.046/834 C.146	**CL313**	1			
Croma (194)										
1.8 16V	12.05 -	103	1796	4	939 A4.000	**CL221**	1	CP062	4	rail coil
2.2 16V	06.05 -	108	2198	4	194 A1.000	**CL224**	1	CP058	4	rail coil
Doblo (119)										
1.2	03.01 -	48	1242	4	223 A5.000	**CL300**	2			twin coil
1.4	10.05 -	57	1368	4	350 A1.000	**CL309**	1			
1.6 16V	10.01 -	76	1596	4	182 B6.000	**CL301**	4			pencil
						CL312	1			coil 4xPIN
1.6 Natural Power	09.02 -	76	1596	4	182 B6.000	**CL312**	1			
Doblo Cargo (223)										
1.2	03.01 -	48	1242	4	223 A5.000	**CL300**	2			twin coil
1.4	10.05 -	57	1368	4	350 A1.000	**CL309**	1			
1.6 16V	10.01 -	76	1596	4	182 B6.000	**CL301**	4			pencil
						CL312	1			coil 4xPIN
1.6 Natural Power	09.02 -	76	1596	4	182 B6.000	**CL312**	1			
Doblo Flatbed (263)										
1.4	04.10 -	70	1368	4	843 A1.000	**CL310**	4	CP072	4	pencil
Doblo MPV (152, 263)										
1.4	02.10 -	70	1368	4	843 A1.000	**CL310**	4	CP072	4	pencil

model	year	kW	cm³	cyl	engine	coil	pcs	boot	pcs	info
FIAT										
Doblo Van/Combi (263)										
1.4	02.10 -	70	1368	4	843 A1.000	**CL310**	4	CP072	4	pencil
Ducato Bus (230)										
2.0 4x4	11.94 - 11.01	80	1998	4	RFW	**CL107**	1			
2.0 Panorama	03.94 - 04.02	80	1998	4	RFW	**CL107**	1			
Ducato Bus (244, Z_)										
2.0	04.02 -	81	1998	4	RFL	**CL107**	1			
2.0 Bipower	11.02 -	81	1998	4	RFL	**CL107**	1			
Ducato Flatbed (230)										
2.0	06.98 - 04.02	80	1998	4	RFW	**CL107**	1			
Ducato Van (230L)										
2.0	03.94 - 04.02	80	1998	4	RFW	**CL107**	1			
Ducato Van (244)										
2.0	04.02 -	81	1998	4	RFL	**CL107**	1			
2.0 Bipower	11.02 -	81	1998	4	RFL	**CL107**	1			
Ducato Van (250)										
3.0 Natural Power 140	04.09 -	100	2999	4	F1CFA401A/F1CE0441A	**CL310**	4	CP072	4	pencil
Duna (146 B)										
60 1.1	01.87 - 12.91	43	1116	4	146 A6.000	**CL308**	1			
70 1.3	01.87 - 12.91	49	1301	4	146 A5.000	**CL308**	1			
Duna Weekend (146 B)										
60 1.1	01.87 - 12.91	43	1116	4	146 A6.000	**CL308**	1			
70 1.3	01.87 - 12.91	49	1301	4	146 A5.000	**CL308**	1			
Elba (146_)										
1.5	01.92 - 12.96	55	1499	4	149 C1.000	**CL308**	1			
Fiorino (127)										
1050	01.80 - 12.87	37	1049	4	127 A.000	**CL308**	1			
Fiorino (147)										
1.0	01.80 - 12.87	37	1049	4	127 A.000	**CL308**	1			
1.3	12.87 - 08.93	49	1301	4	146 A5.000	**CL308**	1			
1.5	01.88 - 08.93	55	1499	4	149 C1.000	**CL308**	1			
Fiorino Pick-up (146)										
1.3	01.88 - 12.94	49	1301	4	146 A5.000	**CL308**	1			
1.4	05.94 - 05.01	49	1372	4	146 D5.000	**CL302**	1			
1.6	01.94 - 05.01	55	1581	4	146 D6.000/146 C6.000	**CL313**	1			
Fiorino Van (146)										
60 1.1	05.88 - 12.93	40	1116	4	146 A9.000	**CL308**	1			
70 1.3	01.88 - 12.94	49	1301	4	146 A5.000	**CL308**	1			
70 1.4 i.e.	05.94 - 10.96	49	1372	4	146 C5.000/146 D5.000	**CL313**	1			with distributor / year
	11.96 - 05.01	49	1372	4	146 C5.000/146 D5.000	**CL302**	1			without distributor / year
75 1.5 i.e.	05.88 - 12.93	55	1499	4	149 C1.000	**CL313**	1			
75 1.6 i.e.	10.93 - 05.01	55	1581	4	146 D6.000/146 C6.000	**CL302**	1			without distributor
						CL313	1			with distributor
Fiorino Van/Combi (225)										
1.4 Natural Power	10.09 -	57	1368	4	350 A1.000	**CL309**	1			
Freemont (JF_)										
3.6	08.11 -	206	3604	6	ERB	**CL721**	6	CP065	6	pencil
3.6 4x4	08.11 -	206	3604	6	ERB	**CL721**	6	CP065	6	pencil
Grande Punto (199)										
1.2	10.05 -	48	1242	4	199 A4.000	**CL309**	1			
1.2	09.10 -	51	1242	4	169 A4.000	**CL309**	1			
1.4	06.06 -	55	1368	4	199 A7.000	**CL309**	1			
1.4	10.05 -	57	1368	4	350 A1.000	**CL309**	1			
1.4 16V	10.05 -	70	1368	4	199 A6.000	**CL310**	4	CP072	4	pencil
1.4 Abarth	12.07 -	114	1368	4	199 A8.000	**CL323**	4			pencil
1.4 Abarth	12.07 -	132	1368	4	199 A8.000/955 A8.000	**CL323**	4			pencil
1.4 T-Jet	09.07 -	88	1368	4	198 A4.000	**CL323**	4			pencil
Idea										
1.2 16V	01.04 -	59	1242	4	188 A5.000	**CL310**	4	CP072	4	pencil
1.4	10.05 -	57	1368	4	350 A1.000	**CL309**	1			
1.4	12.03 -	66	1368	4	192 B2.000	**CL310**	4	CP072	4	pencil
1.4 16V	01.04 -	70	1368	4	843 A1.000	**CL310**	4	CP072	4	pencil
1.4 LPG	03.09 -	57	1368	4	350 A1.000	**CL309**	1			
Linea (323)										
1.4	06.07 -	57	1368	4	350 A1.000	**CL309**	1			
1.4 T-Jet	09.07 -	88	1368	4	198 A4.000	**CL323**	4			pencil
Marea (185)										
1.2 16V	10.98 - 05.02	60	1242	4	182 B2.000	**CL302**	1			
1.4 80 12V	09.96 - 05.02	59	1370	4	182 A3.000	**CL302**	1			
1.6 16V	04.97 - 02.99	75	1581	4	185 A3.000	**CL312**	1			
1.6 100 16V	09.96 - 05.02	76	1581	4	182 A4.000	**CL312**	1			
1.6 100 16V Bipower	04.99 - 05.02	76	1581	4	186 A4.000/185 A3.000	**CL312**	1			

FIAT Marea (185) ▶

model	year	kW	cm³	cyl	engine	coil	pcs	boot	pcs	info
FIAT										
Marea (185)										
1.8 115 16V	09.96 - 06.99	83	1747	4	182 A2.000	**CL314**	4			year / pencil
	06.99 - 05.02	83	1747	4	182 A2.000	**CL315**	4			year / pencil
2.0 150 20V	09.96 - 04.99	108	1998	5	182 A1.000	**CL317**	5			pencil
2.0 150 20V	01.01 - 05.02	110	1998	5	185 A8.000	**CL318**	5			pencil
2.0 155 20V	04.99 - 01.01	113	1998	5	182 B7.000	**CL318**	5			pencil
Marea Weekend (185)										
1.2 16V	10.98 - 05.02	60	1242	4	182 B2.000	**CL302**	1			
1.4 80 12V	09.96 - 05.02	59	1370	4	182 A3.000	**CL302**	1			
1.6 100 16V	09.96 - 05.02	76	1581	4	182 A4.000	**CL312**	1			
1.8 115 16V	09.96 - 06.99	83	1747	4	182 A2.000	**CL314**	4			year / pencil
	06.99 - 05.02	83	1747	4	182 A2.000	**CL315**	4			year / pencil
2.0 150 20V	09.96 - 04.99	108	1998	5	182 A1.000	**CL317**	5			pencil
2.0 150 20V	01.01 - 05.02	110	1998	5	185 A8.000	**CL318**	5			pencil
2.0 155 20V	04.99 - 02.03	113	1998	5	182 B7.000	**CL318**	5			pencil
Multipla (186)										
1.6	09.00 - 06.10	76	1596	4	182 B6.000	**CL312**	1			
1.6 16V	04.02 - 06.10	70	1596	4	182 B6.000	**CL312**	1			
1.6 100 16V	04.99 - 06.10	76	1581	4	182 A4.000	**CL312**	1			
1.6 16V Bipower	04.99 - 06.10	76	1581	4	186 A4.000	**CL312**	1			
1.6 16V Bipower	10.01 - 06.10	76	1596	4	182 B6.000	**CL312**	1			
1.6 16V Blupower	04.99 - 06.10	70	1581	4	186 A3.000	**CL312**	1			
1.6 16V GPL	10.01 - 06.10	76	1596	4	182 B6.000	**CL312**	1			
Palio (178BX)										
1.0	04.96 -	45	994	4		**CL300**	2			twin coil
1.0	04.96 -	56	994	4		**CL300**	2			twin coil
1.2	06.98 -	54	1242	4	178 B5._/178 E2._/176 A8.000	**CL300**	2			twin coil
1.2	07.97 - 08.02	44	1242	4	188 A4.000	**CL300**	2			twin coil
1.4	04.96 -	51	1372	4	178 B2.000	**CL300**	2			twin coil
1.4 cat	04.96 -	51	1372	4	178 B2.016	**CL300**	2			twin coil
1.5	04.96 -	57	1497	4		**CL300**	2			twin coil
1.5	06.04 -	62	1461	4	178 E5.022	**CL300**	2			twin coil
1.6 16V	04.96 -	74	1581	4	178 B3.000	**CL312**	1			
Palio Weekend (178DX)										
1.2	02.01 -	44	1242	4	178 C4.066/188 A4.000	**CL300**	2			twin coil
1.2	04.96 - 02.01	54	1242	4	178 B5.000	**CL300**	2			twin coil
1.4	07.97 - 08.01	51	1372	4	178 B2.000	**CL300**	2			twin coil
1.5	02.02 -	62	1461	4	178 E5.022	**CL300**	2			twin coil
1.6 16V	04.96 - 02.01	74	1581	4	178 B3.000	**CL312**	1			
1.6 16V	02.01 -	76	1596	4	182 B6.000	**CL301**	4			pencil
						CL312	1			coil 4xPIN
Panda (141A_)										
650	01.82 - 07.04	22	652	2	141 A.000	**CL316**	1			twin coil
750	01.86 - 01.95	25	770	4	156 A4.000	**CL308**	1			
750	01.86 - 01.95	25	770	4	141 B.000	**CL308**	1			
750 cat	01.95 - 10.03	25	770	4	156 A4.048	**CL308**	1			
900	04.92 - 12.96	29	899	4	1170 A1.046	**CL300**	2			twin coil
1000	01.85 - 12.92	37	999	4	156 A3.000	**CL304**	1			
1000 4x4	05.86 - 12.94	33	999	4	141 C2.000/156 A2.246	**CL300**	2			twin coil
1000 4x4	01.86 - 12.92	37	999	4	156 A3.000	**CL304**	1			
1000 i.e. cat	10.87 - 08.98	33	999	4	141 C2.000/156 A2.246	**CL300**	2			twin coil
1100	05.91 - 12.99	37	1108	4	156 C.046	**CL300**	2			without distributor
						CL304	1			with distributor
1100	02.95 - 09.03	40	1108	4	187 A1.000/176 B2.000	**CL300**	2			twin coil
1100 4x4	02.95 - 07.04	40	1108	4	176 B2.000	**CL300**	2			twin coil
1100 Trekking 4x4	10.91 - 07.04	37	1108	4	156 C.046	**CL300**	2			without distributor
						CL304	1			with distributor
Panda (169)										
1.1	09.03 -	40	1108	4	187 A1.000	**CL300**	2			twin coil
1.2	09.03 -	44	1242	4	188 A4.000	**CL300**	2			twin coil
1.2	03.10 -	51	1242	4	169 A4.000	**CL309**	1			
1.2 4x4	10.04 -	44	1242	4	188 A4.000	**CL300**	2			twin coil
1.2 4x4	11.09 -	51	1242	4	169 A4.000	**CL309**	1			
1.2 LPG	04.09 -	44	1242	4	188 A4.000	**CL300**	2			twin coil
1.2 LPG	11.10 -	51	1242	4	169 A4.000	**CL309**	1			
1.2 Natural Power	01.07 - 11.09	44	1242	4	188 A4.000	**CL300**	2			twin coil
1.4	10.06 -	74	1368	4	169 A3.000	**CL310**	4	CP072	4	pencil
1.4 Natural Power	09.10 -	57	1368	4	350 A1.000	**CL309**	1			
Panda (312)										
0.9	12.13 -	44	964	2	312 A4.000/312 A6.000	**CL310**	2	CP072	2	pencil
0.9	02.12 -	48	964	2	312 A4.000	**CL310**	2	CP072	2	pencil
0.9	02.12 -	57	875	2	312 A7.000/312 A2.000	**CL325**	2			pencil

FIAT Panda (312) ▶

model	year	kW	cm³	cyl	engine	coil	pcs	boot	pcs	info
FIAT										
Panda (312)										
0.9	02.12 -	63	875	2	312 A2.000	**CL325**	2			pencil
0.9 4x4	09.12 -	63	875	2	312 A2.000	**CL325**	2			pencil
0.9 Natural Power	07.12 -	63	875	2	312 A2.000	**CL325**	2			pencil
1.2	02.12 -	51	1242	4	169 A4.000	**CL309**	1			
1.2 LPG	06.12 -	51	1242	4	169 A4.000	**CL309**	1			
Panda Van (141_)										
750	01.86 - 07.92	25	764	4	141 B.000	**CL308**	1			
1000 i.e	08.92 - 02.04	33	999	4	156 A2.246	**CL300**	2			twin coil
Panda Van (169)										
1.2	09.04 -	44	1242	4	188 A4.000	**CL300**	2			twin coil
1.2 4x4	09.04 -	44	1242	4	188 A4.000	**CL300**	2			twin coil
1.2 LPG	04.09 -	44	1242	4	188 A4.000	**CL300**	2			twin coil
1.2 Natural Power	01.07 - 11.09	44	1242	4	188 A4.000	**CL300**	2			twin coil
1.4 Natural Power	10.09 -	57	1368	4	350 A1.000	**CL309**	1			
Panda Van (312)										
0.9	02.12 -	48	964	2	312 A4.000	**CL310**	2	CP072	2	pencil
1.2	02.12 -	51	1242	4	169 A4.000	**CL309**	1			
1.2 LPG	06.12 -	51	1242	4	169 A4.000	**CL309**	1			
Punto (176)										
55 1.1	09.93 - 09.99	40	1108	4	176 A6.000/176 B2.000	**CL300**	2			twin coil
60 1.2	01.94 - 09.99	43	1242	4	176 A7.000	**CL300**	2			twin coil
60 1.2	03.94 - 09.99	44	1242	4	176 B1.000/176 B4.000	**CL300**	2			twin coil
75 1.2	10.93 - 09.99	54	1242	4	176 A8.000	**CL300**	2			twin coil
1.2 16V	04.97 - 09.99	63	1242	4	176 B9.000	**CL300**	2			twin coil
1.4 GT Turbo	09.96 - 09.99	96	1372	4	176 B6.000	**CL302**	1			
1.4 GT Turbo	01.94 - 09.96	98	1372	4	176 A4.000	**CL302**	1			
1.6	01.94 - 04.97	65	1581	4	176 A9.000	**CL200**	1			
Punto (188)										
1.2 60	09.99 -	44	1242	4	188 A4.000	**CL300**	2			twin coil
1.2 Natural Power	09.03 -	44	1242	4	188 A4.000	**CL300**	2			twin coil
1.2 16V 80	09.99 -	59	1242	4	188 A5.000	**CL302**	1			
1.4	09.03 -	70	1368	4	843 A1.000	**CL310**	4	CP072	4	pencil
1.4	11.05 -	71	1368	4	199 A6.000	**CL310**	4	CP072	4	pencil
1.8 130 HGT	09.99 -	96	1747	4	183 A1.000/188 A6.000	**CL315**	4			pencil
Punto (199)										
0.9 BiFuel	03.12 -	63	875	2	312 A2.000	**CL325**	2			pencil
0.9 TwinAir Turbo	03.12 -	63	875	2	312 A2.000	**CL325**	2			pencil
1.2	03.12 -	51	1242	4	169 A4.000	**CL309**	1			
1.4	03.12 -	55	1368	4	199 A7.000	**CL309**	1			
1.4	03.12 -	57	1368	4	350 A1.000	**CL309**	1			
1.4 BiFuel	03.12 -	57	1368	4	350 A1.000	**CL309**	1			
1.4 Natural Power	03.12 -	57	1368	4	350 A1.000	**CL309**	1			
1.4 Turbo MultiAir	03.12 -	99	1368	4	955 A2.000	**CL326**	4			pencil
Punto Cabriolet (176C)										
60 1.2	04.94 - 06.00	43	1242	4	176 A7.000	**CL300**	2			twin coil
60 1.2	05.95 - 06.00	44	1242	4	176 B1.000/176 B4.000	**CL300**	2			twin coil
85 1.2 16V	04.97 - 06.00	63	1242	4	176 B9.000	**CL300**	2			twin coil
90 1.6	04.94 - 04.97	65	1581	4	176 A9.000	**CL200**	1			
Punto Evo (199)										
1.2	10.09 - 02.12	48	1242	4	199 A4.000	**CL309**	1			
1.2	10.09 - 02.12	51	1242	4	169 A4.000	**CL309**	1			
1.4	07.09 - 02.12	55	1368	4	199 A7.000	**CL309**	1			
1.4	10.09 - 02.12	57	1368	4	350 A1.000	**CL309**	1			
1.4 16V	10.09 - 02.12	77	1368	4	955 A6.000	**CL324**	4			pencil
1.4 16V	10.09 - 02.12	99	1368	4	955 A2.000	**CL326**	4			pencil
1.4 Abarth	10.09 -	120	1368	4	955 A8.000	**CL326**	4			pencil
1.4 LPG	06.09 - 02.12	57	1368	4	350 A1.000	**CL309**	1			
1.4 Natural Power	10.09 - 02.12	57	1368	4	350 A1.000	**CL309**	1			
Punto Van (176L)										
1.1	04.96 - 02.00	40	1108	4	176 B2.000	**CL300**	2			twin coil
Punto Van (188AX)										
1.2 60	02.00 - 10.09	44	1242	4	188 A4.000	**CL300**	2			twin coil
Qubo (225)										
1.4 Natural Power	10.09 -	57	1368	4	350 A1.000	**CL309**	1			
Regata (138)										
75 1.5 i.e.	07.85 - 07.89	55	1498	4	149 C1.000/138 C2.048	**CL303**	1			coil socket: 4x flat contact
						CL313	1			coil socket with 4 pins
Regata Weekend										
75 1.5 i.e. cat	12.86 - 07.89	55	1498	4	138 C2.048	**CL303**	1			

model	year	kW	cm³	cyl	engine	coil	pcs	boot	pcs	info
FIAT										
Ritmo I (138A)										
70 1.3	11.83 - 08.85	48	1301	4	149 A3.000/149 A7.000	**CL308**	1			
75 1.5 i.e.	10.85 - 05.87	55	1498	4	149 C1.000/138 C2.048	**CL308**	1			
Ritmo II (138A)										
75 1.5	09.85 - 12.88	55	1498	4	138 A2.000	**CL308**	1			
75 1.5 cat	09.85 - 12.88	55	1498	4	149 C1.000/138 C2.048	**CL308**	1			
Scudo Combinato (220P)										
1.6	02.96 - 12.06	58	1581	4	220 A 2.000	**CL302**	1			
2.0 16V	06.00 - 12.06	100	1997	4	RFN (EW10J4)	**CL112**	1	CP073	4	rail coil
Scudo Van (220L)										
1.6	02.96 - 12.06	58	1581	4	220 A 2.000	**CL302**	1			
2.0	05.00 - 12.06	100	1997	4	RFN (EW10J4)	**CL112**	1	CP073	4	rail coil
Sedici										
1.6 16V	06.06 - 06.09	79	1586	4	M16A	**CL561**	2			semidirect / pencil / year
	07.09 -	79	1586	4	M16A	**CL236**	4			pencil / year
1.6 16V	06.06 - 06.09	88	1586	4	M16A	**CL561**	2			semidirect / pencil / year
	07.09 -	88	1586	4	M16A	**CL236**	4			pencil / year
1.6 16V 4x4	06.06 - 06.09	79	1586	4	M16A	**CL561**	2			semidirect / pencil / year
	07.09 -	79	1586	4	M16A	**CL236**	4			pencil / year
1.6 16V 4x4	06.06 - 06.09	88	1586	4	M16A	**CL561**	2			semidirect / pencil / year
	07.09 -	88	1586	4	M16A	**CL236**	4			pencil / year
Seicento (187)										
0.9	01.98 - 01.10	29	899	4	1170 A1.046	**CL300**	2			twin coil
1.1	01.98 - 01.10	40	1108	4	187 A1.000/176 B2.000	**CL300**	2			twin coil
Seicento Van (187)										
0.9	01.98 - 01.10	29	899	4	1170 A1.046	**CL300**	2			twin coil
1.1	01.98 - 01.10	40	1108	4	176 B2.000	**CL300**	2			twin coil
Siena (178_)										
1.2	09.98 -	54	1242	4	178 B5.000	**CL300**	2			twin coil
1.4	04.96 -	51	1372	4	178 B2.000	**CL300**	2			twin coil
1.4 cat	04.96 -	51	1372	4	178 B2.016	**CL300**	2			twin coil
1.5	06.04 -	62	1461	4	178 E5.022	**CL300**	2			twin coil
1.6 16V	09.98 -	78	1581	4	178 B3.000	**CL312**	1			
Stilo (192)										
1.2 16V	02.02 - 11.06	59	1242	4	188 A5.000	**CL310**	4	CP072	4	pencil
1.4 16V	01.04 - 11.06	70	1368	4	843 A1.000	**CL310**	4	CP072	4	pencil
1.4 16V	03.05 - 11.06	66	1368	4	192 B2.000	**CL310**	4	CP072	4	pencil
1.6 16V	10.01 - 11.06	76	1596	4	182 B6.000	**CL301**	4			pencil
1.6 16V	05.05 - 11.06	77	1598	4	192 B3.000	**CL221**	1	CP062	4	rail coil
1.6 16V	10.01 - 11.06	98	1747	4	192 A4.000	**CL315**	4			pencil
2.4 20V	10.01 - 11.06	125	2446	5	192 A2.000	**CL311**	5			pencil
Stilo Multi Wagon (192)										
1.4 16V	01.04 - 08.08	70	1368	4	843 A1.000	**CL310**	4	CP072	4	pencil
1.4 16V	03.05 - 08.08	66	1368	4	192 B2.000	**CL310**	4	CP072	4	pencil
1.6 16V	01.03 - 08.08	76	1596	4	182 B6.000	**CL301**	4			pencil
1.8 16V	01.03 - 08.08	98	1747	4	192 A4.000	**CL315**	4			pencil
Strada Pick-up (178E)										
1.2	04.03 -	44	1242	4	188 A4.000	**CL300**	2			twin coil
1.2	06.99 -	54	1242	4	178 B5.000	**CL300**	2			twin coil
Tempra (159)										
1.4 i.e.	03.92 - 02.95	51	1372	4	160 A1.046	**CL313**	1			with distributor / year
	03.95 - 08.96	51	1372	4	836 A4.000	**CL302**	1			without distributor / year
1.4 i.e.	03.91 - 08.96	57	1372	4	159 A2.000	**CL304**	1			
1.6	03.90 - 04.93	63	1581	4	159 A3.000	**CL313**	1			
1.6 i.e.	06.92 - 08.96	55	1581	4	835 C1.000	**CL302**	1			without distributor
	06.92 - 08.96	55		4	159 A3.048	**CL313**	1			with distributor / engine code
1.6 i.e.	06.90 - 07.92	57	1581	4	159 A3.046	**CL313**	1			
1.6 i.e.	06.94 - 08.96	66	1581	4	159 B9.000	**CL302**	1			
1.8 i.e.	09.93 - 08.96	66	1756	4	835 C4.000	**CL300**	2			twin coil
1.8 i.e.	10.94 - 08.96	74	1756	4	836 A5.000	**CL300**	2			twin coil
1.8 i.e.	09.93 - 08.96	76	1756	4	835 C2.000	**CL300**	2			twin coil
Tempra S.W. (159)										
1.4 i.e.	10.92 - 08.96	51	1372	4	836 A4.000	**CL302**	1			without distributor
				4	160 A1.046	**CL313**	1			with distributor / engine code
1.4 i.e.	03.91 - 08.96	57	1372	4	159 A2.000	**CL304**	1			
1.6	12.90 - 04.93	63	1581	4	159 A3.000	**CL313**	1			
1.6 i.e.	10.92 - 08.96	55	1581	4	835 C1.000	**CL302**	1			without distributor
				4	159 A3.048	**CL313**	1			with distributor / engine code
1.6 i.e.	10.90 - 08.96	57	1581	4	835 C1.000	**CL302**	1			without distributor
				4	159 A3.046	**CL313**	1			with distributor / engine code
1.6 i.e.	06.94 - 08.96	66	1581	4	159 B9.000	**CL302**	1			
1.8 i.e.	09.93 - 08.96	66	1756	4	835 C4.000	**CL300**	2			twin coil

FIAT Tempra S.W. (159) ▶

model	year	kW	cm³	cyl	engine	coil	pcs	boot	pcs	info
FIAT										
Tempra S.W. (159)										
1.8 i.e.	10.94 - 08.96	74	1756	4	836 A5.000	**CL300**	2			twin coil
1.8 i.e.	09.93 - 08.96	76	1756	4	835 C2.000	**CL300**	2			twin coil
Tipo (160)										
1.1	01.88 - 10.91	41	1108	4	160 A3.000	**CL304**	1			
1.4	07.87 - 12.89	52	1372	4	160 A1.000	**CL304**	1			engine code
				4	160 A1.048	**CL313**	1			engine code
1.4 i.e.	05.89 - 04.95	51	1372	4	836 A4.000	**CL302**	1			without distributor / engine code
				4	160 A1.046	**CL304**	1			with distributor - 1st coil
				4	160 A1.046	**CL313**	1			with distributor - 2nd coil
1.4 i.e.	05.89 - 04.95	57	1372	4	159 A2.000	**CL304**	1			
1.6	01.88 - 10.91	61	1581	4	160 A2.000	**CL313**	1			
1.6 i.e.	10.92 - 04.95	55	1581	4	835 C1.000	**CL302**	1			without distributor / engine code
				4	159 A3.048	**CL313**	1			with distributor / engine code
1.6 i.e.	07.90 - 01.93	57	1581	4	159 A3.046	**CL313**	1			
1.8 i.e.	09.93 - 04.95	66	1756	4	835 C4.000	**CL300**	2			twin coil
1.8 i.e	03.93 - 04.95	71	1756	4	836 A5.000	**CL300**	2			twin coil
1.8 i.e.	10.94 - 10.95	74	1756	4	836 A5.000/159 A4.000	**CL300**	2			twin coil
1.8 i.e.	04.93 - 04.95	76	1756	4	835 C2.000	**CL300**	2			twin coil
Ulysse (179AX)										
2.0	08.02 - 06.11	100	1997	4	RFN (EW10J4)	**CL112**	1	CP073	4	rail coil
3.0	08.02 - 06.11	150	2946	6	XFW	**CL135**	6			pencil
Ulysse (220)										
1.8	05.97 - 08.02	73	1761	4	LFW	**CL107**	1			
2.0	06.94 - 08.02	89	1998	4	RFU (XU10J2C)	**CL107**	1			
2.0 16V	09.00 - 08.02	100	1997	4	RFN (EW10J4)	**CL112**	1	CP073	4	rail coil
2.0 Turbo	06.94 - 08.02	108	1998	4	RGX (XU10J2CTE)	**CL107**	1			
Uno (146A/E)										
45 1.0	06.86 - 12.87	32	999	4	156 A2.048/156 A2.100	**CL308**	1			year
	01.88 - 12.93	32	999	4	156 A2.048/156 A2.100	**CL304**	1			year
45 1.0 i.e.	04.84 - 12.87	33	999	4	156 A2.246	**CL308**	1			year
	01.88 - 10.95	33	999	4	156 A2.246	**CL304**	1			year
50 1.1	01.90 - 12.93	37	1108	4	156 C.046	**CL304**	1			
50 1.1 i.e.	06.92 - 12.93	36	1116	4	146 C3.000	**CL304**	1			
60 1.1	04.89 - 12.92	42	1108	4	160 A3.000	**CL304**	1			
60 1.1	06.86 - 12.87	43	1116	4	146 A4.048	**CL308**	1			year
	01.88 - 12.93	43	1116	4	146 A4.048	**CL304**	1			year
70 1.4 i.e.	09.89 - 12.93	51	1372	4	160 A1.046	**CL313**	1			
70 1.4 i.e.	09.89 - 12.93	53	1372	4	146 C1.000	**CL313**	1			
70 1.4 S	09.89 - 10.92	52	1372	4	160 A1.048	**CL313**	1			
75 1.5 i.e.	01.89 - 12.89	55	1499	4	138 C2.048	**CL308**	1			year / engine code
	10.85 - 12.93	55	1499	4	149 C1.000	**CL313**	1			year / engine code
FORD										
B-MAX (JK)										
1.0 EcoBoost	10.12 -	74	998	3	SFJA/SFJB/SFJD/SFJC	**CL416**	3			pencil
1.0 EcoBoost	10.12 -	88	998	3	M1JA	**CL416**	3			pencil
1.0 EcoBoost	10.12 -	92	998	3	M1JE	**CL416**	3			pencil
1.4	10.12 -	66	1388	4	SPJD	**CL403**	1			
1.4 LPG	08.13 -	63	1388	4	RTJC	**CL403**	1			
1.4 LPG	08.13 -	66	1388	4	RTJC	**CL403**	1			
1.6 Ti	10.12 -	77	1596	4	IQJA	**CL403**	1			
B-MAX Van										
1.4	10.12 -	66	1388	4	SPJD	**CL403**	1			
1.6 Ti	10.12 -	77	1596	4	IQJA	**CL403**	1			
C-MAX (DM2)										
1.6	02.07 - 09.10	74	1596	4	SHDA/HWDB/SHDB/HWDA	**CL403**	1			
1.8	02.07 - 09.10	92	1798	4	QQDA/QQDB	**CL405**	4	CP048	4	pencil
1.8 Flexifuel	02.07 - 09.10	92	1798	4	Q7DA	**CL405**	4	CP048	4	pencil
2.0	02.07 - 09.10	107	1999	4	AODA/AODB/SYDA/AODE	**CL405**	4	CP048	4	pencil
2.0 CNG	04.09 - 09.10	107	1999	4	SYDA	**CL405**	4	CP048	4	pencil
2.0 LPG	06.08 - 09.10	107	1999	4	SYDA	**CL405**	4	CP048	4	pencil
C-MAX II										
1.6 Flexifuel	02.11 -	88	1596	4	MUDA	**CL403**	1			
1.6 LPG	02.12 -	88	1596	4	MUDA	**CL403**	1			
1.6 Ti	12.10 -	63	1596	4	XTDA	**CL403**	1			
1.6 Ti	12.10 -	77	1596	4	IQDB/IQDA	**CL403**	1			
1.6 Ti	02.12 -	88	1596	4	MUDA	**CL403**	1			
1.6 Ti	12.10 -	92	1596	4	PNDA	**CL403**	1			
C-MAX II (DXA/CB7, DXA/CEU)										
1.0 EcoBoost	10.12 -	74	998	3	M2DA/SFDA	**CL416**	3			pencil
1.0 EcoBoost	10.12 -	92	998	3	M1DA	**CL416**	3			pencil
1.6 LPG	02.12 -	86	1596	4	MUDA	**CL403**	1			

model	year	kW	cm³	cyl	engine	coil	pcs	boot	pcs	info
FORD										
Cougar (EC_)										
2.0 16V	08.98 - 12.01	96	1988	4	EDBB/EDBC/EDBD/EDBA	**CL401**	1			coil design
						CL409	1			coil design
2.5 ST 200	01.00 - 12.01	151	2495	6	SGA	**CL408**	1			
2.5 V6 24V	08.98 - 12.01	125	2544	6	LCBA	**CL408**	1			
2.5 V6 24V	06.00 - 12.01	125	2495	6	LCBC/LCBB/LCBE	**CL408**	1			
Ecosport										
1.0 EcoBoost	10.13 -	92	998	3	M1JC	**CL416**	3			pencil
Escort´86 Express (AVF)										
1.3	02.86 - 07.90	44	1297	4	JLA/JBB/JLB	**CL400**	1			
1.3	07.88 - 07.90	46	1297	4	JBA	**CL400**	1			
Escort´91 Express (AVL)										
1.3	07.90 - 12.94	46	1299	4	JBD	**CL400**	1			
1.4	07.90 - 12.94	52	1391	4	F6F/F6G	**CL400**	1			
Escort´95 Express (AVL)										
1.4	01.95 -	54	1391	4	F4B	**CL400**	1			
Escort Classic (AAL, ABL)										
1.6 16V	10.98 - 07.00	66	1597	4	L1E	**CL400**	1			
1.6 16V	02.99 - 07.00	66	1597	4	L1E	**CL400**	1			
Escort IV (GAF, AWF, ABFT)										
1.3	07.88 - 10.90	46	1297	4	JBA	**CL400**	1			
1.6 i	08.89 - 07.90	75	1597	4	LJB	**CL400**	1			
1.6 XR3i	01.86 - 08.89	77	1597	4	LRB/LR2	**CL400**	1			
Escort IV Cabriolet (ALF)										
1.6 i	08.89 - 07.90	75	1597	4	LJB	**CL400**	1			
Escort IV Combi (AWF, AVF)										
1.3	01.86 - 07.90	44	1297	4	JLA/JBB/JLB	**CL400**	1			
Escort V (GAL)										
1.4	07.90 - 09.92	52	1392	4	F6F/F6G	**CL400**	1			
1.6	07.90 - 12.92	77	1598	4	LJF	**CL400**	1			
1.8 16V XR3i	02.92 - 12.92	77	1796	4	RDA	**CL400**	1			
1.8 16V XR3i	02.92 - 12.92	96	1796	4	RQB	**CL400**	1			
RS 2000	05.91 - 12.92	110	1998	4	N7A	**CL404**	2			semidirect / pencil
Escort V Cabriolet (ALL)										
1.4	07.90 - 12.92	52	1392	4	F6F/F6G	**CL400**	1			
1.6	07.90 - 12.92	77	1598	4	LJF	**CL400**	1			
1.8 16V XR3i	02.92 - 12.92	77	1796	4	RDA	**CL400**	1			
1.8 16V XR3i	02.92 - 12.92	96	1796	4	RQB	**CL400**	1			
Escort V Combi (GAL, AVL)										
1.4	07.90 - 09.92	52	1392	4	F6F/F6G	**CL400**	1			
1.6	07.90 - 09.92	77	1598	4	LJF	**CL400**	1			
1.8 16V	02.92 - 12.92	77	1796	4	RDA	**CL400**	1			
Escort VI (GAL)										
1.3	09.92 - 01.95	44	1299	4	J6A/J4B	**CL400**	1			
1.4	09.92 - 01.95	52	1391	4	F6F/F6G	**CL400**	1			
1.4	01.94 - 01.95	55	1391	4	F4B/FUH	**CL400**	1			
1.6 i 16V	01.94 - 01.95	65	1597	4	L1H	**CL400**	1			
1.6 i 16V	09.92 - 01.95	66	1597	4	L1E	**CL400**	1			
1.8 i 16V	09.92 - 01.95	77	1796	4	RDA	**CL400**	1			
1.8 XR3i 16V	09.92 - 01.95	96	1796	4	RQB	**CL400**	1			
1.8 XR3i 16V 4x4	08.93 - 01.95	77	1796	4	RDA	**CL400**	1			
1.8 XR3i 16V 4x4	08.93 - 01.95	96	1796	4	RQB	**CL400**	1			
RS 2000	09.92 - 01.95	110	1998	4	N7A	**CL404**	2			semidirect / pencil
RS 2000 4x4	08.93 - 01.95	110	1998	4	N7A	**CL404**	2			semidirect / pencil
Escort VI Cabriolet (ALL)										
1.4	12.92 - 04.94	52	1392	4	F6F/F6G	**CL400**	1			
1.4 i	07.93 - 01.95	55	1391	4	F4B	**CL400**	1			
1.6 16V XR3i	12.92 - 01.95	66	1597	4	L1E	**CL400**	1			
1.6 i 16V	02.94 - 01.95	65	1597	4	L1H	**CL400**	1			
1.8 16V XR3i	12.92 - 01.95	77	1796	4	RDA	**CL400**	1			
1.8 16V XR3i	12.92 - 01.95	96	1796	4	RQB	**CL400**	1			
Escort VI Combi (GAL)										
1.3	09.92 - 01.95	44	1299	4	J6A/J4B	**CL400**	1			
1.4	09.92 - 01.95	52	1391	4	F6F/F6G	**CL400**	1			
1.4	01.94 - 01.95	55	1391	4	F4B/FUH	**CL400**	1			
1.6 i 16V	01.94 - 01.95	65	1597	4	L1H	**CL400**	1			
1.6 i 16V	09.92 - 01.95	66	1597	4	L1E	**CL400**	1			
1.8 i 16V	01.93 - 01.95	77	1796	4	RDA	**CL400**	1			
1.8 i 16V	02.93 - 01.95	96	1796	4	RQB	**CL400**	1			
Escort VI Sedan (GAL)										
1.3	08.93 - 01.95	44	1299	4	J6A/J4B	**CL400**	1			
1.4	08.93 - 04.94	52	1392	4	F6F/F6G	**CL400**	1			

FORD Escort VI Sedan (GAL) ▶

model	year	kW	cm³	cyl	engine	coil	pcs	boot	pcs	info
FORD										
Escort VI Sedan (GAL)										
1.4	08.93 - 01.95	55	1391	4	F4B/FUH	**CL400**	1			
1.6 i 16V	01.94 - 01.95	65	1597	4	L1H	**CL400**	1			
1.6 i 16V	08.93 - 01.95	66	1597	4	L1E/L1K	**CL400**	1			
1.8 i 16V	08.93 - 01.95	77	1796	4	RDA	**CL400**	1			
Escort VII (GAL, AAL, ABL)										
1.3	01.95 - 08.98	44	1299	4	J6A/J4B	**CL400**	1			DIN / year
	09.98 - 10.98	44	1299	4	J4B	**CL401**	1			PIN / year / coil design
	09.98 - 10.98	44	1299	4	J4B	**CL409**	1			PIN / year / coil design
1.4	01.95 - 10.98	55	1391	4	F4B	**CL400**	1			
1.6 16V	01.95 - 10.98	66	1597	4	L1E	**CL400**	1			
1.6 16V 4x4	01.95 - 10.98	66	1597	4	L1E	**CL400**	1			
1.6 i 16V	01.95 - 08.95	65	1597	4	L1H	**CL400**	1			
1.8 16V	01.95 - 08.95	77	1796	4	RDA	**CL400**	1			
1.8 16V	01.95 - 10.98	85	1796	4	RKC	**CL400**	1			
RS 2000	02.95 - 02.98	110	1998	4	N7A	**CL404**	2			semidirect / pencil
RS 2000 4x4	02.95 - 10.98	110	1998	4	N7A	**CL404**	2			semidirect / pencil
Escort VII Cabriolet (ALL)										
1.4	02.95 - 08.98	55	1391	4	F4B	**CL400**	1			
1.6 16V XR3i	02.95 - 12.96	65	1597	4	L1H	**CL400**	1			
1.6 16V XR3i	02.95 - 09.99	66	1597	4	L1E	**CL400**	1			
1.8 16V XR3i	02.95 - 08.98	77	1796	4	RDA	**CL400**	1			
1.8 16V XR3i	10.95 - 08.98	85	1796	4	RKC	**CL400**	1			
1.8 16V XR3i	02.95 - 08.00	96	1796	4	RQB	**CL400**	1			
Escort VII Combi (GAL, ANL)										
1.3	01.95 - 08.98	44	1299	4	J6A/J4B	**CL400**	1			DIN / year
	09.98 - 01.99	44	1299	4	J4B	**CL401**	1			PIN / year / coil design
	09.98 - 01.99	44	1299	4	J4B	**CL409**	1			PIN / year / coil design
1.4	01.95 - 02.99	55	1391	4	F4B/FUH	**CL400**	1			
1.6 16V	01.95 - 02.99	66	1597	4	L1E	**CL400**	1			
1.6 i 16V	01.95 - 08.95	65	1597	4	L1H	**CL400**	1			
1.8 16V	01.95 - 08.95	77	1796	4	RDA	**CL400**	1			
1.8 16V	01.95 - 02.99	85	1796	4	RKC	**CL400**	1			
Escort VII Sedan (GAL, AFL)										
1.3	01.95 - 08.98	44	1299	4	J6A/J4B	**CL400**	1			DIN / year
	09.98 - 02.99	44	1299	4	J4B	**CL401**	1			PIN / year / coil design
	09.98 - 02.99	44	1299	4	J4B	**CL409**	1			PIN / year / coil design
1.4	01.95 - 02.99	55	1391	4	F4B/FUH	**CL400**	1			
1.6 i 16V	01.95 - 08.95	65	1597	4	L1H	**CL400**	1			
1.6 i 16V	01.95 - 02.99	66	1597	4	L1E/L1K	**CL400**	1			
1.8 16V	01.95 - 08.95	77	1796	4	RDA	**CL400**	1			
1.8 16V	01.95 - 02.99	85	1796	4	RKC	**CL400**	1			
Fiesta III (GFJ)										
1.0	03.89 - 12.95	33	1001	4	TLB	**CL400**	1			
1.1	03.89 - 12.95	37	1119	4	G6A	**CL400**	1			
1.1	03.89 - 12.95	40	1119	4	GUD/GUE	**CL400**	1			
1.3	03.89 - 12.92	44	1299	4	JBC	**CL400**	1			
1.3	03.89 - 12.95	44	1297	4		**CL400**	1			
1.3 cat	05.91 - 01.97	44	1299	4	J6B	**CL400**	1			
1.4	03.89 - 12.95	52	1391	4	F6E	**CL400**	1			
1.4	03.89 - 12.95	54	1391	4	FUG/FUJ	**CL400**	1			
1.4 cat	03.89 - 12.95	54	1391	4	F4A	**CL400**	1			
1.6	01.89 - 01.94	65	1597	4	LUH	**CL400**	1			
1.6 i 16V	01.94 - 12.95	65	1597	4	L1G	**CL400**	1			
1.6 Turbo	03.90 - 10.92	96	1598	4	LHA	**CL400**	1			
1.6 XR2i	03.89 - 03.93	76	1598	4	LJD	**CL400**	1			
1.6 XR2i	03.89 - 01.94	81	1597	4	LJC	**CL400**	1			
1.8 16V	02.92 - 12.95	77	1796	4	RDB	**CL400**	1			
1.8 XR2i 16V	02.92 - 12.95	96	1796	4	RQC	**CL400**	1			
Fiesta IV (JA_, JB_)										
1.0 i	02.97 - 09.98	38	999	4	ZH10JRB	**CL400**	1			DIN / year
	09.98 - 09.99	38	999	4	ZH10JRB	**CL401**	1			PIN / year
1.25 i 16V	08.95 - 04.98	55	1242	4	DHG/DHB/DHC/DHE/DHF/DHA	**CL400**	1			DIN / year
	05.98 - 01.02	55	1242	4	DHG/DHB/DHC/DHE/DHF/DHA	**CL401**	1			PIN / year / coil design
	05.98 - 01.02	55	1242	4	DHG/DHB/DHC/DHE/DHF/DHA	**CL409**	1			PIN / year / coil design
1.3 i	08.95 - 08.98	37	1299	4	JJA/JJE/JJM/JJC/JJJ/JJK	**CL400**	1			DIN / year
	09.98 - 01.02	37	1299	4	JJA/JJE/JJM/JJC/JJJ/JJK	**CL401**	1			PIN / year / coil design
	09.98 - 01.02	37	1299	4	JJA/JJE/JJM/JJC/JJJ/JJK	**CL409**	1			PIN / year / coil design
1.3 i	08.95 - 08.98	44	1299	4	J4R/JBC/J4C/J4L/J4J/J4Q/J4T	**CL400**	1			DIN / year
	09.98 - 01.02	44	1299	4	J4R/JBC/J4C/J4L/J4J/J4Q/J4T	**CL401**	1			PIN / year / coil design
	09.98 - 01.02	44	1299	4	J4R/JBC/J4C/J4L/J4J/J4Q/J4T	**CL409**	1			PIN / year / coil design

FORD Fiesta IV (JA_, JB_) ▶

model	year	kW	cm³	cyl	engine	coil	pcs	boot	pcs	info
FORD										
Fiesta IV (JA_, JB_)										
1.4 i 16V	04.96 - 04.98	66	1388	4	FHE/FHA	**CL400**	1			DIN / year
	05.98 - 01.02	66	1388	4	FHE/FHA	**CL401**	1			PIN / year / coil design
	05.98 - 01.02	66	1388	4	FHE/FHA	**CL409**	1			PIN / year / coil design
1.6 16V Sport	02.00 - 01.02	76	1596	4	L1V/L1T	**CL401**	1			coil design
						CL409	1			coil design
Fiesta V (JH_, JD_)										
1.25 16V	05.02 - 02.05	51	1242	4	M7JA/M7JB	**CL409**	1			year
	03.05 - 06.08	51	1242	4	M7JA/M7JB	**CL403**	1			year
1.25 16V	05.02 - 02.05	55	1242	4	FUJA/FUJB	**CL409**	1			year
	03.05 - 06.08	55	1242	4	FUJA/FUJB	**CL403**	1			year
1.3	11.01 - 06.08	44	1299	4	BAJA	**CL401**	1			coil design
						CL409	1			coil design
1.3	11.01 - 06.08	51	1299	4	A9JA/A9JB	**CL401**	1			coil design
						CL409	1			coil design
1.4 16V	11.01 - 01.05	59	1388	4	FXJB/FXJA	**CL401**	1			year / coil design
	11.01 - 01.05	59	1388	4	FXJB/FXJA	**CL409**	1			year / coil design
	02.05 - 06.08	59	1388	4	FXJB/FXJA	**CL403**	1			year
1.6 16V	11.01 - 01.05	74	1596	4	FYJA/FYJB	**CL401**	1			year / coil design
	11.01 - 01.05	74	1596	4	FYJA/FYJB	**CL409**	1			year / coil design
	02.05 - 06.08	74	1596	4	FYJA/FYJB	**CL403**	1			year
2.0 ST150	03.05 - 06.08	110	1999	4	N4JB	**CL406**	1			
Fiesta V Van										
1.3	10.03 - 07.05	51	1299	4	A9JA/A9JB	**CL401**	1			coil design
						CL409	1			coil design
Fiesta VI										
1.0	01.13 -	48	998	3	XMJA/XMJB	**CL416**	3			pencil
1.0	10.12 -	59	998	3	P4JC/P4JD/P4JA/P4JB	**CL416**	3			pencil
1.0 EcoBoost	01.13 -	74	998	3	SFJA/SFJB/SFJD/SFJC	**CL416**	3			pencil
1.0 EcoBoost	09.12 -	92	998	3	M1JE	**CL416**	3			pencil
1.0 Sport	05.14 -	103	998	3	YYJA/YYJB	**CL416**	3			pencil
1.25	06.08 -	44	1242	4	STJA/STJB	**CL403**	1			
1.25	06.08 -	60	1242	4	SNJA/SNJB	**CL403**	1			
1.4	06.08 -	71	1388	4	SPJA/SPJC	**CL403**	1			
1.4 LPG	01.09 -	71	1388	4	RTJA/RTJB	**CL403**	1			
1.6 Ti	09.12 -	77	1596	4	IQJA	**CL403**	1			
1.6 Ti	06.08 -	88	1596	4	HXJB/HXJA	**CL403**	1			
1.6 Ti	12.10 -	99	1596	4	U5JA	**CL403**	1			
Fiesta VI Van										
1.25	01.09 -	60	1242	4	SNJA/SNJB	**CL403**	1			
Fiesta Van (F3L, F5L)										
1.3	09.91 - 02.96	44	1299	4	J6B	**CL400**	1			
Fiesta Van (J5_, J3_)										
1.3	02.96 - 08.98	44	1299	4	J4C	**CL400**	1			DIN / year
	09.98 -	44	1299	4	J4C	**CL401**	1			PIN / year
1.4 i	04.96 - 10.99	66	1388	4	FHA	**CL400**	1			
Focus (DAW, DBW)										
1.4 16V	10.98 - 11.04	55	1388	4	FXDA/FXDD/FXDC/FXDB	**CL401**	1			
1.6 16V	10.98 - 11.04	74	1596	4	FYDH/FYDA/FYDB/FYDD/_DC	**CL401**	1			coil design
						CL409	1			coil design
1.8 16V	10.98 - 11.04	85	1796	4	EYDD/_DC/_DE/_DL/_DF/EY_	**CL401**	1			coil design
						CL409	1			coil design
2.0 16V	10.98 - 11.04	96	1988	4	EDDC/EDDB/EDDD/EDDF	**CL401**	1			coil design
						CL409	1			
2.0 RS	10.02 - 11.04	158	1988	4	HMDA	**CL401**	1			coil design
						CL409	1			coil design
2.0 ST170	03.02 - 11.04	127	1988	4	ALDA	**CL401**	1			coil design
						CL409	1			coil design
Focus Combi (DNW)										
1.4 16V	02.99 - 11.04	55	1388	4	FXDA/FXDD/FXDC/FXDB	**CL401**	1			
1.6 16V	02.99 - 11.04	74	1596	4	FYDH/FYDA/FYDB/FYDD/_DC	**CL401**	1			
1.8 16V	02.99 - 11.04	85	1796	4	EYDD/_DC/_DE/_DL/_DF/EY_	**CL401**	1			
2.0 16V	02.99 - 11.04	96	1988	4	EDDC/EDDB/EDDD/EDDF	**CL401**	1			coil design
						CL409	1			coil design
2.0 ST170	08.02 - 11.04	127	1988	4	ALDA	**CL401**	1			
Focus Sedan (DFW)										
1.4 16V	02.99 - 11.04	55	1388	4	FXDA/FXDD/FXDC/FXDB	**CL401**	1			
1.6 16V	02.99 - 11.04	74	1596	4	FYDH/FYDA/FYDB/FYDD/_DC	**CL401**	1			
1.8 16V	02.99 - 11.04	85	1796	4	EYDD/_DC/_DE/_DL/_DF/EY_	**CL401**	1			
2.0 16V	02.99 - 11.04	96	1988	4	EDDC/EDDB/EDDD/EDDF	**CL401**	1			coil design
						CL409	1			coil design

FORD ▶

model	year	kW	cm³	cyl	engine	coil	pcs	boot	pcs	info
FORD										
Focus C-MAX										
1.6	10.03 - 02.05	74	1596	4	HWDB/HWDA	**CL409**	1			year
	03.05 - 03.07	74	1596	4	HWDB/HWDA	**CL403**	1			year
1.8	10.03 - 03.07	88	1798	4	CSDB/CSDA	**CL405**	4	CP048	4	pencil
1.8	04.04 - 03.07	92	1798	4	QQDA/QQDB/Q7DA	**CL405**	4	CP048	4	pencil
1.6 Ti	08.04 - 02.05	85	1596	4	SIDA/HXDA	**CL409**	1			year
	03.05 - 03.07	85	1596	4	SIDA/HXDA	**CL403**	1			year
1.8 Flexifuel	01.06 - 03.07	92	1798	4	Q7DA	**CL405**	4	CP048	4	pencil
2.0	03.04 - 03.07	107	1999	4	AODA/AODB/SYDA	**CL405**	4	CP048	4	pencil
Focus II (DA_)										
1.4	11.04 - 02.05	59	1388	4	ASDB/ASDA	**CL409**	1			year
	03.05 - 09.12	59	1388	4	ASDB/ASDA	**CL403**	1			year
1.6	11.04 - 02.05	74	1596	4	SHDA/HWDB/SHDB/HWDA	**CL409**	1			year
	03.05 - 09.12	74	1596	4	SHDA/HWDB/SHDB/HWDA	**CL403**	1			year
1.6 LPG	10.09 - 07.11	85	1596	4	SIDA	**CL403**	1			
1.6 Ti	11.04 - 02.05	85	1596	4	HXDB/SIDA/HXDA	**CL409**	1			year
	03.05 - 09.12	85	1596	4	HXDB/SIDA/HXDA	**CL403**	1			year
1.8	03.06 - 09.12	92	1798	4	QQDB	**CL405**	4	CP048	4	pencil
1.8 Flexifuel	01.06 - 09.12	92	1798	4	Q7DA	**CL405**	4	CP048	4	pencil
2.0	11.04 - 01.08	107	1999	4	AODA/AODB	**CL405**	4	CP048	4	pencil
2.0 CNG	04.09 - 07.11	107	1999	4	SYDA	**CL405**	4	CP048	4	pencil
2.0 LPG	06.08 - 07.11	107	1999	4	SYDA	**CL405**	4	CP048	4	pencil
2.5 RS	01.09 - 07.11	224	2521	5	JZDA	**CL410**	5	CP035	5	pencil
2.5 RS 500	05.10 - 07.11	257	2521	5	JZDA	**CL410**	5	CP035	5	pencil
2.5 ST	10.05 - 09.12	166	2522	5	HYDA	**CL410**	5	CP035	5	pencil
Focus II Cabriolet										
1.6	10.06 - 07.11	74	1596	4	SHDA/HWDB/SHDB/HWDA	**CL403**	1			
2.0	10.06 - 07.11	107	1999	4	AODA/AODB	**CL405**	4	CP048	4	pencil
Focus II Combi (DA_)										
1.4	11.04 - 02.05	59	1388	4	ASDB/ASDA	**CL409**	1			year
	03.05 - 09.12	59	1388	4	ASDB/ASDA	**CL403**	1			year
1.6	11.04 - 02.05	74	1596	4	SHDA/HWDB/SHDB/HWDA	**CL409**	1			year
	03.05 - 07.11	74	1596	4	SHDA/HWDB/SHDB/HWDA	**CL403**	1			year
1.6 LPG	10.09 - 09.12	85	1596	4	SIDA	**CL403**	1			
1.6 Ti	11.04 - 02.05	85	1596	4	HXDB/SIDA/HXDA	**CL409**	1			year
	03.05 - 01.08	85	1596	4	HXDB/SIDA/HXDA	**CL403**	1			year
1.8	03.06 - 09.12	92	1798	4	QQDB/Q7DA	**CL405**	4	CP048	4	pencil
1.8 Flexifuel	01.06 - 09.12	92	1798	4	Q7DA	**CL405**	4	CP048	4	pencil
2.0	11.04 - 01.08	107	1999	4	AODA/AODB	**CL405**	4	CP048	4	pencil
2.0 LPG	06.08 - 07.11	107	1999	4	SYDA	**CL405**	4	CP048	4	pencil
Focus II Sedan (DA_)										
1.4	04.05 - 09.12	59	1388	4	ASDB/ASDA	**CL403**	1			
1.6	04.05 - 01.08	74	1596	4	SHDA/HWDB/SHDB/HWDA	**CL403**	1			
1.6 Ti	04.05 - 01.08	85	1596	4	HXDB/SIDA/HXDA	**CL403**	1			
1.8	03.06 - 01.08	92	1798	4	QQDB	**CL405**	4	CP048	4	pencil
1.8 Flexifuel	06.06 - 07.11	92	1798	4	Q7DA	**CL405**	4	CP048	4	pencil
2.0	04.05 - 07.11	107	1999	4	AODA/AODB	**CL405**	4	CP048	4	pencil
Focus III										
1.0 EcoBoost	02.12 -	92	998	3	M1DA	**CL416**	3			pencil
1.0 EcoBoost	02.12 -	74	998	3	M2DA	**CL416**	3			pencil
1.6 EcoBoost	04.11 -	110	1596	4	JQDA/YUDA/JQDB	**CL414**	4			pencil
1.6 EcoBoost	04.11 -	134	1596	4	JTDB/JTDA	**CL414**	4			pencil
1.6 Flexifuel	04.11 -	88	1596	4	MUDA	**CL403**	1			
1.6 LPG	02.12 -	88	1596	4	MUDA	**CL403**	1			
1.6 LPG	02.12 -	86	1596	4	MUDA	**CL403**	1			
1.6 Ti	08.11 -	63	1596	4	XTDA	**CL403**	1			
1.6 Ti	04.11 -	77	1596	4	IQDB	**CL403**	1			
1.6 Ti	02.12 -	88	1596	4	MUDA	**CL403**	1			
1.6 Ti	04.11 -	92	1596	4	PNDA	**CL403**	1			
2.0 ST	07.12 -	184	1999	4	R9DA	**CL415**	4			pencil
Focus III Sedan										
1.0 EcoBoost	02.12 -	74	998	3	M2DA	**CL416**	3			pencil
1.0 EcoBoost	02.12 -	92	998	3	M1DA	**CL416**	3			pencil
1.6 EcoBoost	04.11 -	110	1596	4	JQDA/YUDA/JQDB	**CL414**	4			pencil
1.6 EcoBoost	04.11 -	134	1596	4	JTDB/JTDA	**CL414**	4			pencil
1.6 Flexifuel	04.11 -	88	1596	4	MUDA	**CL403**	1			
1.6 Ti	08.11 -	63	1596	4	XTDA	**CL403**	1			
1.6 Ti	04.11 -	77	1596	4	IQDB	**CL403**	1			
1.6 Ti	04.11 -	92	1596	4	PNDA	**CL403**	1			
Focus III Turnier										
1.0 EcoBoost	02.12 -	74	998	3	M2DA	**CL416**	3			pencil
1.0 EcoBoost	02.12 -	92	998	3	M1DA	**CL416**	3			pencil

FORD Focus III Turnier ▶

model	year	kW	cm³	cyl	engine	coil	pcs	boot	pcs	info
FORD										
Focus III Turnier										
1.6 EcoBoost	05.11 -	110	1596	4	JQDA/YUDA/JQDB	**CL414**	4			pencil
1.6 EcoBoost	05.11 -	134	1596	4	JTDB/JTDA	**CL414**	4			pencil
1.6 Flexifuel	05.11 -	88	1596	4	MUDA	**CL403**	1			
1.6 LPG	02.12 -	86	1596	4	MUDA	**CL403**	1			
1.6 LPG	02.12 -	88	1596	4	MUDA	**CL403**	1			
1.6 Ti	08.11 -	63	1596	4	XTDA	**CL403**	1			
1.6 Ti	05.11 -	77	1596	4	IQDB	**CL403**	1			
1.6 Ti	02.12 -	88	1596	4	MUDA	**CL403**	1			
1.6 Ti	05.11 -	92	1596	4	PNDA	**CL403**	1			
2.0 ST	07.12 -	184	1999	4	R9DA	**CL415**	4			pencil
Fusion (JU_)										
1.25	08.04 - 12.12	55	1242	4	FUJA/FUJB	**CL403**	1			
1.4	08.02 - 01.05	59	1388	4	FXJC/FXJB/FXJA	**CL401**	1			year / coil design
	08.02 - 01.05	59	1388	4	FXJC/FXJB/FXJA	**CL409**	1			year / coil design
	02.05 - 12.12	59	1388	4	FXJC/FXJB/FXJA	**CL403**	1			year
1.6	08.02 - 01.05	74	1596	4	FYJC/FYJA/FYJB	**CL401**	1			year / coil design
	08.02 - 01.05	74	1596	4	FYJC/FYJA/FYJB	**CL409**	1			year / coil design
	02.05 - 11.08	74	1596	4	FYJC/FYJA/FYJB	**CL403**	1			year
Galaxy (WGR)										
2.0 i	11.95 - 03.00	85	1998	4	NSE	**CL402**	2			year / engine code
	02.01 - 05.06	85	1998	4	ZVSA	**CL409**	1			year / engine code
2.3 16V	09.01 - 05.06	103	2295	4	E5SB	**CL401**	1			
2.3 16V	01.97 - 03.00	107	2295	4	Y5B	**CL404**	2			year / semidirect / pencil
	04.00 - 05.06	107	2295	4	E5SA	**CL401**	1			year / coil 4xPIN / engine code
2.8 i V6	11.95 - 04.00	128	2792	6	AAA	**CL021**	1			
2.8 i V6 4x4	04.96 - 04.00	128	2792	6	AAA	**CL021**	1			
2.8 V6	04.00 - 05.06	150	2792	6	AYL	**CL023**	1			pencil
Galaxy (WA6)										
1.6 EcoBoost	11.10 - 06.15	118	1596	4	JTWA/JTWB	**CL414**	4			pencil
2.0	05.06 - 06.15	107	1999	4	AOWB/AOWA	**CL405**	4	CP048	4	pencil
2.0 EcoBoost	07.10 - 04.11	146	1999	4	TNWB	**CL413**	4			year / pencil
	05.11 -	146	1999	4	TNWB	**CL415**	4			year / pencil
2.0 EcoBoost	03.10 - 04.11	149	1999	4	TNWA	**CL413**	4			year /pencil
	05.11 - 06.15	149	1999	4	TNWA	**CL405**	4	CP048	4	year / pencil
2.3	07.07 -	118	2261	4	SEWA	**CL412**	4	CP047	4	pencil
Galaxy										
2.0 EcoBoost	01.15 -	176	1999	4	R9CD/R9CI	**CL413**	4			pencil
Granada (GU)										
2.0	08.79 - 08.85	74	1993	4	NEP	**CL402**	2			twin coil
Grand C-MAX										
1.6 Ti	12.10 -	77	1596	4	IQDB/IQDA	**CL403**	1			
1.6 Ti	12.10 -	92	1596	4	PNDA	**CL403**	1			
1.6 EcoBoost	12.10 -	110	1596	4	JQDA/JQDB	**CL414**	4			pencil
1.6 EcoBoost	12.10 -	134	1596	4	JTDB/JTDA	**CL414**	4			pencil
Ka (RB_)										
1.0 i	07.97 - 09.99	38	999	4	ZH10JRB	**CL401**	1			
1.0 i	09.99 - 11.08	48	999	4		**CL401**	1			
1.3 i	06.98 - 09.98	36	1299	4	JJH/JJD/JJF/JJG/JJL	**CL400**	1			DIN / year
	09.98 - 11.08	36	1299	4	JJH/JJD/JJF/JJG/JJL	**CL401**	1			PIN / year / coil design
	09.98 - 11.08	36	1299	4	JJH/JJD/JJF/JJG/JJL	**CL409**	1			PIN / year / coil design
1.3 i	09.98 - 10.02	37	1299	4	JJB	**CL401**	1			coil design
						CL409	1			coil design
1.3 i	09.96 - 08.98	44	1299	4	J4S/J4K/J4M/J4P/J4N/J4D	**CL400**	1			DIN / year
	09.96 - 11.08	44	1299	4	J4S/J4K/J4M/J4P/J4N/J4D	**CL401**	1			PIN / year / coil design
	09.96 - 11.08	44	1299	4	J4S/J4K/J4M/J4P/J4N/J4D	**CL409**	1			PIN / year / coil design
1.3 i	08.02 - 11.08	51	1299	4	A9B/A9A	**CL401**	1			coil design
						CL409	1			coil design
1.6 i	07.03 - 11.08	70	1599	4	CDC/CDB	**CL401**	1			coil design
						CL409	1			coil design
Ka (RU8)										
1.2	10.08 -	51	1242	4	FP4	**CL309**	1			
Kuga I										
2.5	03.09 -	147	2522	5	HYDB/HYDC	**CL410**	5	CP035	5	pencil
2.5 4x4	03.09 -	147	2522	5	HYDB	**CL410**	5	CP035	5	pencil
Kuga II (DM2)										
1.6 EcoBoost	03.13 -	110	1596	4	JQMA/JQMB	**CL414**	4			pencil
1.6 EcoBoost 4x4	03.13 -	110	1596	4	JQMA/JQMB	**CL414**	4			pencil
1.6 EcoBoost 4x4	03.13 -	134	1596	4	JTMA	**CL414**	4			pencil
Maverick										
2.0 16V	02.01 -	91	1989	4	YF	**CL401**	1			coil design
						CL409	1			coil design

FORD ▶

model	year	kW	cm³	cyl	engine	coil	pcs	boot	pcs	info
FORD										
Mondeo I (GBP)										
1.6 i 16V	07.94 - 08.96	65	1597	4	L1J	**CL400**	1			
1.6 i 16V	02.93 - 08.96	66	1597	4	L1F	**CL400**	1			
1.8 i 16V	07.94 - 08.96	82	1796	4	RKB	**CL400**	1			
1.8 i 16V	02.93 - 08.96	85	1796	4	RKA	**CL400**	1			
1.8 i 16V 4x4	02.93 - 08.96	85	1796	4	RKA	**CL400**	1			
2.0 i 16V	12.94 - 08.96	97	1988	4	NGA	**CL400**	1			
2.0 i 16V	02.93 - 08.96	100	1988	4	NGA	**CL400**	1			
2.0 i 16V 4x4	12.94 - 08.96	97	1988	4	NGA	**CL400**	1			
2.0 i 16V 4x4	04.93 - 08.96	100	1988	4	NGA	**CL400**	1			
2.5 i 24V	07.94 - 08.96	125	2544	6	SEA	**CL408**	1			
Mondeo I Combi (BNP)										
1.6 i 16V	07.94 - 08.96	65	1597	4	L1J	**CL400**	1			
1.6 i 16V	04.93 - 08.96	66	1597	4	L1F	**CL400**	1			
1.8 i 16V	07.94 - 08.96	82	1796	4	RKB	**CL400**	1			
1.8 i 16V	04.93 - 08.96	85	1796	4	RKA	**CL400**	1			
1.8 i 16V 4x4	04.93 - 08.96	85	1796	4	RKA	**CL400**	1			
2.0 i 16V	01.93 - 08.96	97	1988	4	NGA	**CL400**	1			
2.0 i 16V	04.93 - 08.96	100	1988	4	NGA	**CL400**	1			
2.0 i 16V 4x4	12.94 - 08.96	97	1988	4	NGA	**CL400**	1			
2.0 i 16V 4x4	04.93 - 08.96	100	1988	4	NGA	**CL400**	1			
2.5 i 24V	07.94 - 08.96	125	2544	6	SEA	**CL408**	1			
Mondeo I Sedan (GBP)										
1.6 i 16V	07.94 - 08.96	65	1597	4	L1J	**CL400**	1			
1.6 i 16V	02.93 - 08.96	66	1597	4	L1F	**CL400**	1			
1.8 4x4	02.93 - 08.96	85	1796	4	RKA	**CL400**	1			
1.8 i 16V	01.94 - 08.96	82	1796	4	RKB	**CL400**	1			
1.8 i 16V	02.93 - 08.96	85	1796	4	RKA	**CL400**	1			
2.0 i 16V	02.93 - 08.96	100	1988	4	NGA	**CL400**	1			
2.0 i 16V 4x4	12.94 - 08.96	97	1988	4	NGA	**CL400**	1			
2.5 i 24V	07.94 - 08.96	125	2544	6	SEA	**CL408**	1			
Mondeo II (BAP)										
1.6 i	08.96 - 08.98	66	1597	4	L1J	**CL400**	1			DIN / year
	09.98 - 09.00	66	1597	4	L1J	**CL401**	1			PIN / year / coil design
	09.98 - 09.00	66	1597	4	L1J	**CL409**	1			PIN / year / coil design
1.6 i 16V	05.98 - 09.00	70	1597	4	L1N/L1L/L1Q	**CL401**	1			coil design
						CL409	1			coil design
1.8 i	08.96 - 08.98	85	1796	4	RKK/RKJ/RKB/RKF/RKH	**CL400**	1			DIN / year
	09.98 - 09.00	85	1796	4	RKK/RKJ/RKB/RKF/RKH	**CL401**	1			PIN / year / coil design
	09.98 - 09.00	85	1796	4	RKK/RKJ/RKB/RKF/RKH	**CL409**	1			PIN / year / coil design
2.0 i	08.96 - 08.98	96	1988	4	NGA/NGB/NGD/NGC	**CL400**	1			DIN / year
	09.98 - 09.00	96	1988	4	NGA/NGB/NGD/NGC	**CL401**	1			PIN / year / coil design
	09.98 - 09.00	96	1988	4	NGA/NGB/NGD/NGC	**CL409**	1			PIN / year / coil design
2.5 24V	08.96 - 09.00	125	2544	6	SEA	**CL408**	1			
2.5 24V	06.00 - 09.00	125	2495	6	SEB/SEC	**CL408**	1			coil 6xDIN
						CL411	1			coil 6xPIN
2.5 ST 200	05.99 - 09.00	151	2495	6	SGA	**CL408**	1			
Mondeo II Combi (BNP)										
1.6 i	08.96 - 08.98	66	1597	4	L1J	**CL400**	1			DIN / year
	09.98 - 09.00	66	1597	4	L1J	**CL401**	1			PIN / year / coil design
	09.98 - 09.00	66	1597	4	L1J	**CL409**	1			PIN / year / coil design
1.6 i 16V	05.98 - 09.00	70	1597	4	L1N/L1L/L1Q	**CL401**	1			coil design
						CL409	1			coil design
1.8 i	08.96 - 08.98	85	1796	4	RKK/RKJ/RKB/RKF/RKH	**CL400**	1			DIN / year
	09.98 - 09.00	85	1796	4	RKK/RKJ/RKB/RKF/RKH	**CL401**	1			PIN / year / coil design
	09.98 - 09.00	85	1796	4	RKK/RKJ/RKB/RKF/RKH	**CL409**	1			PIN / year / coil design
2.0 i	08.96 - 08.98	96	1988	4	NGA/NGB/NGD/NGC	**CL400**	1			DIN / year
	09.98 - 09.00	96	1988	4	NGA/NGB/NGD/NGC	**CL401**	1			PIN / year / coil design
	09.98 - 09.00	96	1988	4	NGA/NGB/NGD/NGC	**CL409**	1			PIN / year / coil design
2.5 24V	08.96 - 09.00	125	2544	6	SEA	**CL408**	1			
2.5 24V	10.99 - 09.00	125	2495	6	SEB/SEC	**CL408**	1			coil 6xDIN
	10.99 - 09.00	125				**CL411**	1			coil 6xPIN
2.5 ST 200	05.99 - 09.00	151	2495	6	SGA	**CL408**	1			
Mondeo II Sedan (BFP)										
1.6 i	08.96 - 08.98	66	1597	4	L1J	**CL400**	1			DIN / year
	09.98 - 09.00	66	1597	4	L1J	**CL401**	1			PIN / year / coil design
	09.98 - 09.00	66	1597	4	L1J	**CL409**	1			PIN / year / coil design
1.6 i 16V	05.98 - 09.00	70	1597	4	L1N/L1L/L1Q	**CL401**	1			coil design
						CL409	1			coil design
1.8 i	08.96 - 08.98	85	1796	4	RKK/RKJ/RKB/RKF/RKH	**CL400**	1			DIN / year
	09.98 - 09.00	85	1796	4	RKK/RKJ/RKB/RKF/RKH	**CL401**	1			PIN / year / coil design
	09.98 - 09.00	85	1796	4	RKK/RKJ/RKB/RKF/RKH	**CL409**	1			PIN / year / coil design

FORD Mondeo II Sedan (BFP) ▶

model	year	kW	cm³	cyl	engine	coil	pcs	boot	pcs	info
FORD										
Mondeo II Sedan (BFP)										
2.0 i	08.96 - 08.98	96	1988	4	NGA/NGB/NGD/NGC	**CL400**	1			DIN / year
	09.98 - 09.00	96	1988	4	NGA/NGB/NGD/NGC	**CL401**	1			PIN / year / coil design
	09.98 - 09.00	96	1988	4	NGA/NGB/NGD/NGC	**CL409**	1			PIN / year / coil design
2.5 24V	08.96 - 09.00	125	2544	6	SEA	**CL408**	1			
2.5 24V	06.00 - 09.00	125	2495	6	SEB/LCBD/SEC	**CL408**	1			coil 6xDIN
						CL411	1			coil 6xPIN
2.5 ST 200	05.99 - 09.00	151	2495	6	SGA	**CL408**	1			
Mondeo III (B5Y)										
1.8 16V	10.00 - 02.05	81	1798	4	CGBB/CGBA	**CL409**	1			year
	03.05 - 03.07	81	1798	4	CGBB/CGBA	**CL406**	1			year
1.8 16V	10.00 - 02.05	92	1798	4	CHBA/CHBB	**CL409**	1			year
	03.05 - 03.07	92	1798	4	CHBA/CHBB	**CL406**	1			year
1.8 SCi	06.03 - 03.07	96	1798	4	CFBA	**CL407**	4			pencil
2.0 16V	10.00 - 02.05	107	1999	4	CJBA/CJBB	**CL409**	1			year
	03.05 - 03.07	107	1999	4	CJBA/CJBB	**CL406**	1			year
2.5 V6 24V	10.00 - 03.07	125	2495	6	LCBD	**CL411**	1			
3.0 V6 24V	09.04 - 03.07	150	2967	6	REBA	**CL411**	1			
3.0 ST220	04.02 - 03.07	166	2967	6	MEBA	**CL411**	1			
Mondeo III Combi (BWY)										
1.8 16V	10.00 - 02.05	81	1798	4	CGBB/CGBA	**CL409**	1			year
	03.05 - 03.07	81	1798	4	CGBB/CGBA	**CL406**	1			year
1.8 16V	10.00 - 02.05	92	1798	4	CHBA/CHBB	**CL409**	1			year
	03.05 - 03.07	92	1798	4	CHBA/CHBB	**CL406**	1			year
1.8 SCi	06.03 - 03.07	96	1798	4	CFBA	**CL407**	4			pencil
2.0 16V	10.00 - 02.05	107	1999	4	CJBA/CJBB	**CL409**	1			year
	03.05 - 03.07	107	1999	4	CJBA/CJBB	**CL406**	1			year
2.5 V6 24V	10.00 - 03.07	125	2495	6	LCBD	**CL411**	1			
3.0 V6 24V	09.04 - 03.07	150	2967	6	REBA	**CL411**	1			
3.0 ST220	04.02 - 03.07	166	2967	6	MEBA	**CL411**	1			
Mondeo III Sedan (B4Y)										
1.8 16V	10.00 - 02.05	81	1798	4	CGBB/CGBA	**CL409**	1			year
	03.05 - 03.07	81	1798	4	CGBB/CGBA	**CL406**	1			year
1.8 16V	10.00 - 02.05	92	1798	4	CHBA/CHBB	**CL409**	1			year
	03.05 - 03.07	92	1798	4	CHBA/CHBB	**CL406**	1			year
1.8 SCi	06.03 - 03.07	96	1798	4	CFBA	**CL407**	4			pencil
2.0 16V	10.00 - 02.05	107	1999	4	CJBA/CJBB	**CL409**	1			year
	03.05 - 03.07	107	1999	4	CJBA/CJBB	**CL406**	1			year
2.5 V6 24V	10.00 - 03.07	125	2495	6	LCBD	**CL411**	1			
3.0 V6 24V	09.04 - 03.07	150	2967	6	REBA	**CL411**	1			
3.0 ST220	04.02 - 03.07	166	2967	6	MEBA	**CL411**	1			
Mondeo IV (BA7)										
1.6 EcoBoost	02.11 - 09.14	118	1596	4	JTBB	**CL414**	4			pencil
1.6 Ti	03.07 - 09.14	81	1596	4	RHBA	**CL403**	1			
1.6 Ti	07.10 - 09.14	88	1596	4	KGBA	**CL403**	1			
1.6 Ti	03.07 - 09.14	92	1596	4	PNBA	**CL403**	1			
2.0	03.07 - 09.14	107	1999	4	AOBC/AOBA/TBBA	**CL405**	4	CP048	4	pencil
2.0 EcoBoost	07.10 - 04.11	176	1999	4	TPBA	**CL413**	4			year / pencil
	05.11 - 09.14	176	1999	4	TPBA	**CL415**	4			year / pencil
2.0 Flexifuel	03.09 - 09.14	107	1999	4	TBBB/TBBA	**CL405**	4	CP048	4	pencil
2.0 LPG	07.09 - 09.14	107	1999	4	TBBA	**CL405**	4	CP048	4	pencil
2.0 SCTi	03.10 - 04.11	149	1976	4	TNBA	**CL413**	4			year / pencil
	05.11 - 09.14	149	1976	4	TNBA	**CL405**	4	CP048	4	year / pencil
2.3	07.07 - 09.14	118	2261	4	SEBA	**CL412**	4	CP047	4	pencil
2.5	03.07 - 09.14	162	2521	5	HUBA	**CL410**	5	CP035	5	pencil
Mondeo IV Sedan (BA7)										
1.6 Ti	03.07 - 09.14	92	1596	4	PNBA	**CL403**	1			
2.0	03.07 - 09.14	107	1999	4	AOBC/AOBA/TBBA	**CL405**	4	CP048	4	pencil
2.0 Flexifuel	03.09 - 09.14	107	1999	4	TBBB/TBBA	**CL405**	4	CP048	4	pencil
2.0 LPG	07.09 - 09.14	107	1999	4	TBBA	**CL405**	4	CP048	4	pencil
2.3	07.07 - 09.14	118	2261	4	SEBA	**CL412**	4	CP047	4	pencil
2.5	03.07 - 09.14	162	2521	5	HUBA	**CL410**	5	CP035	5	pencil
Mondeo IV Turnier (BA7)										
1.6 EcoBoost	02.11 - 09.14	118	1596	4	JTBA	**CL414**	4			pencil
1.6 Ti	03.07 - 12.12	81	1596	4	RHBA	**CL403**	1			
1.6 Ti	07.10 - 09.14	88	1596	4	KGBA	**CL403**	1			
1.6 Ti	03.07 - 12.10	92	1596	4	PNBA	**CL403**	1			
2.0	03.07 - 09.14	107	1999	4	AOBC/AOBA/TBBA	**CL405**	4	CP048	4	pencil
2.0 EcoBoost	07.10 - 04.11	176	1999	4	TPBA	**CL413**	4			year / pencil
	05.11 - 09.14	176	1999	4	TPBA	**CL415**	4			year / pencil
2.0 Flexifuel	03.09 - 09.14	107	1999	4	TBBB/TBBA	**CL405**	4	CP048	4	pencil
2.0 LPG	07.09 - 09.14	107	1999	4	TBBA	**CL405**	4	CP048	4	pencil

FORD Mondeo IV Turnier (BA7) ▶

model	year	kW	cm³	cyl	engine	coil	pcs	boot	pcs	info
FORD										
Mondeo IV Turnier (BA7)										
2.0 SCTi	03.10 - 04.11	149	1976	4	TNBA	**CL413**	4			year / pencil
	05.11 - 09.14	149	1976	4	TNBA	**CL405**	4	CP048	4	year / pencil
2.3	07.07 - 09.14	118	2261	4	SEBA	**CL412**	4	CP047	4	pencil
2.5	03.07 - 12.12	162	2521	5	HUBA	**CL410**	5	CP035	5	pencil
Mondeo V CC										
1.0 EcoBoost	02.15 -	92	999	3	M1CB/M1CA	**CL416**	3			pencil
Mondeo V Turnier										
1.0 EcoBoost	02.15 -	92	999	3	M1CB/M1CA	**CL416**	3			pencil
Orion II (AFF)										
1.6	12.85 - 07.90	66	1597	4	LUC	**CL400**	1			
1.6 i	08.89 - 07.90	75	1597	4	LJB	**CL400**	1			
Orion III (GAL)										
1.3	07.90 - 12.93	44	1299	4	J6A/J4B	**CL400**	1			
1.4	07.90 - 12.93	52	1391	4	F6F/F6G	**CL400**	1			
1.4	07.90 - 12.93	54	1392	4	FUH	**CL400**	1			
1.6	07.90 - 12.92	66	1598	4	LUJ/LUK	**CL400**	1			
1.6 i	07.90 - 09.92	77	1598	4	LJF	**CL400**	1			
1.6 i 16V	07.92 - 12.93	66	1597	4	L1E/L1K	**CL400**	1			
1.8 i 16V	02.92 - 12.93	77	1796	4	RDA	**CL400**	1			
1.8 i 16V	01.92 - 12.93	96	1796	4	RQB	**CL400**	1			
Puma (EC_)										
1.4 16V	11.97 - 04.98	66	1388	4	FHD	**CL400**	1			DIN / year
	05.98 - 10.00	66	1388	4	FHD/FHF	**CL401**	1			PIN / year / coil design
	05.98 - 10.00	66	1388	4	FHD/FHF	**CL409**	1			PIN / year / coil design
1.6 16V	08.00 - 06.02	76	1596	4	L1W	**CL401**	1			coil design
						CL409	1			coil design
1.7 16V	03.97 - 04.98	92	1679	4	MHB/MHA	**CL400**	1			DIN / year
	05.98 - 06.02	92	1679	4	MHB/MHA	**CL401**	1			PIN / year
1.7 ST 160	06.99 - 04.00	118	1679	4		**CL400**	1			DIN / year
	05.00 - 06.02	118	1679	4		**CL401**	1			PIN / year
Scorpio I (GAE, GGE)										
2.0 i	04.85 - 02.92	85	1993	4	NRI/NRA	**CL402**	2			twin coil
2.9 i 24V	04.91 - 09.94	143	2933	6	BOA	**CL408**	1			
Scorpio I Combi (GGE)										
2.9 24V	08.93 - 09.94	143	2933	6	BOA	**CL408**	1			
Scorpio I Sedan (GGE)										
2.9 i 24V	04.91 - 09.94	143	2933	6	BOA	**CL408**	1			
Scorpio II (GFR, GGR)										
2.0 i	10.94 - 08.98	85	1998	4	NSD	**CL402**	2			twin coil
2.0 i 16V	10.94 - 08.98	100	1998	4	N3A	**CL404**	2			semidirect / pencil
2.3 i 16V	06.96 - 08.98	108	2295	4	Y5A	**CL404**	2			semidirect / pencil
2.9 i 24V	10.94 - 08.98	152	2933	6	BOB	**CL408**	1			
Scorpio II Combi (GNR, GGR)										
2.0 i	10.94 - 08.98	85	1998	4	NSD	**CL402**	2			twin coil
2.0 i 16V	10.94 - 08.98	100	1998	4	N3A	**CL404**	2			semidirect / pencil
2.3 i 16V	06.96 - 08.98	108	2295	4	Y5A	**CL404**	2			semidirect / pencil
2.9 i 24V	10.94 - 08.98	152	2933	6	BOB	**CL408**	1			
Sierra (GBG, GB4)										
1.8	05.88 - 02.93	64	1769	4	R2C/R6A	**CL400**	1			
Sierra CC (GBC, GBG)										
1.8	05.88 - 02.93	64	1769	4	R2C/R6A	**CL400**	1			
Sierra Combi (BNG)										
1.8	05.88 - 02.93	64	1769	4	R2C/R6A	**CL400**	1			
S-MAX (WA6)										
1.6 EcoBoost	02.11 -	118	1596	4	JTWA/JTWB	**CL414**	4			pencil
2.0	05.06 -	107	1999	4	AOWB/AOWA	**CL405**	4	CP048	4	pencil
2.0 EcoBoost	07.10 - 04.11	146	1999	4	TNWB	**CL413**	4			year / pencil
	05.11 -	146	1999	4	TNWB	**CL415**	4			year / pencil
2.0 EcoBoost	03.10 - 04.11	149	1999	4	TNWA	**CL413**	4			year / pencil
	05.11 -	149	1999	4	TNWA	**CL405**	4	CP048	4	year / pencil
2.0 EcoBoost	07.10 - 04.11	176	1999	4	TPWA	**CL413**	4			year / pencil
	05.11 -	176	1999	4	TPWA	**CL415**	4			year / pencil
2.0 Flexifuel	05.06 -	107	1999	4	TBWA/TBWB	**CL405**	4	CP048	4	pencil
2.3	07.07 -	118	2261	4	SEWA	**CL412**	4	CP047	4	pencil
2.5 ST	05.06 -	162	2521	5	HUWA	**CL410**	5	CP035	5	pencil
S-MAX										
2.0 EcoBoost	02.15 -	176	1999	4	R9CD/R9CI	**CL413**	4			pencil
Street Ka (RL2)										
1.6	05.03 - 07.05	70	1599	4	CDRA/CDRB	**CL401**	1			coil design
						CL409	1			coil design

model	year	kW	cm³	cyl	engine	coil	pcs	boot	pcs	info
FORD										
Tourneo Connect										
1.8 16V	06.02 - 12.13	85	1796	4	EYPC/EYPA/EYPD	**CL401**	1			
Grand Tourneo Connect										
1.0 EcoBoost	11.13 -	74	998	3	M2GA/M2GB	**CL416**	3			pencil
1.6 EcoBoost	11.13 -	110	1596	4	JQGA	**CL414**	4			pencil
Tourneo Courier Combi										
1.0 EcoBoost	02.14 -	74	998	3	SFCD/SFCC/SFCA/SFCB	**CL416**	3			pencil
Transit Bus (E_ _)										
2.0	09.95 - 03.00	84	1998	4	NSF/NSG	**CL402**	2			twin coil
Transit Bus (FD, FB, FS, FZ, FC_ _)										
2.3 16V [RWD]	08.00 - 05.06	107	2295	4	E5FC/E5FA	**CL404**	2			semidirect / pencil
Transit Connect (P65_, P70_, P80_)										
1.8 16V	06.02 - 12.13	85	1796	4	EYPC/EYPA/EYPD	**CL401**	1			
Transit Connect Van										
1.0 EcoBoost	02.13 -	74	998	3	M2GA	**CL416**	3			pencil
Transit Courier Combi										
1.0 EcoBoost	02.14 -	74	998	3	SFCD/SFCC/SFCA/SFCB	**CL416**	3			pencil
Transit Courier Van										
1.0 EcoBoost	02.14 -	74	998	3	SFCD/SFCC/SFCA/SFCB	**CL416**	3			pencil
Transit Flatbed (E_ _)										
2.0	08.94 - 03.00	84	1998	4	NSF/NSG	**CL402**	2			twin coil
Transit Flatbed (FM_ _, FN_ _)										
2.3 16V	04.01 - 05.06	107	2295	4	E5FC/E5FA	**CL404**	2			semidirect / pencil
Transit Flatbed										
2.3 16V [RWD]	04.06 - 08.14	107	2261	4	GZFA/GZFC/GZFB	**CL405**	4	CP048	4	pencil
2.3 16V CNG [RWD]	04.06 - 08.14	100	2261	4	GZFA	**CL405**	4	CP048	4	pencil
2.3 16V LPG [RWD]	04.06 - 08.14	107	2261	4	GZFA	**CL405**	4	CP048	4	pencil
Transit Van (E_ _)										
2.0	06.94 - 03.00	84	1998	4	NSF/NSG	**CL402**	2			twin coil
Transit Van (FA_ _)										
2.3 16V [RWD]	04.01 - 05.06	107	2295	4	E5FC/E5FA	**CL404**	2			semidirect / pencil
Transit Van										
2.3 16V [RWD]	04.06 - 08.14	107	2261	4	GZFA/GZFC/GZFB	**CL405**	4	CP048	4	pencil
2.3 16V CNG [RWD]	04.06 - 08.14	100	2261	4	GZFA	**CL405**	4	CP048	4	pencil
2.3 16V LPG [RWD]	04.06 - 08.14	107	2261	4	GZFA	**CL405**	4	CP048	4	pencil
Windstar (A3)										
3.0 V6	03.95 - 02.99	109	2986	6		**CL408**	1			
FSO										
Polonez III										
1.4 i 16V	09.92 - 03.02	76	1398	4	Rover K16 DOHC	**CL302**	1			
GAZ										
Gazelle Bus										
2.3	10.93 - 08.01	96	2287	4	ZMZ-4062.10	**CL801**	1			
Gazelle Flatbed										
2.4	10.93 - 08.01	66	2445	4	ZMZ-402.10	**CL801**	1			
Gazelle Van										
2.4	10.93 - 08.01	66	2445	4	ZMZ-402.10	**CL801**	1			
GEELY										
BL Coupe										
1.3	09.05 -	63	1342	4	MR479Q	**CL803**	1			
1.5	09.05 -	69	1498	4	MR479QA	**CL803**	1			
CK Sedan										
1.6	09.05 -	79	1587	4	MR481QA	**CL803**	1			
HONDA										
Accord IV (CB)										
2.0 16V	01.90 - 03.93	81	1997	4	F20A3/F20A2	**CL501**	1			
2.0 i 16V	01.90 - 03.93	98	1997	4	F20A4/F20A8	**CL501**	1			
2.2 i 16V	01.90 - 03.93	110	2156	4	F22A3	**CL501**	1			
2.2 i 16V Automatic	01.90 - 03.93	108	2156	4	F22A3	**CL501**	1			
Accord IV Aerodeck (CB)										
2.0 i 16V	03.93 - 12.93	98	1997	4	F20Z3	**CL501**	1			
2.2 i 16V	01.91 - 12.93	108	2156	4	F22A8	**CL501**	1			
2.2 i 16V	01.91 - 12.93	110	2156	4	F22A7	**CL501**	1			
Accord IV Coupe (CB, CC)										
2.0 i 16V	01.92 - 09.93	98	1997	4	F20A7	**CL501**	1			
Accord V (CC, CD)										
2.0 i	03.93 - 01.96	85	1997	4	F20Z2	**CL501**	1			
2.0 i S	03.93 - 01.96	96	1997	4	F20Z1	**CL501**	1			
2.3 i SR	03.93 - 01.96	116	2259	4	H23A3	**CL501**	1			
Accord V (CE, CF)										
1.9 i	02.96 - 10.98	85	1850	4	F18A3	**CL569**	1			
2.0 i LS	02.96 - 10.98	96	1997	4	F20Z1	**CL501**	1			

HONDA Accord V (CE, CF) ▶

model	year	kW	cm³	cyl	engine	coil	pcs	boot	pcs	info
HONDA										
Accord V (CE, CF)										
2.2 i VTEC	02.96 - 10.98	110	2156	4	F22Z2	**CL569**	1			
Accord V Aerodeck (CE)										
2.0 i LS 16V	09.93 - 02.98	100	1997	4	F20B3	**CL501**	1			
2.2 i ES	09.93 - 02.98	110	2156	4	F22B5	**CL501**	1			
Accord V Coupe (CD)										
2.0	09.93 - 12.97	100	1997	4	F20B3	**CL501**	1			
2.2 i ES	09.93 - 02.98	110	2156	4	F22B5	**CL501**	1			
Accord VI (CG, CK)										
1.6 i	10.98 - 12.02	85	1590	4	D16B6	**CL522**	4			pencil
1.8 i	10.98 - 12.02	100	1850	4	F18B2	**CL569**	1			
2.0 i	10.98 - 01.01	108	1997	4	F20B6	**CL569**	1			
2.2 Type-R	02.99 - 12.02	156	2157	4	H22A7	**CL501**	1			
2.3	01.01 - 06.03	113	2254	4	F23Z5/F23A1	**CL569**	1			
Accord VI Coupe (CG)										
2.0 i 16V	02.98 - 06.03	108	1997	4	F20B7/F20B5	**CL569**	1			
3.0 V6 24V	02.98 - 06.03	147	2997	6	J30A1	**CL550**	6			pencil
Accord VI Hatchback (CH)										
1.8 i	12.99 - 12.02	100	1850	4	F18B2	**CL569**	1			
2.0	12.99 - 12.02	108	1997	4	F20B6	**CL569**	1			
2.3	11.00 - 12.02	113	2254	4	F23Z5	**CL569**	1			
Accord VII (CL)										
2.0	02.03 - 05.08	114	1998	4	K20A6	**CL556**	4			pencil
2.0 Allrad	02.03 - 05.08	114	1998	4	K20A6	**CL556**	4			pencil
2.4	02.03 - 05.08	140	2354	4	K24A3/K24A	**CL556**	4			pencil
Accord VII Tourer (CM)										
2.0	04.03 - 05.08	114	1998	4	K20A6	**CL556**	4			pencil
2.4	04.03 - 05.08	140	2354	4	K24A	**CL556**	4			pencil
Accord VIII (CU)										
2.0 i	07.08 - 06.15	115	1997	4	R20A3	**CL596**	4			pencil
Accord VIII Combi										
2.0 i	07.08 -	115	1997	4	R20A3	**CL596**	4			pencil
Civic II Shuttle (EE)										
1.5 i 16V	01.88 - 11.91	69	1493	4	D15B2	**CL500**	1			
1.6 i 16V 4WD	01.88 - 12.89	80	1590	4	D16A6	**CL500**	1			1st coil type
						CL560	1			2nd coil type
1.6 i 16V 4WD	01.88 - 02.95	81	1590	4	D16A6	**CL500**	1			
Civic III Hatchback (AL, AJ, AG, AH)										
1.5 GL	10.83 - 10.87	63	1488	4	EW2	**CL500**	1			
Civic III Sedan (AM, AK, AU)										
1.5 GL	10.83 - 10.87	63	1488	4	EW2	**CL500**	1			
Civic IV Hatchback (EC, ED, EE)										
1.5 i 16V	10.88 - 09.91	66	1493	4	D15B2	**CL560**	1			
1.5 i 16V	10.88 - 09.91	69	1493	4	D15B2	**CL560**	1			
1.6 i 16V	10.87 - 09.91	80	1590	4	D16A6	**CL500**	1			1st coil type
						CL560	1			2nd coil type
1.6 i 16V	10.87 - 09.91	81	1590	4	D16Z2	**CL500**	1			1st coil type
						CL560	1			2nd coil type
1.6 i 16V Vtec	10.89 - 09.91	110	1595	4	B16A1	**CL500**	1			1st coil type
						CL560	1			2nd coil type
Civic IV Sedan (ED)										
1.5 i 16V	10.87 - 09.91	66	1493	4	D15B2	**CL500**	1			
1.5 i 16V	10.87 - 09.91	69	1493	4	D15B2	**CL500**	1			
1.6 i 16V	11.87 - 09.91	80	1590	4	D16A6	**CL500**	1			1st coil type
						CL560	1			2nd coil type
1.6 i 16V	10.87 - 09.91	81	1590	4	D16Z2	**CL500**	1			1st coil type
						CL560	1			2nd coil type
1.6 i 16V	09.87 - 09.91	96	1590	4	D16A7	**CL500**	1			
1.6 i 16V 4x4	10.89 - 09.91	80	1590	4	D16A6	**CL500**	1			1st coil type
						CL560	1			2nd coil type
Civic V Coupe (EJ)										
1.5 i LSi	08.93 - 11.95	74	1493	4	D15B7	**CL501**	1			
1.6 i	01.94 - 11.95	77	1590	4	D16Y7	**CL501**	1			
1.6 i Vtec	01.94 - 03.96	92	1590	4	D16Y6/D16Z9	**CL501**	1			
1.6 i Vtec	01.94 - 11.95	118	1595	4	B16A2	**CL501**	1			
Civic V Hatchback (EG)										
1.5 i 16V	10.91 - 11.95	66	1493	4	D15B2/D15Z2	**CL501**	1			
1.5 i 16V	10.91 - 11.95	69	1493	4	D15Z1 /D15B2	**CL501**	1			
1.6 16V Vtec	10.91 - 11.95	92	1590	4	D16Z6	**CL501**	1			
1.6 VTi 16V	10.91 - 11.95	118	1595	4	B16A2	**CL501**	1			
Civic V Sedan (EG, EH)										
1.5 i 16V	10.91 - 11.95	69	1493	4	D15B2	**CL501**	1			

HONDA Civic V Sedan (EG, EH) ▶

model	year	kW	cm³	cyl	engine	coil	pcs	boot	pcs	info
HONDA										
Civic V Sedan (EG, EH)										
1.6 16V Vtec	10.91 - 11.95	92	1590	4	D16Z6/D16Z7	**CL501**	1			
1.6 VTi 16V	10.91 - 11.95	118	1595	4	B16A2	**CL560**	1			
Civic VI Aerodeck (MB, MC)										
1.4 16V	04.98 - 02.01	55	1396	4	D14A7	**CL501**	1			
1.4 16V	04.98 - 02.01	66	1396	4	D14A8	**CL501**	1			
1.5 16V	04.98 - 02.01	84	1493	4	D15Z8	**CL569**	1			
1.6 16V	04.98 - 02.01	85	1590	4	D16B2	**CL501**	1			
1.8 16V	04.98 - 02.01	124	1797	4	B18C4	**CL501**	1			
Civic VI Coupe (EJ, EM1)										
1.6 i	03.96 - 03.00	77	1590	4	D16Y7	**CL501**	1			
1.6 i Vtec	03.96 - 03.00	92	1590	4	D16Y8	**CL501**	1			
1.6 i Vtec	04.99 - 12.00	118	1595	4	B16A2	**CL501**	1			
Civic VI Fastback (MA, MB)										
1.4 i	09.95 - 02.01	55	1396	4	D14A5/D14A7/D14Z3	**CL569**	1			
1.4 i	09.94 - 02.01	66	1396	4	D14A8/D14Z4/D14A6/D14A2	**CL569**	1			
1.5 16V	01.97 - 02.01	84	1493	4	D15Z8	**CL501**	1			
1.5 i Vtec-E (MA9)	09.94 - 01.97	66	1493	4	D15Z3	**CL501**	1			
1.6 16V	01.97 - 02.01	85	1590	4	D16B2	**CL501**	1			
1.6 i	09.94 - 01.97	83	1590	4	D16Y3	**CL501**	1			
1.6 i Vtec	09.94 - 01.97	93	1590	4	D16Y2	**CL501**	1			
1.6 VTi	01.97 - 02.01	118	1595	4	B16A2	**CL501**	1			
1.8 16	01.97 - 02.01	124	1797	4	B18C4	**CL501**	1			
Civic VI Hatchback (EJ, EK)										
1.4 i	11.95 - 02.01	55	1396	4	D14A3	**CL501**	1			
1.4 i S	11.95 - 02.01	66	1396	4	D14A4/D14Z4/D14Z2	**CL501**	1			
1.5 i	11.95 - 02.01	84	1493	4	D15Z6	**CL501**	1			
1.6 i	11.95 - 02.01	84	1590	4	D16Y5	**CL501**	1			
1.6 VTi	11.95 - 02.01	118	1595	4	B16A2	**CL501**	1			
Civic VI Sedan (EJ, EK)										
1.4	11.95 - 10.98	55	1396	4	D14A4	**CL501**	1			
1.4 i	11.95 - 02.01	66	1396	4	D14A4/D14Z4/D14Z2	**CL501**	1			
1.5 i	11.95 - 02.01	84	1493	4	D15Z6	**CL501**	1			
1.6 i Vtec	11.95 - 02.01	92	1590	4	D16Y6/D16Y8	**CL501**	1			
1.6 VTi	11.95 - 02.01	118	1595	4	B16A2	**CL501**	1			
Civic VII Coupe (EM2)										
1.6 i	02.01 - 12.05	81	1590	4	D16V1	**CL583**	4			pencil
1.7 i	05.01 - 12.05	88	1668	4	D17A8	**CL550**	4			pencil
1.7 i VTEC	05.01 - 12.05	92	1668	4	D17A5/D17A9	**CL550**	4			pencil
Civic VII Hatchback (EU, EP, EV)										
1.4 i	02.01 - 09.05	55	1396	4	D14Z6	**CL583**	4			pencil
1.4 iS	02.01 - 09.05	66	1396	4	D14Z5/D14Z6	**CL583**	4			pencil
1.6 i	02.01 - 09.05	81	1590	4	D16V1	**CL583**	4			pencil
2.0 i Sport	09.01 - 09.05	118	1998	4	K20A3	**CL556**	4			pencil
2.0 Type-R	09.01 - 09.05	147	1998	4	K20A2	**CL556**	4			pencil
Civic VII Sedan (ES)										
1.3 IMA	01.04 - 09.05	61	1339	4	LDA1	**CL585**	2			pencil / mounting - front side
						CL586	2			pencil / mounting - back side
1.4	12.00 - 09.05	66	1396	4	D14Z5	**CL583**	4			pencil
1.6	02.01 - 09.05	81	1590	4	D16V1	**CL583**	4			pencil
1.7	02.01 - 09.05	85	1668	4	D17A6	**CL550**	4			pencil
1.8	02.01 - 09.05	103	1799	4	R18A1	**CL596**	4			pencil
Civic VIII Hatchback (FN, FK)										
1.4	09.05 -	61	1339	4	L13A7	**CL585**	2			pencil / mounting - front side
						CL586	2			pencil / mounting - back side
1.4	10.08 -	73	1339	4	L13Z1	**CL585**	2			pencil / mounting - front side
						CL586	2			pencil / mounting - back side
1.8	09.05 -	103	1799	4	R18A2	**CL596**	4			pencil
2.0 Type R	09.06 -	148	1998	4	K20Z4	**CL556**	4			pencil
Civic VIII Sedan (FD, FA)										
1.3 Hybrid	01.06 -	70	1339	4	LDA2	**CL585**	2			pencil / mounting - front side
						CL586	2			pencil / mounting - back side
1.8	09.05 - 02.12	103	1799	4	R18A1	**CL596**	4			pencil
1.8	02.06 -	103	1799	4	R18A2	**CL596**	4			pencil
Concerto (HW)										
1.5 i 16V	08.89 - 03.95	66	1493	4	D15B2	**CL500**	1			1st coil type
						CL560	1			2nd coil type
1.6 16V	08.89 - 03.95	78	1590	4	D16Z2	**CL500**	1			
1.6 i 16V	08.89 - 03.95	82	1590	4	D16Z2	**CL500**	1			
1.6 i 16V	08.89 - 03.95	90	1590	4	D16A8	**CL500**	1			
Concerto Sedan (HWW)										
1.5 i 16V	08.89 - 05.95	66	1493	4	D15B2	**CL500**	1			

HONDA Concerto Sedan (HWW) ▶

model	year	kW	cm³	cyl	engine	coil	pcs	boot	pcs	info
HONDA										
Concerto Sedan (HWW)										
1.6 16V	08.89 - 03.95	78	1590	4	D16Z2	**CL500**	1			
1.6 i 16V	08.89 - 03.95	82	1590	4	D16Z2	**CL500**	1			
1.6 i 16V	08.89 - 03.95	90	1590	4	D16A8	**CL500**	1			
CR-V I (RD)										
2.0 16V	01.99 - 02.02	108	1973	4	B20Z1	**CL501**	1			
2.0 16V 4WD	10.95 - 01.99	94	1973	4	B20B	**CL501**	1			
CR-V II (RD_)										
2.0	09.01 - 09.06	110	1998	4	K20A4	**CL556**	4			pencil
CR-V III (RE)										
2.0 i 4WD	01.07 -	110	1997	4	R20A2	**CL556**	4			pencil
CRX II (ED, EE)										
1.6 i 16V	10.87 - 02.92	91	1590	4	D16Z5	**CL500**	1			
1.6 i 16V	10.87 - 12.89	96	1590	4	D16A8/D16A9	**CL500**	1			
1.6 i 16V Vtec	10.89 - 02.92	110	1595	4	B16A1	**CL500**	1			
CRX III (EH, EG)										
1.6 ESi	03.92 - 12.98	92	1590	4	D16Y8/D16Z6	**CL501**	1			
1.6 i VTi	03.92 - 12.98	118	1595	4	B16A2	**CL501**	1			
FR-V (BE)										
1.7	08.04 -	92	1668	4	D17A2	**CL550**	4			pencil
1.8	01.07 -	103	1799	4	R18A1	**CL596**	4			pencil
2.0	02.05 -	110	1998	4	K20A9	**CL556**	4			pencil
HR-V (GH)										
1.6 16V	03.99 -	77	1590	4	D16W1	**CL501**	1			
1.6 16V 4WD	03.99 -	77	1590	4	D16W1	**CL501**	1			
1.6 16V 4WD	10.99 -	91	1590	4	D16W5	**CL501**	1			
Integra Coupe (DC2, DC4)										
1.8 Type-R	11.97 - 10.01	140	1797	4	B18C6	**CL501**	1			
Jazz II (GD)										
1.2	03.02 - 07.08	57	1243	4	L12A1	**CL585**	2			pencil / mounting - front side
						CL586	2			pencil / mounting - back side
1.3	03.02 - 07.08	61	1339	4	L13A1	**CL585**	2			pencil / mounting - front side
						CL586	2			pencil / mounting - back side
Jazz III (GE)										
1.2	07.08 -	66	1198	4	L12B1	**CL585**	2			pencil / mounting - front side
						CL586	2			pencil / mounting - back side
1.3 i	07.08 -	73	1339	4	L13Z1	**CL585**	2			pencil / mounting - front side
						CL586	2			pencil / mounting - back side
Legend I (HS, KA)										
2.5 i	01.86 - 12.87	110	2494	6	C25A1	**CL716**	1			
2.5 i	02.87 - 06.88	127	2494	6	C25A2	**CL716**	1			
2.7 i 24V	01.88 - 12.90	124	2675	6	C27A1	**CL716**	1			
Legend I Coupe (KA3)										
2.7 i 24V	10.87 - 12.90	124	2675	6	C27A1	**CL716**	1			
Legend IV (KB_)										
3.5 V6 4WD	05.06 -	217	3471	6	J35A8/C35A8	**CL550**	6			pencil
Logo (GA3)										
1.3	03.99 - 03.02	48	1343	4	D13B7	**CL501**	1			
Prelude IV (BB)										
2.0 i 16V	02.92 - 09.96	98	1997	4	F20A4	**CL501**	1			
2.2 i 16V Vtec	02.93 - 09.96	136	2157	4	H22A2	**CL501**	1			
2.3 i 16V	02.92 - 09.96	118	2259	4	H23A2	**CL501**	1			
Prelude V (BB)										
2.0 16V	10.96 - 10.00	98	1997	4	F20A4	**CL501**	1			
2.2 16V	10.96 - 10.00	136	2157	4	H22A2 /H22A5	**CL501**	1			
2.2 16V	10.96 - 10.00	147	2157	4	H22A5	**CL501**	1			
Shuttle (RA)										
2.2 16V	10.94 - 02.98	110	2156	4	F22B8	**CL501**	1			
2.3 16V	10.97 - 06.04	110	2254	4	F23A7	**CL569**	1			
Stream (RN)										
1.7 16V	05.01 -	92	1668	4	D17A2	**CL550**	4			pencil
2.0 16V	05.01 -	115	1998	4	K20A1	**CL556**	4			pencil
Stream										
1.8 Vtec	10.05 -	103	1798	4	R18A2	**CL596**	4			pencil
HYUNDAI										
Accent I (X-3)										
1.3	10.94 - 01.00	44	1341	4	G4EH	**CL502**	1			
1.3	10.94 - 01.00	55	1341	4	G4EH	**CL502**	1			
1.3 i 12V	10.94 - 01.00	62	1341	4	G4EH	**CL502**	1			
1.5 i 12V	10.94 - 01.00	65	1495	4	G4EK	**CL502**	1			
Accent Sedan (X-3)										
1.3	10.94 - 01.00	44	1341	4	G4EH	**CL502**	1			

HYUNDAI Accent Sedan (X-3) ▶

model	year	kW	cm³	cyl	engine	coil	pcs	boot	pcs	info
HYUNDAI										
Accent Sedan (X-3)										
1.3	10.94 - 01.00	55	1341	4	G4EH	**CL502**	1			
1.3 i 12V	10.94 - 01.00	62	1341	4	G4EH	**CL502**	1			
1.5 i 12V	10.94 - 01.00	65	1495	4	G4EK	**CL502**	1			
Accent II (LC)										
1.3	01.00 - 11.05	55	1341	4	G4EA	**CL524**	1			
1.3	01.00 - 11.05	61	1341	4	G4EA	**CL524**	1			
1.3	08.02 - 11.05	62	1341	4	G4EH	**CL524**	1			
1.3	01.00 - 11.05	63	1341	4	G4EA	**CL524**	1			
1.5	01.00 - 11.05	66	1495	4	G4EB	**CL502**	1			
1.5	09.00 - 11.05	75	1495	4	G4EC-G	**CL502**	1			
1.6	12.02 - 11.05	77	1599	4	G4ED-G	**CL546**	1			coil 4xDIN
						CL595	4	CP054	4	pencil
Accent II Sedan (LC)										
1.3	01.00 - 11.05	55	1341	4	G4EA	**CL524**	1			
1.3	01.00 - 11.05	63	1341	4	G4EA	**CL524**	1			
1.5	01.00 - 11.05	66	1495	4	G4EB	**CL502**	1			
1.6	12.02 - 11.05	77	1599	4	G4ED-G	**CL546**	1			coil 4xDIN
						CL595	4	CP054	4	pencil
Accent III (MC)										
1.4 GL	11.05 - 11.10	71	1399	4	G4EE	**CL546**	1			coil 4xDIN
						CL595	4	CP054	4	pencil
1.6 GLS	11.05 - 11.10	82	1599	4	G4ED	**CL546**	1			coil 4xDIN
						CL595	4	CP054	4	pencil
Accent III Sedan (MC)										
1.4 GL	11.05 - 11.10	71	1399	4	G4EE	**CL546**	1			coil 4xDIN
						CL595	4	CP054	4	pencil
1.6 GLS	11.05 - 11.10	82	1599	4	G4ED	**CL546**	1			coil 4xDIN
						CL595	4	CP054	4	pencil
Accent IV (RB)										
1.4	11.10 -	79	1396	4	G4FA	**CL584**	4			pencil
1.6	11.10 -	90	1591	4	G4FC	**CL584**	4			pencil
Accent IV Sedan (RB)										
1.4	11.10 -	80	1396	4	G4FA	**CL584**	4			pencil
1.4	11.10 -	74	1368	4	G4LC	**CL584**	4			pencil
1.6	11.10 -	90	1591	4	G4FC	**CL584**	4			pencil
1.6	11.10 -	91	1591	4	G4FC	**CL584**	4			pencil
Atos (MX)										
1.0 i	02.98 - 08.00	40	999	4	G4HC	**CL519**	1			with distributor / year
	08.00 - 03.02	40	999	4	G4HC	**CL523**	1			without distributor / year
1.0 i	03.01 -	43	999	4	G4HC-E	**CL523**	1			
1.1	03.04 -	46	1086	4	G4HG	**CL541**	1			
Atos Prime (MX)										
1.0 i	08.99 - 08.00	40	999	4	G4HC	**CL519**	1			with distributor / year
	08.00 -	40	999	4	G4HC	**CL523**	1			without distributor / year
1.0 i	03.01 -	43	999	4	G4HC-E	**CL523**	1			
1.1	06.03 -	43	1086	4	G4HD	**CL523**	1			
1.1	09.05 -	46	1086	4	G4HG	**CL541**	1			
Coupe (RD)										
1.6 16V	03.98 - 06.00	85	1599	4	G4GR	**CL503**	1			
1.6 i 16V	12.96 - 06.00	84	1599	4	4G61	**CL503**	1			
2.0 16V	03.01 - 04.02	99	1975	4	G4DF	**CL503**	1			
2.0 16V	08.96 - 04.02	102	1975	4	G4GF	**CL503**	1			
Coupe (GK)										
1.6 16V	03.02 - 08.09	77	1599	4	G4ED-G	**CL546**	1			
1.6 16V	03.02 - 08.09	79	1599	4	G4ED-G	**CL546**	1			
2.0	08.01 - 08.09	100	1975	4	G4GC-G	**CL539**	1			
2.0	03.02 - 08.09	102	1975	4	G4GC-G	**CL539**	1			connector with 5 pins
						CL565	1			connector with 3 pins
2.0 GLS	02.03 - 08.09	105	1975	4	G4GC-G	**CL539**	1			
2.7 V6	01.07 - 08.09	121	2656	6	G6BA-G	**CL527**	1			
2.7 V6	03.02 - 08.09	123	2656	6	G6BA-G	**CL527**	1			
Elantra (XD)										
1.6	06.00 - 07.06	66	1599	4	G4GR	**CL503**	1			
1.6	05.03 - 07.06	77	1599	4	G4ED-G	**CL546**	1			
1.6	06.00 - 07.06	79	1599	4	G4ED-G	**CL546**	1			
1.8	06.00 - 07.06	97	1795	4	G4BB	**CL539**	1			
2.0	06.00 - 07.06	102	1975	4	G4GC-G	**CL539**	1			
2.0	06.00 - 07.06	104	1975	4	G4GC	**CL539**	1			
2.0	10.03 - 07.06	105	1975	4	G4GC	**CL565**	1			
Elantra Sedan (XD)										
1.6	06.00 - 07.06	66	1599	4	G4GR	**CL503**	1			

HYUNDAI Elantra Sedan (XD) ▶

model	year	kW	cm³	cyl	engine	coil	pcs	boot	pcs	info
HYUNDAI										
Elantra Sedan (XD)										
1.6	05.03 - 07.06	77	1599	4	G4ED-G	**CL546**	1			
1.6	06.00 - 07.06	79	1599	4	G4ED-G	**CL546**	1			
1.8	06.00 - 07.06	97	1795	4	G4BB	**CL539**	1			
2.0	06.00 - 07.06	102	1975	4	G4GC-G	**CL539**	1			
2.0	06.00 - 07.06	104	1975	4	G4GC	**CL539**	1			
2.0	10.03 - 07.06	105	1975	4	G4GC	**CL565**	1			
Elantra Sedan (MD, UD)										
1.6	06.11 -	97	1591	4	G4FG	**CL584**	4			pencil
Equus / Centennial										
4.5	10.99 - 09.03	195	4498	8	8A80	**CL902**	8			pencil
4.6 V8	03.09 -	269	4627	8	G8BA	**CL902**	8			pencil
4.6 V8	03.09 -	274	4627	8	G8BA	**CL902**	8			pencil
5.0 GDi	03.09 -	316	5038	8	G8BE	**CL902**	8			pencil
Galloper I										
3.0 V6	08.91 - 07.98	104	2972	6	6G72	**CL540**	1			
Galloper II (JK-01)										
3.0 V6	08.98 - 12.03	104	2972	6	G6AT	**CL558**	1			
Genesis (BH)										
3.8 V6	01.08 -	213	3778	6	G6DA	**CL593**	6			pencil
Genesis Coupe										
2.0 T	01.08 -	157	1998	4	G4KF	**CL902**	4			pencil
2.0 T	04.12 -	204	1998	4	G4KF	**CL902**	4			pencil
3.8 V6	01.08 -	223	3778	6	G6DA	**CL593**	6			pencil
Getz (TB)										
1.1	09.02 - 09.05	46	1086	4	G4HD	**CL551**	1			
1.1	09.05 - 06.09	49	1086	4	G4HD	**CL551**	1			
1.3	09.03 - 09.05	63	1341	4	G4EA	**CL524**	1			
1.3 i	09.02 - 03.04	60	1341	4	G4EA	**CL524**	1			
1.4 i	08.05 -	71	1399	4	G4EE	**CL503**	1			
1.6	09.02 - 09.05	77	1599	4	G4ED-G	**CL546**	1			
1.6	08.05 -	78	1599	4	G4ED-G	**CL546**	1			
Grandeur (TG)										
2.7	05.06 -	141	2656	6	G6BA	**CL908**	6	CP055	6	pencil
3.3	04.05 -	173	3342	6	G6DB	**CL593**	6			pencil
3.8	06.05 -	195	3778	6	G6DA	**CL593**	6			pencil
H-1 / Starex										
2.4	06.97 - 07.01	82	2351	4	G4CS	**CL525**	1			with distributor / year
	08.01 - 04.04	82	2351	4	G4CS	**CL515**	2	CP012	2	semidirect / pencil / year
2.4 4WD	02.98 - 07.01	82	2351	4	G4CS	**CL525**	1			with distributor / year
	08.01 - 04.04	82	2351	4	G4CS	**CL515**	2	CP012	2	semidirect / pencil / year
2.4 4WD	06.01 - 04.04	99	2351	4	G4JS	**CL515**	2	CP012	2	semidirect / pencil
H-1 Van										
2.4	03.00 - 04.04	82	2351	4	G4CS	**CL525**	1			
H100 Bus (P)										
2.4	01.97 - 03.00	84	2351	4	G4CS	**CL525**	1			
2.4	07.93 - 03.00	90	2351	4	G4CS	**CL525**	1			
H100 Van										
2.4	10.97 - 12.04	82	2351	4	G4CS	**CL525**	1			
2.4	07.93 - 07.97	90	2351	4	G4CS	**CL525**	1			
i10 (PA)										
1.0	01.11 -	51	998	3	G3LA	**CL903**	3			pencil
1.1	01.08 -	49	1086	4	G4HG	**CL541**	1			
1.1	04.11 -	51	1086	4	G4HG	**CL541**	1			
1.2	11.08 -	57	1248	4	G4LA	**CL904**	4			pencil
1.2	04.11 -	63	1248	4	G4LA	**CL904**	4			pencil
i10 (IA)										
1.0	12.13 -	49	998	3	G3LA	**CL903**	3			pencil
1.0 LPG	02.14 -	51	998	3	B3LA	**CL903**	3			pencil
i20 (PB, PBT)										
1.2	09.08 -	57	1248	4	G4LA	**CL904**	4			pencil
1.4	09.08 -	74	1396	4	G4FA	**CL584**	4			pencil
1.6	09.08 -	93	1591	4	G4FC	**CL584**	4			pencil
i20 (GB)										
1.2	11.14 -	55	1248	4	G4LA	**CL904**	4			pencil / with start/stop system
1.2	11.14 -	62	1248	4	G4LA	**CL904**	4			pencil / with start/stop system
i30 (FD)										
1.4	10.07 - 11.11	77	1396	4	G4FA	**CL566**	4			pencil
1.4	10.07 - 11.11	80	1396	4	G4FA	**CL566**	4			pencil
1.6	10.07 - 11.11	85	1591	4	G4FC	**CL566**	4			pencil OEM No. 27301-2B000
						CL584	4			pencil OEM No 27301-2B010
1.6	10.07 - 11.11	90	1591	4	G4FC	**CL566**	4			pencil

HYUNDAI i30 (FD)

model	year	kW	cm³	cyl	engine	coil	pcs	boot	pcs	info
HYUNDAI										
i30 (FD)										
1.6	02.08 - 11.11	93	1591	4	G4FC	**CL584**	4			pencil
2.0	10.07 - 11.11	105	1975	4	G4GC-G/G4GC	**CL901**	1			
i30 (GD)										
1.4	12.11 -	73	1396	4	G4FA	**CL584**	4			pencil
1.6 GDI	12.11 -	99	1591	4	G4FD	**CL926**	4			pencil
i30 Coupe										
1.4	05.13 -	73	1396	4	G4FA	**CL584**	4			pencil
1.6 GDI	05.13 -	99	1591	4	G4FD	**CL926**	4			pencil
i30 CW (FD)										
1.6	02.08 - 06.12	85	1591	4	G4FC	**CL584**	4			pencil
1.6	02.08 - 06.12	90	1591	4	G4FC	**CL584**	4			pencil
1.6	02.08 - 06.12	93	1591	4	G4FC	**CL584**	4			pencil
i30 CW (GD)										
1.6	06.12 -	95	1591	4	G4FG	**CL584**	4			pencil
1.6 GDI	06.12 -	99	1591	4	G4FD	**CL926**	4			pencil
i40 (VF)										
1.6 GDI	03.12 -	99	1591	4	G4FD	**CL926**	4			pencil
2.0 GDI	03.12 -	131	1999	4	G4NC	**CL908**	4	CP055	4	pencil
i40 CW (VF)										
1.6 GDI	07.11 -	99	1591	4	G4FD	**CL926**	4			pencil
2.0 GDI	07.11 -	130	1999	4	G4NC	**CL909**	4			pencil
ix20 (JC)										
1.4	11.10 -	66	1396	4	G4FA	**CL584**	4			pencil
ix35 (LM, EL, ELH)										
1.6	11.10 -	99	1591	4	G4FD	**CL926**	4			pencil
Lantra I (J-1)										
1.5 i.e.	10.90 - 11.95	63	1468	4	G15B/G4DJ	**CL508**	1			
1.6 i.e. 16V	10.90 - 11.95	78	1596	4	G4CR	**CL526**	1			
1.6 i.e. 16V	10.90 - 11.95	84	1596	4	G4CR	**CL526**	1			
1.8 i.e. 16V	10.90 - 11.95	93	1836	4	G4CN	**CL526**	1			
Lantra II (J-2)										
1.5 12V	12.96 - 09.00	65	1495	4	G4EK	**CL502**	1			
1.6 16V	11.95 - 09.00	84	1599	4	4G61	**CL503**	1			
1.6 i	11.95 - 09.00	66	1599	4	G4GR	**CL503**	1			
1.8 16V	11.95 - 09.00	94	1795	4	G4GM	**CL503**	1			
2.0 16V	08.96 - 09.00	102	1975	4	G4GF	**CL503**	1			
Lantra II Wagon (J-2)										
1.5 12V	04.97 - 10.00	65	1495	4	G4EK	**CL502**	1			
1.6 16V	02.96 - 10.00	84	1599	4	4G61	**CL503**	1			
1.6 i	02.96 - 10.00	66	1599	4	G4GR	**CL503**	1			
1.8 16V	02.96 - 10.00	94	1795	4	G4GM	**CL503**	1			
2.0 16V	12.96 - 10.00	102	1975	4	G4GF	**CL503**	1			
Matrix (FC)										
1.6	06.01 - 08.10	76	1599	4	G4ED-G	**CL546**	1			
1.6	01.02 - 12.05	66	1599	4	G4ED-L	**CL546**	1			
1.8	06.01 - 08.10	90	1795	4	G4GB-G	**CL539**	1			connector with 5 pins
						CL565	1			connector with 3 pins
Pony (X-2)										
1.3	10.89 - 01.95	43	1299	4	G4DG	**CL508**	1			
1.3	10.89 - 01.95	49	1299	4	G4DG	**CL508**	1			
1.5	10.89 - 01.95	53	1468	4	G15B/G4DJ	**CL508**	1			
1.5 i	10.89 - 01.95	61	1468	4	G15B/G4DJ	**CL508**	1			
1.5 i	10.89 - 01.95	62	1468	4	G15B/G4DJ	**CL508**	1			
Pony / Excel Sedan (X-2)										
1.3	01.90 - 01.95	49	1299	4	G4DG	**CL508**	1			
1.5	01.90 - 01.95	53	1468	4	G15B/G4DJ	**CL508**	1			
1.5 i	01.90 - 01.95	61	1468	4	G15B/G4DJ	**CL508**	1			
1.5 i	01.90 - 01.95	62	1468	4	G15B/G4DJ	**CL508**	1			
S Coupe (SLC)										
1.5 i	02.90 - 05.96	62	1468	4	G15B/G4DJ	**CL508**	1			
1.5 i	04.92 - 05.96	65	1495	4	G4EK	**CL508**	1			
1.5 i Turbo	04.91 - 05.96	85	1495	4	G4EK-TC	**CL508**	1			
Santa Fé I (SM)										
2.0	08.01 - 03.06	99	1997	4	G4BP	**CL515**	2	CP012	2	semidirect / pencil
2.4 16V	02.01 - 03.06	100	2351	4	G4JS-G	**CL515**	2	CP012	2	semidirect / pencil
2.4 16V	02.01 - 03.06	107	2351	4	G4JS-G	**CL515**	2	CP012	2	semidirect / pencil
2.4 16V 4x4	02.01 - 03.06	100	2351	4	G4JS-G	**CL515**	2	CP012	2	semidirect / pencil
2.4 16V 4x4	02.01 - 03.06	107	2351	4	G4JS-G	**CL515**	2	CP012	2	semidirect / pencil
2.7 V6 4x4	02.01 - 03.06	127	2656	6	G6BA-G	**CL527**	1			
Santa Fé II (CM)										
2.4	11.10 -	128	2359	4	G4KE	**CL593**	4			pencil

HYUNDAI Santa Fé II (CM)

model	year	kW	cm³	cyl	engine	coil	pcs	boot	pcs	info
HYUNDAI										
Santa Fé II (CM)										
2.4 4x4	07.10 -	128	2359	4	G4KE	**CL593**	4			pencil
2.7	01.07 -	125	2657	6	G6BA	**CL590**	3	CP053	3	pencil / right side
						CL908	3	CP055	3	pencil / left side
2.7 4x4	01.07 -	125	2657	6	G6BA	**CL590**	3	CP053	3	pencil / right side
						CL908	3	CP055	3	pencil / left side
2.7 V6 GLS	01.07 -	139	2656	6	G6EA	**CL590**	3	CP053	3	pencil / right side
						CL908	3	CP055	3	pencil / left side
2.7 V6 GLS 4x4	01.07 -	139	2656	6	G6EA	**CL590**	3	CP053	3	pencil / right side
						CL908	3	CP055	3	pencil / left side
Santa Fé III (DM)										
2.4	09.12 -	141	2359	4	G4KJ	**CL902**	4			pencil
2.4 4WD	09.12 -	141	2359	4	G4KJ	**CL902**	4			pencil
Santamo										
2.0 16V	05.99 -	102	1997	4	G4JP	**CL532**	1			
2.0 16V 4x4	05.99 -	102	1997	4	G4CP	**CL532**	1			
Sonata II (Y-2)										
2.0 i	01.91 - 10.93	80	1997	4	G4CP-U	**CL526**	1			
2.0 i 16V	01.91 - 10.93	96	1997	4	G4CP-D	**CL526**	1			
3.0 i V6	01.91 - 10.93	107	2972	6	G6AT	**CL525**	1			
Sonata III (Y-3)										
1.8 i	05.93 - 06.98	72	1796	4	G4CM	**CL525**	1			
2.0 i	08.96 - 06.98	70	1997	4	G4EP	**CL525**	1			
2.0 i	06.94 - 08.96	77	1997	4	G4CP	**CL525**	1			
2.0 i 16V	06.96 - 06.98	92	1997	4	G4CP-DM	**CL526**	1			
2.0 i 16V	05.93 - 06.98	102	1997	4	G4CP-D	**CL526**	1			
3.0 i V6	05.93 - 06.98	107	2972	6	G6AT	**CL525**	1			
Sonata IV (EF)										
2.0 16V	10.01 - 11.04	96	1997	4	G4JP-EG	**CL515**	2	CP012	2	semidirect / pencil
2.0 16V	06.98 - 10.01	100	1997	4	G4JP-G	**CL515**	2	CP012	2	semidirect / pencil
2.4 16V	03.98 - 10.01	105	2351	4	G4BS	**CL515**	2	CP012	2	semidirect / pencil
2.5 V6 24V	06.98 - 10.01	118	2493	6	G6BV-G	**CL528**	1			
2.7 V6	10.01 - 11.04	127	2656	6	G6BA-G	**CL528**	1			
Sonata V (NF)										
2.0 VVTi GLS	05.05 -	106	1997	4	G4KA	**CL909**	4			pencil
2.0 VVTi GLS	01.08 -	121	1997	4	G4KD	**CL909**	4			pencil
2.4	01.05 -	119	2359	4	G4KC	**CL593**	4			pencil
3.3	01.05 -	171	3342	6	G6DB	**CL593**	6			pencil
3.3	06.05 -	173	3342	6	G6DB	**CL593**	6			pencil
3.3	01.08 -	184	3342	6	G6DB	**CL593**	6			pencil
Sonata VI (YF)										
2.0	01.09 -	110	1998	4	G4KD	**CL902**	4			pencil
2.0 i	01.11 -	121	1998	4	G4KD	**CL908**	4	CP055	4	pencil
2.4	01.09 -	131	2359	4	G4KC	**CL902**	4			pencil
2.4	01.09 -	128	2359	4	G4KC	**CL902**	4			pencil
Trajet (FO)										
2.0	03.00 - 02.04	100	1997	4	G4JP-G	**CL565**	1			coil 4xDIN / year
	02.04 - 07.08	100	1997	4	G4JP-G	**CL515**	2	CP012	2	semidirect / pencil / year
2.0	01.04 - 02.04	103	1975	4	G4GC-G	**CL565**	1			coil 4xDIN / year
	02.04 - 07.08	103	1975	4	G4GC-G	**CL515**	2	CP012	2	semidirect / pencil / year
2.7 V6	09.00 - 07.08	127	2656	6	G6BA-G	**CL528**	1			
Tucson (JM)										
2.0	08.04 - 03.10	104	1975	4	G4GC	**CL515**	2	CP012	2	semidirect / pencil
						CL565	1			coil 4xDIN
2.0 Allrad	08.04 - 03.10	104	1975	4	G4GC	**CL515**	2	CP012	2	semidirect / pencil
						CL565	1			coil 4xDIN
2.7 Allrad	08.04 - 03.10	129	2656	6	G6BA-G	**CL932**	1			
Veloster (FS)										
1.6 GDI	03.11 -	103	1591	4	G4FD	**CL926**	4			pencil
1.6 MPI	04.11 -	97	1591	4	G4FG	**CL584**	4			pencil
1.6 T-GDI	10.12 -	137	1591	4	G4FJ	**CL926**	4			pencil
XG (XG)										
30	12.98 - 12.05	138	2972	6	G6CT-G	**CL552**	3			semidirect / pencil
350	10.02 - 12.05	145	3497	6	G6CU	**CL552**	3			semidirect / pencil
INFINITI										
FX										
45	02.03 - 12.08	232	4494	8	VK45DE	**CL916**	8	CP019	8	pencil
45 Allrad	01.03 - 12.08	232	4494	8	VK45DE	**CL916**	8	CP019	8	pencil
45 Allrad	09.02 - 12.05	235	4494	8	VK45DE	**CL916**	8	CP019	8	pencil
45 Allrad	09.05 - 12.08	239	4494	8	VK45DE	**CL916**	8	CP019	8	pencil
50 AWD	10.08 -	287	5026	8	VK50VE	**CL911**	8	CP019	8	pencil
50 AWD	06.13 -	309	5026	8	VK50VE	**CL911**	8	CP019	8	pencil

model	year	kW	cm³	cyl	engine	coil	pcs	boot	pcs	info
INFINITI										
G20										
2.0	01.90 - 12.97	85	1998	4	SR20DE	**CL509**	1			
I30										
3.0	01.97 -	142	2988	6	VQ30DE	**CL535**	3	CP020	3	pencil / right side
						CL536	3	CP021	3	pencil / left side
								CP023	3	right side / 2nd COP boot
								CP024	3	left side / 2nd COP boot
M45										
4.5	09.06 - 12.10	242	4494	8	VK45DE	**CL916**	8	CP019	8	pencil
4.5X	09.07 - 12.10	242	4494	8	VK45DE	**CL916**	8	CP019	8	pencil
4.5	01.05 -	250	4494	8	VK45DE	**CL916**	8	CP019	8	pencil
4.5X	09.07 - 12.08	250	4494	8	VK45DE	**CL916**	8	CP019	8	pencil
QX4										
3.3	01.97 -	125	3275	6	VG33E	**CL913**	5			pencil for cyl 2 - 3 - 4 - 5 - 6
						CL914	1			pencil for cyl 1
JAGUAR										
XF (_J05_ , CC9)										
2.0	06.12 - 04.15	177	1999	4	204PT	**CL415**	4			pencil
XJ (X35_ , _J12_ , _J24_)										
2.0	05.12 -	177	1999	4	204PT	**CL415**	4			pencil
JEEP										
Commander (XK)										
3.7 V6 4x4	09.05 - 12.10	157	3701	6	EKG	**CL709**	6			pencil
4.7 V8 4x4	09.05 - 12.10	170	4701	8	EVA	**CL709**	8			pencil
5.7 V8 4x4	09.05 - 12.10	240	5654	8	EZB	**CL718**	8	CP064	16	pencil / twin coil
Compass (MK49)										
2.0	05.11 -	115	1998	4	ECN			CP066	4	for pencil coil
2.4	08.06 -	125	2359	4	ED3/ERZ			CP066	4	for pencil coil
2.4 4x4	09.06 -	125	2359	4	ED3/ERZ			CP066	4	for pencil coil
Grand Cherokee I (ZJ)										
4.0 i 4x4 (Z)	10.95 - 12.97	130	3960	6	S01	**CL712**	1			year
	01.98 - 04.99	130	3960	6	S01	**CL713**	1			year
4.0 i 4x4 (ZJ)	09.91 - 12.97	132	3964	6	ERH	**CL712**	1			year
	01.98 - 04.99	132	3964	6	ERH	**CL713**	1			year
4.0 i 4x4 (ZJ)	09.91 - 12.97	135	3964	6	MX	**CL712**	1			year
	01.98 - 04.99	135	3964	6	MX	**CL713**	1			year
4.0 Laredo	10.96 - 12.97	131	3964	6	ERH	**CL712**	1			year
	01.98 - 09.98	131	3964	6	ERH	**CL713**	1			year
5.2	10.96 - 12.97	164	5210	8	ELF	**CL712**	1			year
	01.98 - 09.98	164	5210	8	ELF	**CL713**	1			year
5.2 4x4	10.96 - 12.97	164	5210	8	ELF	**CL712**	1			year
	01.98 - 09.98	164	5210	8	ELF	**CL713**	1			year
5.2 4x4 (Z)	10.95 - 12.97	156	5216	8	Y01	**CL712**	1			year
	01.98 - 04.99	156	5216	8	Y01	**CL713**	1			year
5.2 i 4x4 (ZJ)	01.92 - 04.99	155	5210	8	ELF	**CL712**	1			
5.2 i 4x4 (ZJ)	09.92 - 04.99	158	5210	8	Y	**CL712**	1			
5.2 Limited 4x4	10.96 - 12.97	136	5210	8	ELF	**CL712**	1			year
	01.98 - 09.98	136	5210	8	ELF	**CL713**	1			year
5.9 i 4x4	08.97 - 04.99	177	5901	8		**CL713**	1			
Grand Cherokee II (WJ, WG)										
4.7 V8	10.04 - 09.05	167	4701	8	EVA	**CL709**	8			pencil
4.7 V8 4x4	04.99 - 08.00	162	4701	8	EVA	**CL709**	8			pencil
4.7 V8 4x4	04.99 - 09.05	164	4701	8	EVA	**CL709**	8			pencil
4.7 V8 4x4	06.03 - 09.05	167	4701	8	EVA	**CL709**	8			pencil
4.7 V8 4x4	10.01 - 09.05	190	4701	8	EVC	**CL709**	8			pencil
Grand Cherokee III (WH, WK)										
3.7 V6 4x4	06.05 - 12.10	157	3701	6	EKG	**CL709**	6			pencil
4.7 V8 4x4	06.05 - 12.10	170	4701	8	EVA	**CL709**	8			pencil
5.7 V8 4x4	01.06 - 12.10	240	5654	8	EZB	**CL718**	8	CP064	16	pencil / twin coil
6.1 SRT8 4x4	03.06 - 12.10	313	6059	8	ESF	**CL718**	8	CP064	16	pencil / twin coil
Cherokee (XJ)										
2.5	10.95 - 12.97	89	2469	4	EPE	**CL712**	1			year
	01.98 - 09.01	89	2469	4	EPE	**CL713**	1			year
2.5	10.90 - 09.96	89	2464	4	EPE	**CL712**	1			
2.5	10.86 - 09.90	90	2464	4	EPE	**CL712**	1			
2.5 4x4	10.86 - 09.90	90	2464	4	EPE	**CL712**	1			
2.5 i 4x4	10.84 - 12.97	87	2464	4	EPE	**CL712**	1			year
	01.98 - 09.01	87	2464	4	EPE	**CL713**	1			year
2.5 i 4x4	12.91 - 12.97	90	2469	4	EPE/HX	**CL712**	1			year
	01.98 - 09.01	90	2469	4	EPE/HX	**CL713**	1			year
2.5 SE	10.96 - 12.97	87	2464	4	EPE	**CL712**	1			year
	01.98 - 09.99	87	2464	4	EPE	**CL713**	1			year

JEEP Cherokee (XJ) ▶

model	year	kW	cm³	cyl	engine	coil	pcs	boot	pcs	info
JEEP										
Cherokee (XJ)										
4.0 i	07.98 - 09.01	127	3960	6		**CL712**	1			coil 1xSAE
								CP014	6	for rail coil
4.0 i	12.91 - 09.01	135	3964	6	MX	**CL712**	1			
4.0 i	02.99 - 09.01	135	3960	6	MX	**CL712**	1			
4.0 i	01.88 - 09.01	136	3964	6	ERH	**CL712**	1			
4.0 i 4x4	01.95 - 09.01	131	3964	6	ERH	**CL712**	1			coil 1xSAE
								CP014	6	for rail coil
Cherokee (KJ)										
2.4 4x4	09.01 - 01.08	108	2429	4	ED1	**CL706**	1			
3.7 4x4	09.01 - 01.08	155	3698	6	EKG	**CL709**	6			pencil
3.7 4x4	08.03 - 01.08	150	3700	6	EKG	**CL709**	6			pencil
3.7 Laredo	10.01 - 09.04	150	3700	6	EKG	**CL709**	6			pencil
Cherokee (KK)										
3.7 V6 4x4	01.08 -	151	3700	6	EKG	**CL709**	6			pencil
Patriot (MK74)										
2.4 4x4	01.08 -	125	2359	4	ED3			CP066	4	for pencil coil
Wrangler I (YJ, SJ_)										
2.5	12.91 - 08.96	89	2464	4	EPE	**CL712**	1			
4.0	12.91 - 08.96	131	3964	6	ERH	**CL712**	1			
Wrangler II (TJ)										
2.5	08.96 - 12.97	87	2464	4	P00	**CL712**	1			year
	01.98 - 04.07	87	2464	4	P00	**CL713**	1			year
4.0	06.98 - 04.07	124	3960	6		**CL713**	1			coil 1xSAE
								CP014	6	for rail coil
4.0	08.96 - 12.97	130	3960	6	S01	**CL712**	1			year
	01.98 - 04.07	130	3960	6	S01	**CL713**	1			year
4.0 Rubicon	08.03 - 04.07	128	3960	6		**CL713**	1			coil 1xSAE
								CP014	6	for rail coil
KIA										
Avella										
1.3	11.95 - 12.01	55	1324	4	B3	**CL558**	1			
1.5	02.97 - 12.01	55	1498	4		**CL558**	1			
Avella CC										
1.3	11.95 - 12.01	55	1324	4	B3	**CL558**	1			
1.5	02.97 - 12.01	55	1498	4		**CL558**	1			
Carens I (FC)										
1.8 i	11.00 - 07.02	81	1793	4	T8	**CL505**	2	CP010	2	semidirect / pencil
Carens II (FJ)										
1.6	04.03 - 09.05	77	1594	4	GA6D	**CL530**	1			
1.8	07.02 -	93	1793	4	TB	**CL505**	2	CP010	2	semidirect / pencil
2.0 CVVT	08.04 -	102	1975	4	G4GC	**CL565**	1			
Carens III (UN)										
1.6 CVVT	10.10 -	93	1591	4	G4FC	**CL584**	4			pencil
1.6 CVVT	08.09 -	97	1591	4	G4FC	**CL584**	4			pencil
2.0 CVVT	09.06 -	106	1998	4	G4KA	**CL593**	4			pencil
Carens IV										
1.6	03.13 -	99	1591	4	G4FD	**CL926**	4			pencil
2.0	03.13 -	130	1999	4	G4NC	**CL908**	4	CP055	4	pencil
Carnival I (UP)										
2.5 V6	08.99 - 10.01	121	2497	6	KRV6	**CL531**	1			
Carnival II (GQ)										
2.5 V6	10.01 -	110	2497	6	K5	**CL531**	1			
3.5	07.02 -	143	3497	6	G6CU	**CL552**	3			semidirect / pencil
Carnival / Grand Carnival III (VQ)										
2.7 V6	06.06 -	139	2656	6	G6EA	**CL590**	6	CP053	6	pencil
Cee'd										
1.4 CVVT	05.12 -	66	1396	4	G4FA-L	**CL584**	4			pencil
1.6 GDI	05.12 -	99	1591	4	G4FD	**CL926**	4			pencil
Cee'd Sportswagon										
1.4 CVVT	09.12 -	73	1396	4	G4FA	**CL584**	4			pencil
1.6 GDI	09.12 -	99	1591	4	G4FD	**CL926**	4			pencil
Cee'd CC (ED)										
1.4	12.06 -	77	1396	4	G4FA	**CL566**	4			pencil
1.4	12.06 -	80	1396	4	G4FA	**CL566**	4			pencil
1.4 CVVT	06.10 -	66	1396	4	G4FA-L	**CL566**	4			pencil
1.6	09.07 -	85	1591	4	G4FC	**CL566**	4			pencil
1.6	12.06 -	90	1591	4	G4FC	**CL566**	4			pencil
1.6	02.08 -	93	1591	4	G4FC	**CL566**	4			pencil
1.6 CVVT	10.10 -	92	1591	4	G4FC	**CL566**	4			pencil
2.0	12.06 -	105	1975	4	G4GC	**CL901**	1			

model	year	kW	cm³	cyl	engine	coil	pcs	boot	pcs	info
KIA										
Cee'd SW (ED)										
1.4	10.10 -	77	1396	4	G4FA	**CL584**	4			pencil
1.4	09.07 -	80	1396	4	G4FA	**CL566**	4			pencil
1.4 CVVT	10.10 -	66	1396	4	G4FA-L	**CL566**	4			pencil
1.6	09.07 -	85	1591	4	G4FC	**CL566**	4			pencil
1.6	09.07 -	90	1591	4	G4FC	**CL566**	4			pencil
1.6	09.07 -	93	1591	4	G4FC	**CL566**	4			pencil
1.6 CVVT	06.09 -	92	1591	4	G4FC	**CL566**	4			pencil
2.0	09.07 -	105	1975	4	G4GC	**CL901**	1			
Cerato (LD)										
1.6	07.04 -	77	1599	4	G4ED	**CL546**	1			
1.6	05.06 -	90	1591	4	G4FC	**CL566**	4			pencil
2.0	04.04 -	105	1975	4	G4GC	**CL565**	1			
Cerato Sedan (LD)										
1.6	04.04 -	77	1599	4	G4ED	**CL546**	1			
1.6	05.06 -	90	1591	4	G4FC	**CL566**	4			pencil
2.0	04.04 -	105	1975	4	G4GC	**CL565**	1			
Cerato II Sedan (TD)										
1.6	01.10 -	93	1591	4	G4FC	**CL584**	4			pencil
2.0	01.09 -	115	1998	4	G4KD	**CL902**	4			pencil
Clarus (K9A)										
1.8 i 16V	07.96 -	85	1793	4	T8	**CL505**	2	CP010	2	semidirect / pencil
2.0 i 16V	07.96 -	98	1998	4	FE (16V)	**CL545**	1			
Clarus Combi (GC)										
1.8 i 16V	05.98 -	85	1793	4	T8	**CL505**	2	CP010	2	semidirect / pencil
2.0 i 16V	05.98 -	98	1998	4	FE (16V)	**CL545**	1			
Joice										
2.0	09.01 -	88	1997	4	G4CP	**CL532**	1			
2.0	02.00 -	102	1997	4	G4CP	**CL532**	1			
Magentis (GD)										
2.0	05.01 -	100	1997	4	G4JP	**CL515**	2	CP012	2	semidirect / pencil
2.5 V6	05.01 -	124	2493	6	G6BV	**CL528**	1			
Magentis (MG)										
2.0	07.09 -	121	1998	4	G4KD	**CL902**	4			pencil
2.7	11.05 -	138	2656	6	G6EA	**CL590**	6	CP053	6	pencil
Opirus (GH)										
3.5	09.03 -	149	3497	6	G6CU	**CL553**	3	CP011	6	semidirect / pencil
3.8 V6	10.06 -	196	3778	6	G6DA	**CL593**	6			pencil
Optima										
2.0	03.12 -	125	1999	4	G4KD	**CL902**	4			pencil
2.0	09.10 -	204	1998	4		**CL902**	4			pencil
2.0 CVVL	03.12 -	121	1999	4	G4KD	**CL902**	4			pencil
Picanto (BA)										
1.0	04.04 -	45	999	4	G4HE	**CL541**	1			
1.0	11.09 -	46	999	4	G4HE	**CL541**	1			
1.1	04.04 -	48	1086	4	G4HG	**CL541**	1			
Picanto (TA)										
1.0	05.11 -	51	998	3	G3LA	**CL903**	3			pencil
1.0 BiFuel	05.11 -	60	998	3	B3LA	**CL903**	3			pencil
1.2	09.11 -	63	1248	4	G4LA	**CL904**	4			pencil / with start/stop system
Pride (DA)										
1.1 i	01.91 -	38	1138	4	B1	**CL558**	1			
1.3 16V	01.90 -	44	1324	4	B3	**CL558**	1			
1.3 16V	10.96 -	47	1324	4	B3	**CL558**	1			
1.3 16V	01.90 -	53	1324	4	B3	**CL558**	1			
1.3 i	01.90 -	51	1324	4		**CL558**	1			
Pride Combi										
1.3	08.99 -	47	1324	4		**CL558**	1			
Pro Cee'd (ED)										
1.4	02.08 -	77	1396	4	G4FA	**CL584**	4			pencil
1.4 CVVT	06.10 -	66	1396	4	G4FA-L	**CL584**	4			pencil
1.6	02.08 -	90	1591	4	G4FC	**CL584**	4			pencil
1.6	02.08 -	93	1591	4	G4FC	**CL584**	4			pencil
1.6 CVVT	10.10 -	92	1591	4	G4FC	**CL584**	4			pencil
2.0 LPG	01.09 - 12.09	105	1975	4	G4GC	**CL901**	1			
Pro Cee'd										
1.4 CVVT	03.13 -	73	1396	4	G4FA	**CL584**	4			pencil
1.6 GDI	03.13 -	99	1591	4	G4FD	**CL926**	4			pencil
Rio Combi (DC)										
1.3	08.00 - 02.05	55	1343	4	A3E	**CL529**	1			
1.3	08.00 - 02.05	60	1343	4	A3E	**CL529**	1			
1.5 16V	09.02 - 02.05	71	1493	4	A5D	**CL530**	1			

KIA Rio Combi (DC) ▶

model	year	kW	cm³	cyl	engine	coil	pcs	boot	pcs	info
KIA										
Rio Combi (DC)										
1.5 16V	08.00 - 02.05	72	1493	4	A5D	**CL530**	1			
Rio Sedan (DC_)										
1.3	09.00 - 02.05	55	1343	4	A3E	**CL529**	1			
1.3	08.02 - 02.05	60	1343	4	A3E	**CL529**	1			
1.5 16V	09.00 - 02.05	72	1493	4	A5D	**CL530**	1			
Rio II (JB)										
1.4 16V	03.05 -	71	1399	4	G4EE	**CL546**	1			coil 4xDIN
						CL595	4	CP054	4	pencil
1.6 CVVT	03.05 -	82	1599	4	G4ED	**CL546**	1			coil 4xDIN
						CL595	4	CP054	4	pencil
Rio II Sedan (JB)										
1.4 16V	03.05 -	71	1399	4	G4EE	**CL546**	1			coil 4xDIN
						CL595	4	CP054	4	pencil
1.6 16V	03.05 -	82	1599	4	G4ED	**CL546**	1			coil 4xDIN
						CL595	4	CP054	4	pencil
Rio III (UB)										
1.25 CVVT	09.11 -	63	1248	4	G4LA	**CL904**	4			pencil / with start/stop system
1.25 LPG	09.11 -	63	1248	4	G4LA	**CL904**	4			pencil / with start/stop system
1.4 CVVT	09.11 -	80	1396	4	G4FA	**CL584**	4			pencil
1.4 CVVT	09.11 -	79	1396	4	G4FA	**CL584**	4			pencil
1.6 CVVT	06.12 -	90	1591	4	G4FC	**CL584**	4			pencil
Rio III Sedan (UB)										
1.25 CVVT	10.11 -	63	1248	4	G4LA	**CL904**	4			pencil / with start/stop system
1.4 CVVT	10.11 -	80	1396	4	G4FA	**CL584**	4			pencil
1.6 CVVT	06.12 -	90	1591	4	G4FC	**CL584**	4			pencil
Sephia (FA)										
1.5 i	02.96 - 10.97	59	1498	4	B5	**CL504**	1			coil 1xDIN / with distributor
						CL589	2	CP010	2	semidirect / pencil
1.6 i	01.95 - 10.97	59	1598	4	B6	**CL504**	1			coil 1xDIN / with distributor
						CL505	2	CP010	2	semidirect / pencil
1.8 i 16V	01.95 - 10.97	82	1793	4	OK24N/OK26Y	**CL505**	2	CP010	2	semidirect / pencil
Sephia Sedan (FA)										
1.5 i	02.96 - 10.97	59	1498	4	B5	**CL504**	1			coil 1xDIN / with distributor
						CL589	2	CP010	2	semidirect / pencil
1.6 i	09.93 - 10.97	59	1598	4	B6	**CL504**	1			
1.8 i 16V	01.95 - 10.97	82	1793	4	OK24N/OK26Y	**CL505**	2	CP010	2	semidirect / pencil
Shuma (FB)										
1.5 i 16V	10.97 - 03.01	65	1498	4		**CL589**	2	CP010	2	semidirect / pencil
1.8 i 16V	10.97 - 03.01	81	1793	4	T8	**CL505**	2	CP010	2	semidirect / pencil
Shuma Sedan (FB)										
1.5	03.96 - 12.98	59	1498	4	OK280	**CL589**	2	CP010	2	semidirect / pencil
1.5 i 16V	10.97 - 10.01	65	1498	4		**CL589**	2	CP010	2	semidirect / pencil
1.8 GX	05.99 - 10.01	85	1798	4		**CL505**	2	CP010	2	semidirect / pencil
Shuma II (FB)										
1.6	05.01 - 08.04	75	1594	4	GA6D	**CL530**	1			
1.8	04.03 - 08.04	84	1793	4	T8	**CL505**	2	CP010	2	semidirect / pencil
Shuma II Sedan (FB)										
1.6	05.01 - 05.04	75	1594	4	GA6D	**CL530**	1			
Sorento I (JC)										
2.4	08.02 -	102	2351	4	G4JS	**CL515**	2	CP012	2	semidirect / pencil
3.3 V6	12.06 -	177	3297	6		**CL593**	6			pencil
3.3 V6 4WD	11.07 -	182	3342	6	G6DB	**CL593**	6			pencil
3.5 V6 4WD	08.02 -	143	3497	6	G6CU	**CL552**	3			semidirect / pencil
Sorento II (XM)										
2.4 CVVT	11.09 -	128	2359	4	G4KE	**CL593**	4			pencil
2.4 CVVT	10.12 -	141	2359	4	G4KJ	**CL902**	4			pencil
2.4 CVVT 4WD	11.09 -	128	2359	4	G4KE	**CL593**	4			pencil
2.4 CVVT 4WD	10.12 -	141	2359	4	G4KJ	**CL902**	4			pencil
Soul (AM)										
1.6 CVVT	02.09 -	77	1591	4	G4FC	**CL584**	4			pencil
1.6 CVVT	02.09 -	93	1591	4	G4FC	**CL584**	4			pencil
1.6 CVVT	03.12 -	95	1591	4	G4FC	**CL584**	4			pencil
1.6 GDI	06.11 -	103	1591	4	G4FD	**CL926**	4			pencil
Soul II (PS)										
1.6 GDI	02.14 -	97	1591	4	G4FD	**CL926**	4			pencil
Sportage (K00)										
2.0	10.00 - 08.03	87	1998	4	FE (16V)	**CL548**	2	CP013	2	semidirect / pencil
2.0 4WD	10.00 - 08.03	87	1998	4	FE (16V)	**CL548**	2	CP013	2	semidirect / pencil
2.0 i 4WD	04.94 - 08.99	70	1998	4	FE (8V)	**CL544**	1			
2.0 i 16V	10.99 - 08.03	94	1998	4	FE (16V)	**CL302**	1			coil 4xPIN
						CL548	2	CP013	2	semidirect / pencil

KIA Sportage (K00) ▶

model	year	kW	cm³	cyl	engine	coil	pcs	boot	pcs	info
KIA										
Sportage (K00)										
2.0 i 16V 4WD	04.94 - 08.03	94	1998	4	FE (16V)	**CL302**	1			coil 4xPIN
						CL548	2	CP013	2	semidirect / pencil
Sportage (JE_, KM_)										
2.0 16V 4WD	09.04 -	104	1975	4	G4GC	**CL565**	1			
2.0 i 16V	09.04 -	104	1975	4	G4GC	**CL565**	1			
2.7 V6 4WD	09.04 -	129	2656	6	G6BA	**CL932**	1			
Sportage (SL)										
1.6 GDI	02.11 -	99	1591	4	G4FD	**CL926**	4			pencil
2.0 CVVT	07.10 -	120	1998	4	G4KD	**CL902**	4			pencil
2.0 CVVT AWD	07.10 -	120	1998	4	G4KD	**CL902**	4			pencil
Venga (YN)										
1.4 CVVT	02.10 -	66	1396	4	G4FA-L	**CL584**	4			pencil
1.6 CVVT	02.10 -	92	1591	4	G4FC	**CL584**	4			pencil
LADA (VAZ)										
110										
1.5	01.95 -	57	1499	4	VAZ-2111	**CL801**	1			
1.5 16V	10.00 -	67	1499	4	VAZ-2112	**CL801**	1			
1.6	01.00 -	60	1596	4	VAZ-21114	**CL802**	1			
1.6 16V	10.04 - 12.10	67	1596	4	VAZ-21124	**CL800**	4	CP070	4	pencil
1.6 LPG	10.04 - 03.07	60	1596	4	VAZ-21114	**CL802**	1			
111										
1.5	01.96 -	57	1499	4	VAZ-2111	**CL801**	1			
1.5 16V	10.00 -	67	1499	4	VAZ-2112	**CL801**	1			
1.6	01.05 -	60	1596	4	VAZ-21114	**CL802**	1			
1.6	03.06 -	66	1596	4	VAZ-21124	**CL802**	1			
112										
1.5	01.95 -	57	1499	4	VAZ-2111	**CL801**	1			
1.5 16V	10.00 -	67	1499	4	VAZ-2112	**CL801**	1			
1.6	01.05 -	60	1596	4	VAZ-21114	**CL802**	1			
2107										
1.7	06.02 -	59	1690	4	VAZ-2121.3	**CL801**	1			
Granta (2190)										
1.6	10.11 -	60	1596	4	VAZ-11183	**CL802**	1			
1.6	10.11 -	64	1596	4	VAZ-11186	**CL802**	1			
1.6	10.11 -	72	1596	4	VAZ-21126	**CL800**	4	CP070	4	pencil
1.6	07.13 -	78	1596	4	VAZ-21127	**CL800**	4	CP070	4	pencil
Granta (2349)										
1.6	10.11 -	64	1597	4	VAZ-11186	**CL802**	1			
Kalina Hatchback (1119)										
1.4 16V	11.08 -	66	1390	4	VAZ-11194	**CL800**	4	CP070	4	pencil
1.4 16V LPG	11.08 -	65	1390	4	VAZ-11194	**CL800**	4	CP070	4	pencil
1.6	10.04 -	60	1596	4	VAZ-21114	**CL802**	1			
1.6 16V	10.04 -	66	1596	4		**CL800**	4	CP070	4	pencil
Kalina Hatchback (2192)										
1.6	06.13 -	78	1596	4	VAZ-21127	**CL800**	4	CP070	4	pencil
Kalina Combi (1117)										
1.4 16V	11.08 -	66	1390	4	VAZ-11194	**CL800**	4	CP070	4	pencil
1.4 16V LPG	11.08 -	65	1390	4	VAZ-11194	**CL800**	4	CP070	4	pencil
1.6	10.04 -	60	1596	4	VAZ-21114	**CL802**	1			
Kalina Combi (2194)										
1.6	11.13 -	78	1596	4	VAZ-21127	**CL800**	4	CP070	4	pencil
Kalina Sedan (1118)										
1.4 16V	11.08 -	66	1390	4	VAZ-11194	**CL800**	4	CP070	4	pencil
1.4 16V LPG	11.08 -	65	1390	4	VAZ-11194	**CL800**	4	CP070	4	pencil
1.6	10.04 -	60	1596	4	VAZ-21124/VAZ-21114	**CL802**	1			
1.6 16V	10.04 -	66	1596	4		**CL800**	4	CP070	4	pencil
Largus Combi										
1.6	03.12 -	62	1598	4	VAZ-K7M	**CL116**	1			
1.6	03.12 -	77	1598	4	VAZ- K4M	**CL100**	4			pencil
Largus Van										
1.6	03.12 -	62	1598	4	VAZ-K7M	**CL116**	1			
1.6	03.12 -	77	1598	4	VAZ-K4M	**CL100**	4			pencil
Nadezhda (2120)										
1.7 i	12.97 -	59	1690	4	VAZ-21214	**CL801**	1			
Niva (2121)										
1700 i	06.96 -	59	1690	4	VAZ-21214	**CL802**	1			
1700 i 4x4	09.10 -	61	1690	4	VAZ-21214	**CL802**	1			
1700 i 4x4	10.00 -	60	1690	4	VAZ-21214	**CL802**	1			
Niva II (2123)										
1.7	08.04 -	61	1690	4	VAZ-21214	**CL802**	1			
1.7	09.02 -	59	1690	4	VAZ-21214	**CL802**	1			

LADA (VAZ) Niva II (2123) ▶

model	year	kW	cm³	cyl	engine	coil	pcs	boot	pcs	info
LADA (VAZ)										
Niva II (2123)										
1.7 LPG	09.02 -	57	1690	4	VAZ-21214	**CL802**	1			
Priora CC (2172)										
1.6	12.08 -	60	1596	4	VAZ-21703	**CL802**	1			
1.6	12.08 -	72	1596	4	VAZ-21126	**CL800**	4	CP070	4	pencil
1.6	02.14 -	78	1596	4	VAZ-21127	**CL800**	4	CP070	4	pencil
1.6 LPG	12.08 -	71	1596	4	VAZ-21126	**CL800**	4	CP070	4	pencil
Priora Combi (2171)										
1.6	10.09 -	60	1596	4	VAZ-21703	**CL800**	4	CP070	4	pencil
1.6	10.09 -	72	1596	4	VAZ-21126	**CL800**	4	CP070	4	pencil
1.6	02.14 -	78	1596	4	VAZ-21127	**CL800**	4	CP070	4	pencil
Priora Sedan (2170)										
1.6	12.08 -	60	1596	4	VAZ-21703	**CL802**	1			
1.6	12.08 -	72	1596	4	VAZ-21126	**CL800**	4	CP070	4	pencil
1.6	02.14 -	78	1596	4	VAZ-21127	**CL800**	4	CP070	4	pencil
1.6 LPG	03.09 -	71	1596	4		**CL800**	4	CP070	4	pencil
Samara (2108, 2109, 2115)										
1.5	04.96 -	57	1499	4	VAZ-2111	**CL801**	1			
LANCIA										
Dedra (835)										
1.6 16V	01.96 - 07.99	76	1581	4	182 A4.000	**CL312**	1			
1.6 i.e.	04.93 - 07.99	55	1581	4	835 C1.000	**CL302**	1			
1.6 i.e.	08.89 - 03.93	57	1581	4	835 A1.046	**CL313**	1			
1.6 i.e.	08.89 - 06.94	66	1581	4	835 A1.000	**CL313**	1			
1.6 LE cat	07.94 - 07.99	66	1581	4	159 B9.000	**CL302**	1			
1.8 16V LE	03.96 - 07.99	83	1747	4	182 A2.000	**CL300**	2			twin coil
						CL314	4			pencil
1.8 GT 16V	03.96 - 07.99	96	1747	4	183 A1.000	**CL314**	4			pencil
1.8 i.e.	07.94 - 07.99	74	1756	4	836 A5.000	**CL300**	2			twin coil
Dedra SW (835)										
1.6	10.94 - 07.99	66	1581	4	159 B9.000	**CL302**	1			
1.6 16V	01.96 - 07.99	76	1581	4	182 A4.000	**CL312**	1			
1.8 16V LE	03.96 - 07.99	83	1747	4	182 A2.000	**CL300**	2			twin coil
						CL314	4			pencil
1.8 GT 16V	03.96 - 07.99	96	1747	4	183 A1.000	**CL314**	4			pencil
1.8 i.e.	07.94 - 07.99	74	1756	4	836 A5.000	**CL300**	2			twin coil
Delta I (831AB0)										
1.3	09.79 - 08.92	55	1301	4	831 A2.000/831 B.000	**CL308**	1			
1.5	11.82 - 12.92	63	1498	4	831 A1.000/831 B1.000	**CL308**	1			
2.0 16V HF Evo Integrale	06.93 - 01.94	155	1995	4	831 E5.046/831 E5.000	**CL300**	2			twin coil
Delta II (836)										
1.4 i.e.	10.94 - 08.99	51	1372	4	836 A4.000	**CL302**	1			coil 4xPIN / engine code
				4	160 A1.046	**CL313**	1			coil 1xDIN / engine code
1.6 i.e.	06.93 - 08.99	55	1581	4	835 C1.000	**CL302**	1			
1.6 i.e.	03.96 - 08.99	66	1581	4	182 A6.000	**CL312**	1			
1.6 i.e. 16V	01.96 - 08.99	76	1581	4	182 A4.000	**CL312**	1			
1.8 i.e.	07.94 - 08.99	66	1756	4	835 C4._/836 C4._/836 A6._	**CL300**	2			twin coil
1.8 i.e.	06.93 - 08.99	76	1756	4	835 C2.000	**CL314**	4			year / pencil
	12.94 - 08.99	76	1756	4	835 C2.000	**CL300**	2			year / twin coil
1.8 i.e. 16V	03.96 - 08.99	83	1747	4	182 A2.000	**CL300**	2			twin coil
						CL315	4			pencil
1.8 i.e. 16V GT	03.96 - 08.99	96	1747	4	183 A1.000	**CL300**	2			twin coil
						CL315	4			pencil
2.0 16V Turbo	06.93 - 08.99	137	1995	4	836 A2.000	**CL300**	2			twin coil
2.0 16V Turbo	07.96 - 08.99	142	1995	4	175 A4.000	**CL300**	2			twin coil
Delta III (844)										
1.4	09.08 -	88	1368	4	198 A4.000	**CL323**	4			pencil
1.4 16V	07.10 -	103	1368	4	198 A7.000	**CL326**	4			pencil
1.8	01.09 -	147	1742	4	939 B1.000	**CL323**	4			pencil
Kappa (838A)										
2.0 16V Turbo	02.95 - 10.01	151	1995	4	838 A4.000	**CL302**	1			
2.0 20V	10.94 - 10.01	107	1998	5	838 A1.000	**CL317**	5			pencil
2.0 20V	07.96 - 10.01	114	1998	5	838 A6.000	**CL317**	5			pencil OEM No. 46403328
						CL318	5			pencil OEM No. 46467542
2.0 20V Turbo	06.98 - 10.01	162	1998	5	175 A3.000	**CL317**	5			pencil
2.4 20V	08.94 - 10.01	129	2446	5	838 A2.000/838 A2.027	**CL317**	5			pencil OEM No. 46403328
						CL318	5			pencil OEM No. 46467542
3.0 24V	08.94 - 10.01	150	2959	6	838 B.000	**CL320**	6			pencil
Kappa Coupe (838)										
2.0 16V Turbo	11.96 - 03.01	151	1995	4	838 A4.000	**CL302**	1			
2.0 20V	07.96 - 03.01	114	1998	5	838 A6.000	**CL317**	5			pencil
2.0 20V Turbo	06.98 - 03.01	162	1998	5	175 A3.000	**CL317**	5			pencil

LANCIA Kappa Coupe (838) ▶

model	year	kW	cm³	cyl	engine	coil	pcs	boot	pcs	info
LANCIA										
Kappa Coupe (838)										
2.4 20V	11.96 - 03.01	129	2446	5	838 A2.000	**CL317**	5			pencil
3.0 24V	11.96 - 03.01	150	2959	6	838 B.000	**CL320**	6			pencil
Kappa SW (838B)										
2.0 16V Turbo	07.96 - 10.01	151	1995	4	838 A4.000	**CL302**	1			
2.0 20V	07.96 - 10.01	114	1998	5	838 A6.000	**CL317**	5			pencil OEM No. 46403328
						CL318	5			pencil OEM No. 46467542
2.0 20V Turbo	06.98 - 10.01	162	1998	5	175 A3.000	**CL317**	5			pencil
2.4 20V	07.96 - 10.01	129	2446	5	838 A2.000	**CL317**	5			pencil OEM No. 46403328
						CL318	5			pencil OEM No. 46467542
3.0 24V	07.96 - 10.01	150	2959	6	838 B.000	**CL320**	6			pencil
Lybra (839AX)										
1.6 16V	07.99 - 10.05	76	1581	4	182 A4.000	**CL312**	1			
1.8 16V	07.99 - 10.05	96	1747	4	839 A7._/839 A9._/839 A4._	**CL315**	4			pencil
2.0 20V	07.99 - 09.00	113	1998	5	182 B7.000	**CL318**	5			pencil
2.0 20V	09.00 - 10.05	110	1998	5	185 A8.000	**CL318**	5			pencil
Lybra SW (839BX)										
1.6 16V	07.99 - 10.05	76	1581	4	182 A4.000	**CL312**	1			
1.8 16V	07.99 - 10.05	96	1747	4	839 A7.000/839 A4.000	**CL315**	4			pencil
2.0 20V	09.00 - 10.05	110	1998	5	185 A8.000	**CL318**	5			pencil
2.0 20V	07.99 - 09.00	113	1998	5	182 B7.000	**CL318**	5			pencil
Musa (350)										
1.4	09.05 -	57	1368	4	350 A1.000	**CL309**	1			
1.4	10.07 -	66	1368	4	192 B2.000	**CL310**	4	CP072	4	pencil
1.4	10.04 -	70	1368	4	843 A 1.000	**CL310**	4	CP072	4	pencil
1.4 LPG	11.10 -	57	1368	4	350 A1.000	**CL309**	1			
Phedra (179)										
3.0 V6	09.02 - 11.10	150	2946	6	ES9 J4S	**CL135**	6			pencil
Thema (834)										
2000 16V	08.92 - 12.93	112	1995	4	834 F1.000	**CL302**	1			
2000 16V Turbo	12.88 - 06.90	133	1995	4	834 C1.000	**CL300**	2			twin coil
2000 16V Turbo	10.92 - 07.94	148	1995	4	834 F2.000	**CL302**	1			
2000 i.e.	09.88 - 05.92	86	1995	4	834 B1.000	**CL313**	1			
2000 i.e.	03.86 - 09.88	83	1995	4	834 B.048	**CL313**	1			
2000 i.e.	09.87 - 05.92	85	1995	4	834 B.146	**CL302**	1			coil 4xPIN
						CL313	1			coil 1xDIN
2000 i.e.Turbo	07.86 - 05.90	110	1995	4	834 C.146	**CL313**	1			
2000 i.e. 16V	02.89 - 05.92	104	1995	4	834 B2.246	**CL300**	2			twin coil
2000 i.e. 16V Turbo	04.89 - 05.92	130	1995	4	834 C1.246	**CL300**	2			twin coil
Thema SW (834)										
2000 Turbo	01.89 - 03.92	110	1995	4	834 C.146	**CL313**	1			
2000 16V	05.92 - 07.94	112	1995	4	834 F1.000	**CL302**	1			
2000 Turbo 16V	11.92 - 07.94	148	1995	4	834 F2.000	**CL302**	1			
2000 i.e. 16V	02.89 - 05.92	104	1995	4	834 B2.246	**CL300**	2			twin coil
2000 i.e. 16V Turbo	04.89 - 03.93	130	1995	4	834 C1.246	**CL300**	2			twin coil
2000 i.e. 16V Turbo	12.88 - 06.90	133	1995	4	834 C1.000	**CL300**	2			twin coil
Thesis (841AX)										
2.0 Turbo	07.02 - 07.09	136	1998	5	841 E.000	**CL318**	5			pencil
2.4	07.02 - 07.09	125	2446	5	841 D.000	**CL318**	5			pencil
3.0 V6	07.02 - 07.09	158	2959	6	841 A.000	**CL320**	6			pencil
3.2 V6	05.03 - 07.09	169	3179	6	841 L.000	**CL320**	6			pencil
Y (840A)										
1.1	11.95 - 09.03	40	1108	4	176 B2.000	**CL300**	2			twin coil
1.2	03.96 - 09.03	44	1242	4	840 A3.000/188 A4.000	**CL300**	2			twin coil
1.2 16V	10.00 - 09.03	59	1242	4	188 A5.000	**CL302**	1			
1.2 16V	04.97 - 09.03	63	1242	4	176 B9.000	**CL300**	2			twin coil
1.4 12V	03.96 - 09.03	55	1370	4	840 A4.000	**CL302**	1			
1.4 12V	10.96 - 09.03	59	1370	4	840 A2.000	**CL302**	1			
Y10 (156)										
1.0 Fire	06.85 - 06.91	32	999	4	156 A2.100	**CL304**	1			
1.0 Fire	03.85 - 06.89	33	999	4	156 A2.000	**CL304**	1			
1.0 Fire cat	10.87 - 02.92	33	999	4	156 A2.246	**CL304**	1			
1.0 Fire Allrad	12.86 - 02.89	32	999	4	156 A2.100	**CL304**	1			
1.1 Avenue	01.95 - 12.95	40	1108	4	176 B2.000	**CL302**	1			
1.1 Avenue Allrad	01.95 - 12.95	40	1108	4	176 B2.000	**CL302**	1			
1.1 i.e	08.89 - 06.92	42	1108	4	156 C.000	**CL308**	1			
1.1 i.e Allrad	08.89 - 06.92	42	1108	4	156 C.000	**CL308**	1			
1.1 i.e. Fire	07.89 - 09.92	37	1108	4	156 C.046	**CL304**	1			year / with distributor
	10.92 - 09.95	37	1108	4	156 C.046	**CL302**	1			year / without distributor
1.1 i.e. Fire Allrad	09.92 - 12.95	37	1108	4	156 C.046	**CL302**	1			without distributor
						CL304	1			with distributor

LANCIA Y10 (156) ▶

model	year	kW	cm³	cyl	engine	coil	pcs	boot	pcs	info
LANCIA										
Y10 (156)										
1.3 i.e. Fire	02.89 - 12.95	53	1297	4	156 B.000/146 A 5.046	**CL303**	1			coil socket 4x flat connector
	09.92 - 12.95	53	1297	4	156 B.000/146 A 5.046	**CL313**	1			year / coil socket with 4 pins
Ypsilon (843)										
1.2	10.03 - 12.11	44	1242	4	188 A4.000	**CL300**	2			twin coil
1.2	08.10 - 12.11	51	1242	4	169 A4.000	**CL309**	1			
1.2	10.03 - 12.11	59	1242	4	188 A5.000	**CL310**	4	CP072	4	pencil
1.4	02.06 - 12.11	57	1368	4	350 A1.000	**CL309**	1			
1.4 16V	10.03 - 12.11	70	1368	4	843 A 1.000	**CL310**	4	CP072	4	pencil
1.4 LPG	11.10 - 12.11	57	1368	4	350 A1.000	**CL309**	1			
Ypsilon (312, 846)										
0.9 CNG	05.11 -	63	875	2	312 A2.000	**CL325**	2			pencil
0.9 Twinair	05.11 -	63	875	2	312 A2.000	**CL325**	2			pencil
1.2	05.11 -	51	1242	4	169 A4.000	**CL309**	1			
1.2 BiFuel	05.11 -	49	1242	4	169 A4.000	**CL309**	1			
1.2 BiFuel	05.11 -	51	1242	4	169 A4.000	**CL309**	1			
Zeta (220)										
2.0 16V	07.00 - 09.02	100	1997	4	RFN	**CL107**	1			
2.0 Turbo	05.95 - 09.02	108	1998	4	RGX (XU10J2TE)	**CL107**	1			
LANDROVER										
Discovery II (LJ, LT)										
4.0 V8 4x4	11.98 - 06.04	136	3950	8	56 D	**CL302**	2			
Freelander (LN)										
1.8 16V 4x4	11.00 - 10.06	86	1796	4	18 K4F	**CL711**	2			semidirect / pencil
2.5 V6 4x4	11.00 - 10.06	130	2497	6	25 K4F	**CL702**	6			pencil
Freelander 2 (FA_)										
2.0 Si4 4x4	10.11 - 10.14	177	1999	4	204PT	**CL415**	4			pencil
3.2 4x4	10.06 - 10.14	171	3192	6	B 6324 S	**CL723**	6			pencil
Freelander Soft Top										
1.8 i 16V 4x4	02.98 - 10.06	88	1796	4	18 K4F	**CL711**	2			semidirect / pencil
Range Rover II (LP)										
3.9 4x4	07.94 - 03.02	140	3947	8	42 D	**CL302**	2			
4.0 4x4	06.98 - 03.02	136	3947	8	42 D	**CL302**	2			
4.6 4x4	06.98 - 03.02	160	4554	8	60 D	**CL302**	2			
4.6 4x4	07.94 - 03.02	165	4553	8	46 D	**CL302**	2			
4.6 4x4	09.96 - 03.02	168	4554	8	46 D	**CL302**	2			
Range Rover III (LM)										
4.4 4x4	03.02 - 08.12	210	4398	8	M62 B44	**CL600**	8	CP003	8	pencil
Range Rover Evoque (LV)										
2.0 4x4	06.11 -	177	1999	4	204PT	**CL415**	4			pencil
LEXUS										
ES (F1, F2)										
250	12.89 - 09.91	118	2507	6	2VZ-FE	**CL574**	1			
ES (AVV6_, GSV6_, ASV6_)										
250	06.12 -	135	2494	4	2AR-FE	**CL924**	4	CP041	4	pencil
300h	06.12 -	118	2494	4	2AR-FXE	**CL924**	4	CP041	4	pencil
GS (UZS161, JZS160)										
430	11.00 - 03.05	208	4293	8	3UZ-FE	**CL575**	8	CP041	8	pencil
GS (GRS19_, UZS19_, GWS19_)										
3.0	04.05 - 11.11	170	2995	6	3GR-FE	**CL924**	6	CP041	6	pencil
300	04.05 - 11.11	183	2995	6	3GR-FSE	**CL924**	6	CP041	6	pencil
350 AWD	05.08 - 11.11	232	3456	6	2GR-FSE	**CL924**	6	CP041	6	pencil
450h	02.06 - 11.11	218	3456	6	2GR-FSE	**CL924**	6	CP041	6	pencil
450h	02.06 - 11.11	254	3456	6	2GR-FSE	**CL924**	6	CP041	6	pencil
GS (GRL1_, GWL1_)										
250	01.12 -	154	2499	6	4GR-FSE	**CL924**	6	CP041	6	pencil
350	01.12 -	234	3456	6	2GR-FSE	**CL924**	6	CP041	6	pencil
300h	10.13 -	133	2494	4	2AR-FSE	**CL924**	4	CP041	4	pencil
350 AWD	01.12 -	234	3456	6	2GR-FSE	**CL924**	6	CP041	6	pencil
GX (URJ15_)										
460	11.09 -	218	4608	8	1UR-FE	**CL924**	8	CP041	8	pencil
IS I (JCE1_, GXE1_)										
200	04.99 - 07.05	114	1988	6	1G-FE	**CL575**	6	CP041	6	pencil
IS II (GSE2_, ALE2_, USE2_)										
250 (GSE20)	10.05 -	153	2499	6	4GR-FSE	**CL924**	6	CP041	6	pencil
250 AWD	10.05 -	153	2499	6	4GR-FSE	**CL924**	6	CP041	6	pencil
IS III (GSE3_, AVE3_)										
300h	04.13 -	133	2494	4	2AR-FSE	**CL924**	4	CP041	4	pencil
250	04.13 -	153	2499	6	4GR-FSE	**CL924**	6	CP041	6	pencil
IS C (GSE2_)										
250	04.09 -	153	2499	6	4GR-FSE	**CL924**	6	CP041	6	pencil

model	year	kW	cm³	cyl	engine	coil	pcs	boot	pcs	info
LEXUS										
IS SportCross										
200	10.02 - 10.05	114	1988	6	1G-FE	**CL575**	6	CP041	6	pencil
LS (UCF10)										
400	12.89 - 12.94	180	3969	8	1UZ-FE	**CL578**	2			
LS (UCF20)										
400	12.94 - 08.97	194	3969	8	1UZ-FE	**CL578**	2			
400	09.98 - 10.00	203	3969	8	1UZ-FE	**CL578**	2			
400	09.97 - 10.00	209	3969	8	1UZ-FE	**CL578**	2			
LS (UCF30)										
430	10.00 - 08.06	207	4293	8	3UZ-FE	**CL575**	8	CP041	8	pencil
LS (UVF4_, USF4_)										
460	05.08 -	255	4608	8	1UR-FE	**CL924**	8	CP041	8	pencil
460	04.06 -	280	4608	8	1UR-FSE	**CL924**	8	CP041	8	pencil
460	09.12 -	285	4608	8	1UR-FSE	**CL924**	8	CP041	8	pencil
460 AWD	12.08 -	270	4608	8	1UR-FSE	**CL924**	8	CP041	8	pencil
460 AWD	09.12 -	272	4608	8	1UR-FSE	**CL924**	8	CP041	8	pencil
600h	08.07 -	290	4969	8	2UR-FSE	**CL924**	8	CP041	8	pencil
LX (URJ201)										
570	11.07 -	270	5663	8	3UR-FE	**CL924**	8	CP041	8	pencil
RX (MCU15)										
300 AWD	10.00 - 05.03	148	2995	6	1MZ-FE	**CL571**	6	CP041	6	pencil
RX (MHU3_, GSU3_, MCU3_)										
300	05.03 - 12.08	150	2995	6	1MZ-FE	**CL571**	6	CP041	6	pencil
350 AWD	02.06 - 12.08	203	3456	6	2GR-FE	**CL920**	6	CP044	6	pencil
400h	09.05 - 12.08	155	3311	6	3MZ-FE	**CL921**	6			pencil
400h AWD	09.04 - 12.08	155	3311	6	3MZ-FE	**CL921**	6			pencil
RX (GYL1_, GGL15, AGL10)										
270	12.08 -	138	2671	4	1AR-FE	**CL924**	4	CP041	4	pencil
350 AWD	12.08 -	204	3456	6	2GR-FE	**CL920**	6	CP044	6	pencil
450h	12.08 -	183	3456	6	2GR-FXE	**CL920**	6	CP044	6	pencil
450h AWD	12.08 -	183	3456	6	2GR-FXE	**CL920**	6	CP044	6	pencil
SC (UZZ40_)										
430	05.01 - 07.10	210	4293	8	3UZ-FE	**CL575**	8	CP041	8	pencil
MAZDA										
121 I (DA)										
1.1	10.87 - 10.90	42	1139	4	B1/B116	**CL507**	1			
1.3	04.89 - 10.90	40	1324	4	B3	**CL507**	1			
1.3	10.87 - 11.90	44	1324	4	B3	**CL507**	1			
121 II (DB)										
1.1	11.90 - 10.93	40	1138	4	B1	**CL507**	1			
1.3 16V	11.90 - 10.93	39	1324	4	B3 (16V)	**CL507**	1			
1.3 i 16V	11.90 - 10.93	53	1324	4	B3 (16V)	**CL507**	1			
121 III (JASM, JBSM)										
1.25	03.96 - 04.03	55	1242	4	DHG/DHF	**CL400**	1			DIN
						CL401	1			PIN
1.3	03.96 - 04.03	37	1299	4	JJM/JJK	**CL400**	1			DIN
						CL401	1			PIN
1.3	03.96 - 04.03	44	1299	4	J4R/J4T	**CL400**	1			DIN
						CL401	1			PIN
2 (DY)										
1.25	04.03 - 02.05	55	1242	4	FUJA	**CL401**	1			year
	02.05 -	55	1242	4	FUJA	**CL403**	1			year
1.4	04.03 - 02.05	59	1388	4	FXJA	**CL401**	1			year
	02.05 -	59	1388	4	FXJA	**CL403**	1			year
1.6	04.03 - 02.05	74	1596	4	FYJA	**CL401**	1			year
	02.05 -	74	1596	4	FYJA	**CL403**	1			year
2 (DE)										
1.3	10.07 -	55	1349	4	ZJ-VE	**CL905**	4			pencil
1.3	10.07 -	63	1349	4	ZJ-VE	**CL905**	4			pencil
1.4 MZR-CD	01.08 -	50	1399	4	Y404	**CL905**	4			pencil
1.5	10.07 -	76	1498	4	ZY-DE/ZY-VE	**CL905**	4			pencil
3 (BK)										
1.4	10.03 - 06.09	62	1349	4	ZJ-VE	**CL910**	4			pencil
1.6	10.03 - 06.09	77	1598	4	B6ZE	**CL910**	4			pencil
2.0	10.03 - 06.09	110	1999	4	LF17	**CL405**	4	CP048	4	year / pencil
	03.06 - 06.09	110	1999	4	LF17	**CL599**	4	CP047	4	year / pencil
2.3 MPS Turbo	12.06 - 06.09	191	2261	4	L3-VDT/L3N9	**CL599**	4	CP047	4	pencil
3 (BL)										
1.6 MZR	06.09 -	77	1598	4	Z6	**CL905**	4			pencil
1.6 MZR	01.10 - 12.13	79	1598	4	Z6	**CL905**	4			pencil
1.6 MZR CD	11.10 -	85	1560	4	Y655/Y650	**CL905**	4			pencil
2.0 MZR	06.09 -	110	1999	4	LF17/LF-DE	**CL599**	4	CP047	4	pencil

MAZDA 3 (BL) ▶

model	year	kW	cm³	cyl	engine	coil	pcs	boot	pcs	info
MAZDA										
3 (BL)										
2.0 MZR DISI	06.09 -	111	1999	4	LF5W/LF5H	**CL599**	4	CP047	4	pencil
3 (BM)										
1.6	09.13 -	77	1598	4	Z6Y1	**CL905**	4			pencil
3 Sedan (BK)										
1.6	02.04 -	77	1598	4	Z6	**CL905**	4			pencil
2.0	02.04 -	110	1999	4	LF17	**CL405**	4	CP048	4	year / pencil
	03.06 -	110	1999	4	LF17	**CL599**	4	CP047	4	year / pencil
3 Sedan (BL)										
1.6 MZR	06.09 -	77	1598	4	Z6	**CL905**	4			pencil
2.0 MZR	06.09 -	110	1999	4	LF17/LF-DE	**CL599**	4	CP047	4	pencil
2.0 MZR DISI	06.09 -	111	1999	4	LF5W/LF5H	**CL599**	4	CP047	4	pencil
3 Sedan (BM)										
1.6	09.13 -	77	1598	4	Z6Y3/Z6Y1	**CL905**	4			pencil
323 III (BF)										
1.3	08.85 - 05.89	44	1296	4	E3	**CL559**	1			
1.4	04.87 - 07.89	44	1324	4	B3	**CL507**	1			
1.6 GT	11.86 - 10.89	63	1597	4	B6 (SOHC)	**CL559**	1			
1.6 GT Turbo	10.85 - 11.91	103	1598	4	B6T	**CL559**	1			
323 III Hatchback (BF)										
1.3	09.85 - 12.87	44	1296	4	E3	**CL559**	1			
1.4	09.87 - 10.89	44	1324	4	B3	**CL507**	1			
1.6 GT	09.87 - 10.89	63	1597	4	B6 (SOHC)	**CL559**	1			
1.6 GT Turbo	10.85 - 08.93	103	1598	4	B6T	**CL559**	1			
1.6 GT Turbo 4WD	10.87 - 11.91	103	1598	4	B6T	**CL559**	1			
323 III Station Wagon (BW)										
1.6	09.86 - 10.95	63	1598	4	B6 (SOHC)/B65M /B6E	**CL507**	1			
1.6 4x4	05.90 - 03.93	63	1598	4	B65M /B6E	**CL507**	1			
323 C IV (BG)										
1.3	09.89 - 07.94	49	1324	4	B3E	**CL507**	1			
1.3 16V	09.89 - 07.94	54	1324	4	B3 (16V)	**CL507**	1			coil socket with 4 pins
	04.91 - 07.94	54	1324	4	B3 (16V)	**CL506**	1			coil socket with 2 pins
1.6	09.89 - 06.91	62	1598	4	B6E	**CL507**	1			
1.6 16V	03.91 - 10.94	65	1598	4	B6	**CL507**	1			
1.8 16V	09.89 - 03.93	103	1840	4	BP22/BP31	**CL506**	1			
1.8 16V 4WD	11.91 - 12.93	76	1840	4	BP	**CL506**	1			
1.8 16V GT	09.89 - 03.93	94	1840	4	BP (DOHC)	**CL506**	1			
1.8 16V Turbo 4WD	09.90 - 12.92	120	1840	4	BP Turbo	**CL506**	1			
1.8 16V Turbo 4WD	01.93 - 07.94	136	1840	4	BP Turbo	**CL506**	1			
323 C V (BA)										
1.3 16V	08.94 - 09.98	54	1324	4	B3 (16V)	**CL507**	1			
323 F IV (BG)										
1.6	09.89 - 06.91	62	1598	4	B6E	**CL506**	1			coil socket with 2 pins
						CL507	1			coil socket with 4 pins
1.6 16V	03.91 - 10.94	65	1598	4	B6	**CL506**	1			coil socket with 2 pins
						CL507	1			coil socket with 4 pins
1.8 4WD	01.91 - 04.94	76	1840	4	BPC	**CL506**	1			
1.8 16V	08.89 - 07.94	76	1840	4	BP	**CL506**	1			
1.8 16V	09.89 - 03.93	103	1840	4	BP31	**CL506**	1			
1.8 16V GT	08.89 - 07.94	94	1840	4	BP (DOHC)	**CL506**	1			
323 F VI (BJ)										
1.5 16V	09.98 - 01.01	65	1498	4	ZL06/ZL05	**CL594**	2	CP046	2	semidirect / pencil
1.6	01.01 - 05.04	70	1598	4	ZM	**CL594**	2	CP046	2	semidirect / pencil
1.6	01.01 - 05.04	72	1598	4	ZM	**CL594**	2	CP046	2	semidirect / pencil
1.9 16V	09.98 - 01.01	84	1840	4	FP /FP55	**CL572**	2	CP045	2	semidirect / pencil
2.0	01.01 - 05.04	96	1991	4	FS7G/FS7E	**CL572**	2	CP045	2	semidirect / pencil
323 S IV (BG)										
1.3	09.89 - 06.91	49	1324	4	B3E/B383	**CL507**	1			
1.3 16V	04.91 - 07.94	54	1324	4	B3 (16V)	**CL506**	1			coil socket with 2 pins
			1324	4		**CL507**	1			coil socket with 4 pins
1.6	09.89 - 06.91	62	1598	4	B6E	**CL506**	1			coil socket with 2 pins
			1598	4		**CL507**	1			coil socket with 4 pins
1.6 16V	08.89 - 10.94	65	1598	4	B6	**CL506**	1			coil socket with 2 pins
			1598	4		**CL507**	1			coil socket with 4 pins
1.8 16V	08.89 - 07.94	76	1840	4	BP52	**CL506**	1			
1.8 16V 4WD	09.91 - 07.94	76	1840	4	BP52	**CL506**	1			
1.8 16V GT	06.89 - 07.94	94	1840	4	BP (DOHC)	**CL506**	1			
1.8 16V Turbo 4WD	01.91 - 07.94	120	1840	4	BP Turbo	**CL506**	1			
323 S V (BA)										
1.3 16V	08.94 - 09.98	54	1324	4	B3 (16V)	**CL507**	1			
323 S VI (BJ)										
1.5 16V	09.98 - 01.01	65	1498	4	ZL06/ZL05	**CL594**	2	CP046	2	semidirect / pencil

MAZDA 323 S VI (BJ) ▶

model	year	kW	cm³	cyl	engine	coil	pcs	boot	pcs	info
MAZDA										
323 S VI (BJ)										
1.6	01.01 - 05.04	70	1598	4	ZM	**CL594**	2	CP046	2	semidirect / pencil
1.6	01.01 - 05.04	72	1598	4	ZM	**CL594**	2	CP046	2	semidirect / pencil
1.9 16V	09.98 - 05.04	84	1840	4	FP /FP55	**CL572**	2	CP045	2	semidirect / pencil
2.0	01.01 - 05.04	96	1991	4	FS7G/FS7E	**CL572**	2	CP045	2	semidirect / pencil
6 (GG)										
1.8	08.02 - 08.07	88	1798	4	L813	**CL906**	1			
2.0	06.02 - 08.07	104	1999	4	LF18/LF17	**CL906**	1			
2.3	06.02 - 08.07	122	2261	4	L3C1	**CL906**	1			
6 (GH)										
2.0 MZR	08.07 -	108	1999	4	LF17	**CL599**	4	CP047	4	pencil
2.0 MZR	01.10 -	114	1999	4	LF-DE	**CL599**	4	CP047	4	pencil
2.5 MZR	08.07 -	125	2488	4	L5-VE	**CL599**	4	CP047	4	pencil
6 CC (GH)										
2.0 MZR	08.07 -	108	1999	4	LF17	**CL599**	4	CP047	4	pencil
2.0 MZR	01.10 -	114	1999	4	LF-DE	**CL599**	4	CP047	4	pencil
2.5 MZR	08.07 -	125	2488	4	L5-VE	**CL599**	4	CP047	4	pencil
6 Combi (GH)										
2.0 MZR	02.08 -	108	1999	4	LF17	**CL599**	4	CP047	4	pencil
2.0 MZR	01.10 -	114	1999	4	LF-DE	**CL599**	4	CP047	4	pencil
2.5 MZR	02.08 -	125	2488	4	L5-VE	**CL599**	4	CP047	4	pencil
6 Hatchback (GG)										
1.8	08.02 - 08.07	88	1798	4	L813	**CL906**	1			
2.0	08.02 - 08.07	104	1999	4	LF18/LF17	**CL906**	1			
2.3	08.02 - 08.07	122	2261	4	L3C1	**CL906**	1			
6 Station Wagon (GY)										
1.8	08.02 - 08.07	88	1798	4	L813	**CL906**	1			
2.0	08.02 - 08.07	104	1999	4	LF18/LF17	**CL906**	1			
2.0	03.05 - 08.07	108	1999	4	LFF7	**CL599**	4	CP047	4	pencil
2.3	08.02 - 08.07	122	2261	4	L3C1	**CL906**	1			
2.3 AWD	11.02 - 08.07	119	2261	4	L3C1	**CL906**	1			
626 III (GD)										
2.0	09.87 - 10.90	66	1998	4	FE (12V)	**CL559**	1			
2.0 12V	09.87 - 05.92	79	1998	4	FE (12V)	**CL559**	1			
2.0 16V	11.87 - 05.92	103	1998	4	FE (16V)	**CL559**	1			
2.0 16V	07.87 - 09.89	109	1998	4	FE (16V)	**CL559**	1			
2.2 12V	11.87 - 07.91	85	2184	4	F2	**CL559**	1			
2.2 12V 4WD	01.90 - 05.92	85	2184	4	F2	**CL559**	1			
626 III Coupe (GD)										
2.0 12V	09.87 - 12.88	79	1998	4	FE (12V)	**CL559**	1			
2.0 16V	12.87 - 10.90	103	1998	4	FE (16V)	**CL559**	1			
2.0 16V	06.87 - 09.89	109	1998	4	FE (16V)	**CL559**	1			
2.2 12V	04.88 - 12.91	85	2184	4	F2	**CL559**	1			
626 III Hatchback (GD)										
2.0	09.87 - 10.90	66	1998	4	FE (8V)	**CL559**	1			
2.0 12V	11.87 - 05.92	79	1998	4	FE (12V)	**CL559**	1			
2.0 16V	11.87 - 10.90	103	1998	4	FE (16V)	**CL559**	1			
2.0 16V	06.87 - 08.89	109	1998	4	FE (16V)	**CL559**	1			
2.2 12V	06.88 - 04.92	85	2184	4	F2	**CL559**	1			
2.2 12V 4WD	11.87 - 07.90	85	2184	4	F2	**CL559**	1			
626 III Station Wagon (GV)										
2.0	10.88 - 09.97	66	1998	4	FE (8V)	**CL559**	1			
2.0 16V	01.88 - 03.92	103	1998	4	FE (16V)	**CL559**	1			
2.2 12V	03.89 - 11.96	85	2184	4	F2	**CL559**	1			
2.2 12V 4WD	05.91 - 11.92	85	2184	4	F2L1/F2	**CL559**	1			
626 V (GF)										
1.8	05.97 - 12.99	66	1840	4	FPY3	**CL400**	1			
1.8	12.99 - 10.02	74	1840	4	FP9A	**CL400**	1			
2.0	05.97 - 10.02	85	1991	4	FS	**CL400**	1			
2.0	04.98 - 10.02	100	1991	4	FS2C	**CL400**	1			
626 V Hatchback (GF)										
1.8	05.97 - 12.99	66	1840	4	FPY3	**CL400**	1			
1.8	12.99 - 10.02	74	1840	4	FP	**CL400**	1			
2.0	05.97 - 10.02	85	1991	4	FS	**CL400**	1			
2.0 H.P.	02.98 - 10.02	100	1991	4	FS2C	**CL400**	1			
626 V Station Wagon (GW)										
1.8	02.98 - 01.00	66	1840	4	FPY3	**CL400**	1			
1.8	01.00 - 10.02	74	1840	4	FP9A	**CL400**	1			
2.0	02.98 - 10.02	85	1991	4	FS	**CL400**	1			
2.0 H.P.	02.98 - 10.02	100	1991	4	FS2C	**CL400**	1			
929 III (HC)										
2.0	06.87 - 12.88	85	1998	4	FEFA/FE (8V)	**CL559**	1			

MAZDA 929 III (HC) ▶

model	year	kW	cm³	cyl	engine	coil	pcs	boot	pcs	info
MAZDA										
929 III (HC)										
2.2 12V	01.88 - 04.89	85	2184	4	F21/F2E/F2	**CL559**	1			
2.2 12V	04.89 - 06.91	94	2184	4	F2-C	**CL559**	1			
2.2 i	05.87 - 12.88	100	2184	4	F2-EGI	**CL559**	1			
3.0	01.88 - 12.89	125	2954	6	JE3	**CL559**	1			
3.0	06.87 - 06.91	140	2954	6	JE	**CL559**	1			
3.0 i	01.90 - 06.91	123	2954	6	JE3	**CL559**	1			
CX-7 (ER)										
2.3 MZR DISI Turbo	11.06 -	175	2261	4	L3Y7	**CL599**	4	CP047	4	pencil
2.3 MZR DISI Turbo	10.07 -	190	2261	4	L3-VDT	**CL599**	4	CP047	4	pencil
2.3 MZR DISI Turbo	09.09 -	191	2261	4	L3-VDT	**CL599**	4	CP047	4	pencil
MPV II (LW)										
2.3	07.02 - 02.06	104	2261	4	L3	**CL906**	1			
MX-3 (EC)										
1.6 i	07.91 -	65	1598	4	B69	**CL506**	1			
1.6 i	01.94 -	79	1598	4	B6D	**CL573**	1			
MX-5 I (NA)										
1.6	01.95 - 04.98	66	1598	4	8AN1	**CL573**	1			
1.6	05.90 - 01.94	85	1598	4	B64F	**CL573**	1			
MX-5 III (NC)										
2.0	09.08 -	118	1999	4	LF62/LF-DE	**CL599**	4	CP047	4	pencil
Premacy (CP)										
1.9	07.99 - 03.05	74	1840	4	FP	**CL572**	2	CP045	2	semidirect / pencil
1.9	07.99 - 03.05	84	1840	4	FP	**CL572**	2	CP045	2	semidirect / pencil
2.0	11.01 - 03.05	96	1991	4	FS7G/FS7E	**CL572**	2	CP045	2	semidirect / pencil
Tribute (EP)										
2.0	03.00 - 05.08	91	1989	4	YF	**CL401**	1			
2.0 4WD	03.00 - 05.08	91	1989	4	YF	**CL401**	1			
2.3 AWD	04.04 - 05.08	110	2261	4	L3-VE	**CL405**	4	CP048	4	pencil
MERCEDES										
190 (W201)										
E 1.8	04.90 - 08.93	80	1797	4	M 102.910	**CL609**	1			
E 2.0	10.82 - 06.93	90	1996	4	M 102.961/M 102.962	**CL609**	1			
E 2.3	10.86 - 08.93	100	2298	4	M 102.985	**CL609**	1			
E 2.3-16	09.85 - 12.87	125	2298	4	M 102.983	**CL609**	1			coil OEM No. 0001584503
						CL614	1			coil OEM No. 0001585003
E 2.3-16	09.85 - 08.88	130	2298	4	M 102.983	**CL609**	1			coil OEM No. 0001584503
						CL614	1			coil OEM No. 0001585003
E 2.3-16	04.84 - 01.87	136	2298	4	M 102.983	**CL609**	1			coil OEM No. 0001584503
						CL614	1			coil OEM No. 0001585003
E 2.5-16	03.89 - 08.93	143	2498	4	M 102.991	**CL609**	1			coil OEM No. 0001584503
						CL614	1			coil OEM No. 0001585003
E 2.5-16	09.88 - 08.93	150	2498	4	M 102.990	**CL609**	1			coil OEM No. 0001584503
						CL614	1			coil OEM No. 0001585003
E 2.6	09.86 - 08.93	118	2597	6	M 103.942	**CL609**	1			
E Evolution II 2.5	05.90 - 08.93	173	2498	4	M 102.992	**CL609**	1			coil OEM No. 0001584503
						CL614	1			coil OEM No. 0001585003
A-Class (W168)										
A 140	07.97 - 08.04	60	1397	4	M 166.940	**CL610**	1			rail coil
A 140	01.01 - 08.04	60	1598	4	M 166.960	**CL610**	1			rail coil
A 160	07.97 - 08.04	75	1598	4	M 166.960	**CL610**	1			rail coil
A 190	03.99 - 08.04	92	1898	4	M 166.990	**CL610**	1			rail coil
A 210	03.02 - 08.04	103	2084	4	M 166.995	**CL610**	1			rail coil
A-Class (W169)										
A 150	09.04 - 06.12	70	1498	4	M 266.920	**CL605**	2			twin coil
A 160	04.09 - 06.12	70	1498	4	M 266.920	**CL605**	2			twin coil
A 170	09.04 - 06.12	85	1699	4	M 266.940	**CL605**	2			twin coil
A 180	04.09 - 06.12	85	1699	4	M 266.940	**CL605**	2			twin coil
A 200	09.04 - 06.12	100	2034	4	M 266.960	**CL605**	2			twin coil
A 200 Turbo	09.05 - 06.12	142	2034	4	M 266.980	**CL605**	2			twin coil
B-Class (W245)										
B 150	03.05 - 11.11	70	1498	4	M 266.920	**CL605**	2			twin coil
B 160	04.09 - 11.11	70	1498	4	M 266.920	**CL605**	2			twin coil
B 170	03.05 - 11.11	85	1699	4	M 266.940	**CL605**	2			twin coil
B 180	04.09 - 11.11	85	1699	4	M 266.940	**CL605**	2			twin coil
B 200	03.05 - 11.11	100	2034	4	M 266.960	**CL605**	2			twin coil
B 200 Turbo	03.05 - 11.11	142	2034	4	M 266.980	**CL605**	2			twin coil
Cabriolet (A124)										
300 CE-24	04.92 - 06.93	162	2960	6	M 104.980	**CL612**	1			

model	year	kW	cm³	cyl	engine	coil	pcs	boot	pcs	info
MERCEDES										
C-Class (W202)										
C 180	03.93 - 08.95	90	1799	4	M 111.920	**CL611**	2			year / engine code / coil 2xPIN
	09.95 - 05.00	90	1799	4	M 111.921	**CL604**	2	CP004	2	semidirect / coil with COP boot
	09.95 - 05.00	90	1799	4	M 111.921	**CL606**	2	CP004	2	semidirect / coil without COP boot
C 180	11.94 - 05.00	89	1799	4	M 111.921	**CL604**	2	CP004	2	semidirect / coil with COP boot
						CL606	2	CP004	2	semidirect / coil without COP boot
C 200	01.94 - 08.95	100	1998	4	M 111.941	**CL611**	2			year / engine code / coil 2xPIN
	09.95 - 05.00	100	1998	4	M 111.945	**CL604**	2	CP004	2	semidirect /year/coil with COP boot
	09.95 - 05.00	100	1998	4	M 111.945	**CL606**	2	CP004	2	semidirect /year/coil without COP boot
C 200 Kompressor	10.95 - 05.00	132	1998	4	M 111.944	**CL604**	2	CP004	2	semidirect / coil with COP boot
						CL606	2	CP004	2	semidirect / coil without COP boot
C 200 Kompressor	11.96 - 05.00	141	1998	4	M 111.944	**CL604**	2	CP004	2	semidirect / coil with COP boot
						CL606	2	CP004	2	semidirect / coil without COP boot
C 220	03.93 - 05.00	110	2199	4	M 111.961	**CL611**	2			twin coil
C 220	06.96 - 06.97	110	2295	4	M 111.974	**CL604**	2	CP004	2	semidirect / coil with COP boot
						CL606	2	CP004	2	semidirect / coil without COP boot
C 230 Kompressor	10.95 - 05.00	142	2295	4	M 111.975	**CL604**	2	CP004	2	semidirect / coil with COP boot
						CL606	2	CP004	2	semidirect / coil without COP boot
C 240	06.97 - 05.00	125	2398	6	M 112.910	**CL605**	3			twin coil
C 280	05.93 - 05.00	142	2799	6	M 104.941	**CL604**	3	CP004	3	semidirect / coil with COP boot
						CL606	3	CP004	3	semidirect / coil without COP boot
C 280	06.97 - 05.00	145	2799	6	M 112.920	**CL605**	3			twin coil
C 36 AMG	05.94 - 05.00	206	3606	6	M 104.941 (AMG 3.6)	**CL606**	3	CP004	3	semidirect / pencil
C 43 AMG	08.97 - 05.00	225	4266	8	M 113.944	**CL605**	4			twin coil
C-Class (W203)										
C 180	10.00 - 05.02	95	1998	4	M 111.951	**CL616**	4	CP038	4	pencil
C 180 Kompressor	05.02 - 11.06	105	1796	4	M 271.946	**CL618**	4	CP039	4	year / pencil
	11.06 - 02.07	105	1796	4	M 271.946	**CL622**	4	CP039	4	year / pencil
C 200 CGI Kompressor	07.03 - 11.06	125	1796	4	M 271.942	**CL618**	4	CP039	4	year / pencil
	11.06 - 02.07	125	1796	4	M 271.942	**CL622**	4	CP039	4	year / pencil
C 200 Kompressor	05.02 - 11.06	120	1796	4	M 271.940	**CL618**	4	CP039	4	year / pencil
	11.06 - 02.07	120	1796	4	M 271.940	**CL622**	4	CP039	4	year / pencil
C 200 Kompressor	05.00 - 06.02	120	1998	4	M 111.955	**CL616**	4	CP038	4	pencil
C 230	01.05 - 02.07	150	2496	6	M 272.920	**CL605**	3			twin coil
						CL621	6	CP015	6	pencil
C 230 Kompressor	02.04 - 11.06	141	1796	4	M 271.948	**CL618**	4	CP039	4	year / pencil
	11.06 - 02.07	141	1796	4	M 271.948	**CL622**	4	CP039	4	year / pencil
C 240	05.00 - 02.07	125	2597	6	M 112.912	**CL605**	3			twin coil
C 240 4-matic	07.02 - 02.07	125	2597	6	M 112.916	**CL605**	3			twin coil
C 280	01.05 - 02.07	170	2996	6	M 272.940	**CL621**	6	CP015	6	pencil
C 280 4-matic	01.05 - 02.07	170	2996	6	M 272.941	**CL621**	6	CP015	6	pencil
C 32 AMG Kompressor	02.01 - 02.07	260	3199	6	M 112.961	**CL605**	3			twin coil
C 320	05.00 - 02.07	160	3199	6	M 112.946	**CL605**	3			twin coil
C 320 4-matic	07.02 - 02.07	160	3199	6	M 112.953	**CL605**	3			twin coil
C 350	01.05 - 02.07	200	3498	6	M 272.960	**CL605**	3			twin coil
						CL621	6	CP015	6	pencil
C 350 4-matic	01.05 - 02.07	200	3498	6	M 272.960/M 272.970	**CL605**	3			twin coil
						CL621	6	CP015	6	pencil
C 55 AMG	02.04 - 02.07	270	5439	8	M 113.988	**CL605**	4			twin coil
C-Class (W204)										
C 180 CGI	01.07 -	115	1796	4	M 271.820	**CL622**	4	CP039	4	pencil
C 180 Kompressor	01.08 -	115	1597	4	M 271.910	**CL622**	4	CP039	4	pencil
C 180 Kompressor	01.07 -	115	1796	4	M 271.952	**CL622**	4	CP039	4	pencil
C 200 CG	01.07 -	135	1796	4	M 271.820	**CL622**	4	CP039	4	pencil
C 200 Kompressor	01.07 -	135	1796	4	M 271.950	**CL622**	4	CP039	4	pencil
C 230	01.07 -	150	2496	6	M 272.921	**CL621**	6	CP015	6	pencil
C 230 4-matic	07.07 -	150	2496	6	M 272.911	**CL621**	6	CP015	6	pencil
C 250 CGI	07.09 -	150	1796	4	M 271.860	**CL622**	4	CP039	4	pencil
C 280	01.07 -	170	2996	6	M 272.947	**CL621**	6	CP015	6	pencil
C 280 4-matic	07.07 -	170	2996	6	M 272.948	**CL621**	6	CP015	6	pencil
C 300	07.09 -	170	2996	6	M 272.947	**CL621**	6	CP015	6	pencil
C 300	02.11 - 01.14	185	3498	6	M 276.957	**CL629**	6			pencil
C 300 4-matic	02.11 - 01.14	185	3498	6	M 276.957	**CL629**	6			pencil
C 300 4-matic	07.07 -	170	2996	6	M 272.948	**CL621**	6	CP015	6	pencil
C 350	01.07 -	200	3498	6	M 272.961	**CL621**	6	CP015	6	pencil
C 350	01.11 -	225	3498	6	M 276.957	**CL621**	6	CP015	6	pencil
C 350 4-matic	07.07 -	200	3498	6	M 272.971	**CL621**	6	CP015	6	pencil
C 350 4-matic	01.11 -	225	3498	6	M 276.957	**CL621**	6	CP015	6	pencil
C 350 CGI	09.08 - 01.14	215	3498	6	M 272.982	**CL628**	6			
C 63 AMG	02.08 - 01.14	358	6208	8	M 156.985	**CL627**	8			pencil
C 63 AMG	02.08 - 01.14	336	6208	8	M 156.985	**CL627**	8			pencil

model	year	kW	cm³	cyl	engine	coil	pcs	boot	pcs	info
MERCEDES										
C-Class Coupe (C204)										
C 180	06.11 -	115	1796	4	M 271.820	**CL622**	4	CP039	4	pencil
C 250	06.11 -	150	1796	4	M 271.860	**CL622**	4	CP039	4	pencil
C 350	06.11 -	225	3498	6	M 276.957	**CL629**	6			pencil
C 63 AMG	01.12 -	358	6208	8	M 156.985	**CL627**	8			pencil
C 63 AMG	01.12 -	380	6208	8	M 156.985	**CL627**	8			pencil
C 63 AMG	06.11 -	336	6208	8	M 156.985	**CL627**	8			pencil
C-Class Coupe (CL203)										
C 160 Kompressor	05.02 - 11.06	90	1796	4	M 271.921	**CL618**	4			year / pencil
	11.06 - 05.08	90	1796	4	M 271.921	**CL622**	4	CP039	4	year / pencil
C 180	03.01 - 05.02	95	1998	4	M 111.951	**CL616**	4	CP038	4	pencil
C 180 Kompressor	05.02 - 11.06	105	1796	4	M 271.946	**CL618**	4	CP039	4	year / pencil
	11.06 - 05.08	105	1796	4	M 271.946	**CL622**	4	CP039	4	year / pencil
C 200 CGI Kompressor	03.03 - 11.06	125	1796	4	M 271.942	**CL618**	4	CP039	4	year / pencil
	11.06 - 05.08	125	1796	4	M 271.942	**CL622**	4	CP039	4	year / pencil
C 200 Kompressor	05.02 - 11.06	120	1796	4	M 271.940	**CL618**	4	CP039	4	year / pencil
	11.06 - 05.08	120	1796	4	M 271.940	**CL622**	4	CP039	4	year / pencil
C 200 Kompressor	03.01 - 05.02	120	1998	4	M 111.955	**CL616**	4	CP038	4	pencil
C 230	01.05 - 05.08	150	2496	6	M 272.920	**CL621**	6	CP015	6	pencil
C 230 Kompressor	05.02 - 11.06	141	1796	4	M 271.948	**CL618**	4	CP039	4	year / pencil
	11.06 - 05.08	141	1796	4	M 271.948	**CL622**	4	CP039	4	year / pencil
C 230 Kompressor	03.01 - 05.02	145	2295	4	M 111.981	**CL616**	4	CP038	4	pencil
C 32 AMG Kompressor	05.02 - 05.08	260	3199	6	M 112.961	**CL605**	3			twin coil
C 320	09.02 - 05.08	160	3199	6	M 112.946	**CL605**	3			twin coil
C 350	01.05 - 05.08	200	3498	6	M 272.960	**CL605**	3			twin coil
						CL621	6	CP015	6	pencil
C-Class Kombi (S202)										
C 180 T	06.96 - 09.00	90	1799	4	M 111.920	**CL611**	2			coil 2xPIN / engine code
			1799	4	M 111.921	**CL604**	2	CP004	2	semidirect / coil with COP boot
			1799	4	M 111.921	**CL606**	2	CP004	2	semidirect / coil without COP boot
C 180 T	09.00 - 03.01	95	1998	4	M 111.952	**CL616**	4	CP038	4	pencil
C 200 T	06.96 - 03.01	100	1998	4	M 111.941	**CL611**	2			coil 2xPIN / engine code
			1998	4	M 111.945	**CL604**	2	CP004	2	semidirect / coil with COP boot
			1998	4	M 111.945	**CL606**	2	CP004	2	semidirect / coil without COP boot
C 200 T Kompressor	09.00 - 03.01	120	1998	4	M 111.956	**CL616**	4	CP038	4	pencil
C 200 T Kompressor	11.96 - 03.01	141	1998	4	M 111.944	**CL604**	2	CP004	2	semidirect / coil with COP boot
						CL606	2	CP004	2	semidirect / coil without COP boot
C 230 T	06.96 - 06.98	110	2295	4	M 111.974	**CL604**	2	CP004	2	semidirect / coil with COP boot
						CL606	2	CP004	2	semidirect / coil without COP boot
C 230 T Kompressor	06.97 - 09.00	142	2295	4	M 111.975	**CL604**	2	CP004	2	semidirect / coil with COP boot
						CL606	2	CP004	2	semidirect / coil without COP boot
C 240 T	06.97 - 09.00	125	2398	6	M 112.910	**CL605**	3			twin coil
C 240 T	09.00 - 03.01	125	2597	6	M 112.915	**CL605**	3			twin coil
C 280 T	06.97 - 03.01	145	2799	6	M 112.920	**CL605**	3			twin coil
C 43 AMG	08.97 - 03.01	225	4266	8	M 113.944	**CL605**	4			twin coil
C-Class T-Model (S203)										
C 180	03.01 - 05.02	95	1998	4	M 111.951	**CL616**	4	CP038	4	pencil
C 180 Kompressor	05.02 - 11.06	105	1796	4	M 271.946	**CL618**	4	CP039	4	year / pencil
	11.06 - 08.07	105	1796	4	M 271.946	**CL622**	4	CP039	4	year / pencil
C 200 CGI Kompressor	07.03 - 11.06	125	1796	4	M 271.942	**CL618**	4	CP039	4	year / pencil
	11.06 - 08.07	125	1796	4	M 271.942	**CL622**	4	CP039	4	year / pencil
C 200 Kompressor	05.02 - 11.06	120	1796	4	M 271.940	**CL618**	4	CP039	4	year / pencil
	11.06 - 08.07	120	1796	4	M 271.940	**CL622**	4	CP039	4	year / pencil
C 200 Kompressor	03.01 - 05.02	120	1998	4	M 111.955	**CL616**	4	CP038	4	pencil
C 230	01.05 - 08.07	150	2496	6	M 272.920	**CL621**	6	CP015	6	pencil
C 230 Kompressor	02.04 - 11.06	141	1796	4	M 271.948	**CL618**	4	CP039	4	year / pencil
	11.06 - 08.07	141	1796	4	M 271.948	**CL622**	4	CP039	4	year / pencil
C 240	03.01 - 08.07	125	2597	6	M 112.912	**CL605**	3			twin coil
C 240 4-matic	07.02 - 08.07	125	2597	6	M 112.916	**CL605**	3			twin coil
C 280	01.05 - 08.07	170	2996	6	M 272.940	**CL621**	6	CP015	6	pencil
C 280 4-matic	01.05 - 08.07	170	2996	6	M 272.941	**CL621**	6	CP015	6	pencil
C 32 AMG Kompressor	03.01 - 08.07	260	3199	6	M 112.961	**CL605**	3			twin coil
C 320	03.01 - 08.07	160	3199	6	M 112.946	**CL605**	3			twin coil
C 320 4-matic	07.02 - 08.07	160	3199	6	M 112.953	**CL605**	3			twin coil
C 350	01.05 - 08.07	200	3498	6	M 272.960	**CL605**	3			twin coil
						CL621	6	CP015	6	pencil
C 350 4-matic	01.05 - 08.07	200	3498	6	M 272.970	**CL605**	3			twin coil
						CL621	6	CP015	6	pencil
C 55 AMG	02.04 - 08.07	270	5439	8	M 113.988	**CL605**	4			twin coil
C-Class T-Model (S204)										
C 180 CGI	11.09 -	115	1796	4	M 271.820	**CL622**	4	CP039	4	pencil
C 180 Kompressor	01.08 -	115	1597	4	M 271.910	**CL622**	4	CP039	4	pencil

MERCEDES C-Class T-Model (S204) ▶

model	year	kW	cm³	cyl	engine	coil	pcs	boot	pcs	info
MERCEDES										
C-Class T-Model (S204)										
C 180 Kompressor	08.07 -	115	1796	4	M 271.952	**CL622**	4	CP039	4	pencil
C 200 Kompressor	08.07 -	135	1796	4	M 271.950	**CL622**	4	CP039	4	pencil
C 230	08.07 -	150	2496	6	M 272.921	**CL621**	6	CP015	6	pencil
C 250	07.09 -	150	1796	4	M 271.860	**CL622**	4	CP039	4	pencil
C 280	08.07 -	170	2996	6	M 272.947	**CL621**	6	CP015	6	pencil
C 350	08.07 -	200	3498	6	M 272.961	**CL621**	6	CP015	6	pencil
C 350 CGI	06.11 - 08.14	225	3498	6	M 276.957	**CL629**	6			pencil
C 63 AMG	01.12 - 08.14	358	6208	8	M 156.985	**CL627**	8			pencil
C 63 AMG	02.08 -	336	6208	8	M 156.985	**CL627**	8			pencil
CLC-Class (CL203)										
CLC 160	02.09 - 06.11	95	1597	4	M 271.911	**CL622**	4	CP039	4	pencil
CLC 180 Kompressor	05.08 - 06.11	105	1796	4	M 271.946	**CL622**	4	CP039	4	pencil
CLC 200 Kompressor	05.08 - 06.11	135	1796	4	M 271.957	**CL622**	4	CP039	4	pencil
CLC 230	05.08 - 06.11	150	2496	6	M 272.920	**CL621**	6	CP015	6	pencil
CLC 350	05.08 - 06.11	200	3498	6	M 272.960	**CL621**	6	CP015	6	pencil
CLK (C208)										
200	06.97 - 06.02	100	1998	4	M 111.945	**CL604**	2	CP004	2	semidirect / coil with COP boot
						CL606	2	CP004	2	semidirect / coil without COP boot
200 Kompressor	06.00 - 06.02	120	1998	4	M 111.956	**CL616**	4	CP038	4	pencil
200 Kompressor	06.97 - 06.00	141	1998	4	M 111.944	**CL604**	2	CP004	2	semidirect / coil with COP boot
						CL606	2	CP004	2	semidirect / coil without COP boot
230 Kompressor	06.97 - 06.00	142	2295	4	M 111.975/M 111.973	**CL604**	2	CP004	2	semidirect / coil with COP boot
						CL606	2	CP004	2	semidirect / coil without COP boot
230 Kompressor	06.00 - 06.02	145	2295	4	M 111.982	**CL616**	4	CP038	4	pencil
320	06.97 - 06.02	160	3199	6	M 112.940	**CL605**	3			twin coil
430	07.98 - 06.02	205	4266	8	M 113.943	**CL605**	4			twin coil
55 AMG	08.99 - 06.02	255	5439	8	M 113.981/M 113.984	**CL605**	4			twin coil
CLK (C209)										
200 CGI	07.03 - 11.06	125	1796	4	M 271.942	**CL618**	4	CP039	4	year / pencil
	11.06 - 05.09	125	1796	4	M 271.942	**CL622**	4	CP039	4	year / pencil
200 Kompressor	10.06 - 05.09	135	1796	4	M 271.955	**CL622**	4	CP039	4	pencil
200 Kompressor	09.02 - 11.06	120	1796	4	M 271.940	**CL618**	4	CP039	4	year / pencil
	11.06 - 05.09	120	1796	4	M 271.940	**CL622**	4	CP039	4	year / pencil
240	06.02 - 05.09	125	2597	6	M 112.912	**CL605**	3			twin coil
280	01.05 - 05.09	170	2996	6	M 272.940	**CL621**	6	CP015	6	pencil
320	06.02 - 05.09	160	3199	6	M 112.955	**CL605**	3			twin coil
350	01.05 - 05.09	200	3498	6	M 272.960	**CL621**	6	CP015	6	pencil
500	06.06 - 05.09	285	5461	8	M 273.965	**CL605**	4			twin coil
500	06.02 - 05.09	225	4966	8	M 113.968	**CL605**	4			twin coil
55 AMG	09.02 - 05.09	270	5439	8	M 113.987	**CL605**	4			twin coil
55 DTM AMG	06.04 - 05.09	428	5439	8	M 113.994	**CL605**	4			twin coil
63 AMG	04.06 - 05.09	354	6208	8	M 156.982	**CL627**	8			pencil
63 AMG	05.07 - 05.09	373	6208	8	M 156.982	**CL627**	8			pencil
CLK Cabriolet (A208)										
200	03.98 - 03.02	100	1998	4	M 111.941	**CL604**	2	CP004	2	semidirect / coil with COP boot
						CL606	2	CP004	2	semidirect / coil without COP boot
200 Kompressor	06.00 - 03.02	120	1998	4	M 111.956	**CL616**	4	CP038	4	pencil
200 Kompressor	03.98 - 06.00	141	1998	4	M 111.944	**CL604**	2	CP004	2	semidirect / coil with COP boot
						CL606	2	CP004	2	semidirect / coil without COP boot
230 Kompressor	03.98 - 06.00	142	2295	4	M 111.975/M 111.973	**CL604**	2	CP004	2	semidirect / coil with COP boot
						CL606	2	CP004	2	semidirect / coil without COP boot
230 Kompressor	06.00 - 03.02	145	2295	4	M 111.982	**CL616**	4	CP038	4	pencil
320	03.98 - 03.02	160	3199	6	M 112.940	**CL605**	3			twin coil
430	09.98 - 03.02	205	4266	8	M 113.943	**CL605**	4			twin coil
55 AMG	01.00 - 03.02	255	5439	8	M 113.981/M 113.984	**CL605**	4			twin coil
CLK Cabriolet (A209)										
CLK 200 CGI	07.03 - 03.10	125	1796	4	M 271.942	**CL622**	4	CP039	4	pencil
CLK 200 Kompressor	02.03 - 11.06	120	1796	4	M 271.940	**CL618**	4	CP039	4	year / pencil
	11.06 - 03.10	120	1796	4	M 271.940	**CL622**	4	CP039	4	year / pencil
CLK 200 Kompressor	10.06 - 03.10	135	1796	4	M 271.955	**CL622**	4	CP039	4	pencil
CLK 240	02.03 - 03.10	125	2597	6	M 112.912	**CL605**	3			twin coil
CLK 280	01.05 - 03.10	170	2996	6	M 272.940	**CL621**	6	CP015	6	pencil
CLK 320	02.03 - 03.10	160	3199	6	M 112.955	**CL605**	3			twin coil
CLK 350	01.05 - 03.10	200	3498	6	M 272.960	**CL621**	6	CP015	6	pencil
CLK 500	06.06 - 03.10	285	5461	8	M 273.967	**CL621**	8	CP015	8	pencil
CLK 500	02.03 - 03.10	225	4966	8	M 113.968	**CL605**	4			twin coil
CLK 55 AMG	02.03 - 03.10	270	5439	8	M 113.987	**CL605**	4			twin coil
CLK 63 AMG	04.06 - 03.10	354	6208	8	M 156.982	**CL627**	8			pencil
CLS (C218)										
CLK 63 AMG	02.11 -	386	5461	8	M 157.981	**CL629**	8			pencil
CLK 63 AMG	01.11 -	410	5461	8	M 157.981	**CL629**	8			pencil

MERCEDES CLS (C218) ▶

model	year	kW	cm³	cyl	engine	coil	pcs	boot	pcs	info
MERCEDES										
CLS (C218)										
CLS 63 AMG 4-matic	02.13 -	430	5461	8	M 157.981	**CL629**	8			pencil
CLS 63 AMG 4-matic	05.13 -	410	5461	8	M 157.981	**CL629**	8			pencil
CLS (C219)										
CLS 280	07.08 - 12.10	170	2996	6	M 272.943	**CL621**	6	CP015	6	pencil
CLS 300	04.09 - 12.10	170	2996	6	M 272.943	**CL621**	6	CP015	6	pencil
CLS 350	10.04 - 12.10	200	3498	6	M 272.964	**CL621**	6	CP015	6	pencil
CLS 350	04.06 - 12.10	215	3498	6	M 272.985	**CL628**	6			
CLS 350 CGI	04.09 - 12.10	215	3498	6	M 272.985	**CL628**	6			
CLS 500	04.06 - 12.10	285	5461	8	M 273.960	**CL621**	8	CP015	8	pencil
CLS 500	10.04 - 12.10	225	4966	8	M 113.967	**CL605**	4			twin coil
CLS 55 AMG	01.05 - 12.10	350	5439	8	M 113.990	**CL605**	4			twin coil
CLS 63 AMG	04.06 - 12.10	378	6208	8	M 156.983	**CL627**	8			pencil
CLS Shooting Brake (X218)										
CLS 350	10.12 -	225	3498	6	M 276.952	**CL629**	6			pencil
CLS 500	10.12 -	300	4663	8	M 278.922	**CL629**	8			pencil
CLS 500 4-matic	10.12 -	300	4663	8	M 278.922	**CL629**	8			pencil
CLS 63 AMG	05.13 -	410	5461	8	M 157.981	**CL629**	8			pencil
CLS 63 AMG 4-matic	02.13 -	430	5461	8	M 157.981	**CL629**	8			pencil
CLS 63 AMG 4-matic	05.13 -	410	5461	8	M 157.981	**CL629**	8			pencil
Coupe (C124)										
220 CE	10.92 - 05.93	110	2199	4	M 111.960	**CL611**	2			twin coil
230 CE	03.87 - 12.92	97	2298	4	M 102.982	**CL609**	1			coil OEM No. 0001584503
						CL614	1			coil OEM No. 0001586203
230 CE	03.87 - 12.92	100	2298	4	M 102.982	**CL609**	1			coil OEM No. 0001584503
						CL614	1			coil OEM No. 0001586203
230 CE cat	06.89 - 12.92	97	2298	4	M 102.982	**CL609**	1			coil OEM No. 0001584503
						CL614	1			coil OEM No. 0001586203
300 CE	03.87 - 05.93	132	2960	6	M 103.983	**CL609**	1			
300 CE-24	09.89 - 12.92	162	2960	6	M 104.980	**CL612**	1			
320 CE	10.92 - 05.93	162	3199	6	M 104.992	**CL604**	3	CP004	3	semidirect / pencil
E-Class (W124)										
E 200	06.93 - 06.95	100	1998	4	M 111.940	**CL611**	2			twin coil
E 220	06.93 - 06.95	110	2199	4	M 111.960	**CL611**	2			twin coil
E 280	06.93 - 06.95	145	2799	6	M 104.942	**CL604**	3	CP004	3	semidirect / pencil
E 280	06.93 - 06.95	142	2799	6	M 104.942	**CL604**	3	CP004	3	semidirect / pencil
E 300 4-matic	06.93 - 06.95	132	2960	6	M 103.985	**CL609**	1			
E 320	06.93 - 06.95	162	3199	6	M 104.992	**CL604**	3	CP004	3	semidirect / pencil
E 420	06.93 - 06.95	205	4196	8	M 119.975	**CL612**	1			for cyl 5-6-7-8
						CL613	1			for cyl 1-2-3-4
E 500	06.93 - 06.95	235	4973	8	M 119.974	**CL612**	1			for cyl 5-6-7-8
						CL613	1			for cyl 1-2-3-4
E 60 AMG	05.94 - 06.95	280	5956	8	M 119.974 AMG	**CL613**	1			coil OEM No. 0001586503
						CL614	1			coil OEM No. 0001586203
E-Class (W210)										
E 200	06.95 - 08.00	100	1998	4	M 111.942	**CL604**	2	CP004	2	semidirect / coil with COP boot
						CL606	2	CP004	2	semidirect / coil without COP boot
E 200 Kompressor	08.00 - 03.02	120	1998	4	M 111.957	**CL616**	4	CP038	4	pencil
E 200 Kompressor	06.97 - 03.02	137	1998	4	M 111.947	**CL606**	2	CP004	2	semidirect / pencil
E 230	06.95 - 06.97	110	2295	4	M 111.970	**CL604**	2	CP004	2	semidirect / coil with COP boot
						CL606	2	CP004	2	semidirect / coil without COP boot
E 240	06.97 - 08.00	125	2398	6	M 112.911	**CL605**	3			twin coil
E 240	08.00 - 03.02	125	2597	6	M 112.914	**CL605**	3			twin coil
E 280	01.96 - 06.97	142	2799	6	M 104.945	**CL604**	3	CP004	3	semidirect / pencil
E 280	12.96 - 03.02	150	2799	6	M 112.921	**CL605**	3			twin coil
E 280 4-matic	12.96 - 03.02	150	2799	6	M 112.921	**CL605**	3			
E 320	06.95 - 06.97	162	3199	6	M 104.995	**CL604**	3	CP004	3	semidirect / pencil
E 320	06.97 - 03.02	165	3199	6	M 112.941	**CL605**	3			twin coil
E 320 4-matic	06.97 - 03.02	165	3199	6	M 112.941	**CL605**	3			twin coil
E 420	01.96 - 06.97	205	4196	8	M 119.985	**CL617**	8			pencil
E 430	06.97 - 03.02	205	4266	8	M 113.940	**CL605**	4			twin coil
E 430 4-matic	05.99 - 03.02	205	4266	8	M 113.940	**CL605**	4			twin coil
E 50 AMG	02.96 - 08.97	255	4973	8	M 119.985 (AMG 5.0)	**CL617**	8			pencil
E 55 AMG	08.97 - 03.02	260	5439	8	M 113.980	**CL605**	4			twin coil
E 55 AMG 4-matic	03.01 - 03.02	260	5439	8	M 113.980	**CL605**	4			twin coil
E-Class (W211)										
E 200 Kompressor	04.06 - 11.06	135	1796	4	M 271.956	**CL618**	4	CP039	4	year / pencil
	11.06 - 12.08	135	1796	4	M 271.956	**CL622**	4	CP039	4	year / pencil
E 200 Kompressor	11.02 - 11.06	120	1796	4	M 271.941	**CL618**	4	CP039	4	year / pencil
	11.06 - 12.08	120	1796	4	M 271.941	**CL622**	4	CP039	4	year / pencil
E 200 NGT	11.06 - 12.08	120	1796	4	M 271.941	**CL622**	4	CP039	4	pencil
E 230	09.07 - 12.08	150	2496	6	M 272.922	**CL621**	6	CP015	6	pencil

MERCEDES E-Class (W211)

model	year	kW	cm³	cyl	engine	coil	pcs	boot	pcs	info
MERCEDES										
E-Class (W211)										
E 240	03.02 - 12.08	130	2597	6	M 112.917/M 112.913	**CL605**	3			twin coil
E 240 4-matic	03.03 - 12.08	130	2597	6	M 112.917	**CL605**	3			twin coil
E 280	03.05 - 12.08	170	2996	6	M 272.943	**CL621**	6	CP015	6	pencil
E 280 4-matic	01.06 - 12.08	170	2996	6	M 272.943	**CL621**	6	CP015	6	pencil
E 320	03.02 - 12.08	165	3199	6	M 112.949	**CL605**	3			twin coil
E 320 4-matic	03.03 - 12.08	165	3199	6	M 112.954	**CL605**	3			twin coil
E 350	03.05 - 12.08	200	3498	6	M 272.964	**CL621**	6	CP015	6	pencil
E 350 4-matic	03.05 - 12.08	200	3498	6	M 272.972	**CL621**	6	CP015	6	pencil
E 350 CGI	09.07 - 12.08	215	3498	6	M 272.985	**CL628**	6			
E 500	03.02 - 12.08	225	4966	8	M 113.967	**CL605**	4			twin coil
E 500	04.06 - 12.08	285	5461	8	M 273.960	**CL605**	4			twin coil
						CL621	8	CP015	8	pencil
E 500 4-matic	10.03 - 12.08	225	4966	8	M 113.969	**CL605**	4			twin coil
E 500 4-matic	04.06 - 12.08	285	5461	8	M 273.962	**CL605**	4			twin coil
						CL621	8	CP015	8	pencil
E 55 AMG Kompressor	10.02 - 12.08	350	5439	8	M 113.990	**CL605**	4			twin coil
E 63 AMG	03.06 - 12.08	378	6208	8	M 156.983	**CL627**	8			pencil
E-Class (W212)										
E 200 CGI	08.09 -	135	1796	4	M 271.820/M 271.860	**CL622**	4	CP039	4	pencil
E 200 NGT	03.11 -	120	1796	4	M 271.958	**CL622**	4	CP039	4	pencil
E 250 CGI	01.09 -	150	1796	4	M 271.860	**CL622**	4	CP039	4	pencil
E 300	07.11 -	185	3498	6	M 276.952	**CL629**	6			pencil
E 350 4-matic	01.09 - 08.11	200	3498	6	M 272.977	**CL621**	6	CP015	6	pencil
E 350 CGI	01.09 - 08.11	215	3498	6	M 272.983/M 272.982	**CL628**	6			
E 500	01.09 -	285	5461	8	M 273.971	**CL621**	8	CP015	8	pencil
E 500 4-matic	01.09 -	285	5461	8	M 273.970	**CL621**	8	CP015	8	pencil
E 63 AMG	02.11 -	386	5461	8	M 157.980/M 157.981	**CL629**	8			pencil
E 63 AMG	02.11 -	410	5461	8	M 157.981	**CL629**	8			pencil
E 63 AMG	02.13 -	430	5461	8	M 157.981	**CL629**	8			pencil
E 63 AMG	12.09 -	386	6208	8	M 156.985	**CL627**	8			pencil
E 63 AMG 4-matic	02.13 -	430	5461	8	M 157.981	**CL629**	8			pencil
E 63 AMG 4-matic	02.11 -	410	5461	8	M 157.981	**CL629**	8			pencil
E-Class Cabriolet (A124)										
E 200	06.93 - 03.98	100	1998	4	M 111.940	**CL611**	2			twin coil
E 220	06.93 - 03.98	110	2199	4	M 111.960	**CL611**	2			twin coil
E 320	06.93 - 03.98	162	3199	6	M 104.992	**CL604**	3	CP004	3	semidirect / pencil
E 36 AMG	05.94 - 03.98	200	3606	6	M 104.992 (AMG 3.6)	**CL604**	3	CP004	3	semidirect / pencil
E-Class Cabriolet (A207)										
E 200 CGI	01.10 -	135	1796	4	M 271.820/M 271.860	**CL622**	4	CP039	4	pencil
E 250 CGI	01.10 -	150	1796	4	M 271.860	**CL622**	4	CP039	4	pencil
E 300	04.11 -	185	3498	6	M 276.957	**CL629**	6			pencil
E 350	04.11 -	225	3498	6	M 276.957	**CL629**	6			pencil
E 350	01.10 -	215	3498	6	M 272.982/M 272.984	**CL628**	6			
E 500	01.10 -	285	5461	8	M 273.966	**CL621**	8	CP015	8	pencil
E 500	09.11 -	300	4663	8	M 278.922	**CL629**	8			pencil
E-Class Coupe (C124)										
E 200	06.93 - 06.97	100	1998	4	M 111.940	**CL611**	2			twin coil
E 220	06.93 - 06.97	110	2199	4	M 111.960	**CL611**	2			twin coil
E 320	06.93 - 06.97	162	3199	6	M 104.992	**CL604**	3	CP004	3	semidirect / pencil
E 36 AMG	05.94 - 06.97	200	3606	6	M 104.992 (AMG 3.6)	**CL604**	3	CP004	3	semidirect / pencil
E 36 AMG	06.93 - 04.95	195	3606	6	M 104.992 (AMG 3.6)	**CL604**	3	CP004	3	semidirect / pencil
E-Class Coupe (C207)										
E 200 CGI	01.10 -	135	1796	4	M 271.820/M 271.860	**CL622**	4	CP039	4	pencil
E 250 CGI	01.09 -	150	1796	4	M 271.860	**CL622**	4	CP039	4	pencil
E 300	04.11 -	185	3498	6	M 276.957	**CL629**	6			pencil
E 350	01.09 -	215	3498	6	M 272.982/M 272.984	**CL628**	6			
E 350	04.11 -	225	3498	6	M 276.957	**CL629**	6			pencil
E 500	01.09 -	285	5461	8	M 273.966	**CL621**	8	CP015	8	pencil
E 500	09.11 -	300	4663	8	M 278.922	**CL629**	8			pencil
E-Class Kombi (S124)										
E 200 T	06.93 - 06.96	100	1998	4	M 111.940	**CL611**	2			twin coil
E 220 T	06.93 - 06.96	110	2199	4	M 111.960	**CL611**	2			twin coil
E 280 T	06.93 - 06.96	142	2799	6	M 104.942	**CL604**	3	CP004	3	semidirect / pencil
E 280 T	06.93 - 06.96	145	2799	6	M 104.942	**CL604**	3	CP004	3	semidirect / pencil
E 300 T 4-matic	06.93 - 06.96	132	2960	6	M 103.985	**CL609**	1			
E 320 T	06.93 - 06.96	162	3199	6	M 104.992	**CL604**	3	CP004	3	semidirect / pencil
E 36 T AMG	05.94 - 06.96	200	3606	6	M 104.992 (AMG 3.6)	**CL604**	3	CP004	3	semidirect / pencil
E-Class Kombi (S210)										
E 200 T	06.96 - 08.00	100	1998	4	M 111.942	**CL604**	2	CP004	2	semidirect / coil with COP boot
						CL606	2	CP004	2	semidirect / coil without COP boot
E 200 T Kompressor	08.00 - 03.03	120	1998	4	M 111.957	**CL616**	4	CP038	4	pencil

MERCEDES E-Class Kombi (S210) ▶

model	year	kW	cm³	cyl	engine	coil	pcs	boot	pcs	info
MERCEDES										
E-Class Kombi (S210)										
E 200 T Kompressor	06.97 - 03.03	137	1998	4	M 111.947	**CL606**	2	CP004	2	semidirect / pencil
E 230 T	06.96 - 06.97	110	2295	4	M 111.970	**CL604**	2	CP004	2	semidirect / coil with COP boot
						CL606	2	CP004	2	semidirect / coil without COP boot
E 240 T	06.97 - 03.03	125	2398	6	M 112.911	**CL605**	3			twin coil
E 240 T	08.00 - 03.03	125	2597	6	M 112.914	**CL605**	3			twin coil
E 280 T	12.96 - 03.03	150	2799	6	M 112.921	**CL605**	3			twin coil
E 280 T 4-matic	12.96 - 03.03	150	2799	6	M 112.921	**CL605**	3			twin coil
E 320 T	12.96 - 03.03	165	3199	6	M 112.941	**CL605**	3			twin coil
E 320 T 4-matic	12.96 - 03.03	165	3199	6	M 112.941	**CL605**	3			twin coil
E 420 T	06.96 - 06.97	205	4196	8	M 119.985	**CL617**	4			pencil
E 430 T	06.97 - 03.03	205	4266	8	M 113.940	**CL605**	4			twin coil
E 430 T 4-matic	05.99 - 03.03	205	4266	8	M 113.940	**CL605**	4			twin coil
E 55 T AMG	08.97 - 03.03	260	5439	8	M 113.980	**CL605**	4			twin coil
E 55 T AMG 4-matic	03.01 - 03.03	260	5439	8	M 113.980	**CL605**	4			twin coil
E-Class T-Model (S211)										
350 CGI	05.06 - 07.09	215	3498	6	M 272.985	**CL628**	6			
E 200 Kompressor	04.06 - 11.06	135	1796	4	M 271.956	**CL618**	4	CP039	4	year / pencil
	11.06 - 07.09	135	1796	4	M 271.956	**CL622**	4	CP039	4	year / pencil
E 200 T Kompressor	03.03 - 11.06	120	1796	4	M 271.941	**CL618**	4	CP039	4	year / pencil
	11.06 - 07.09	120	1796	4	M 271.941	**CL622**	4	CP039	4	year / pencil
E 230 T	05.07 - 07.09	150	2496	6	M 272.922	**CL621**	6	CP015	6	pencil
E 240 T	03.03 - 07.09	130	2597	6	M 112.913	**CL605**	3			twin coil
E 240 T 4-matic	07.03 - 07.09	130	2597	6	M 112.917	**CL605**	3			twin coil
E 280 T	03.05 - 07.09	170	2996	6	M 272.943	**CL621**	6	CP015	6	pencil
E 280 T 4-matic	03.05 - 07.09	170	2996	6	M 272.943	**CL621**	6	CP015	6	pencil
E 320 T	03.03 - 07.09	165	3199	6	M 112.949	**CL605**	3			twin coil
E 320 T 4-matic	07.03 - 07.09	165	3199	6	M 112.954	**CL605**	3			twin coil
E 350 T	03.05 - 07.09	200	3498	6	M 272.964	**CL621**	6	CP015	6	pencil
E 350 T 4-matic	03.05 - 07.09	200	3498	6	M 272.972	**CL621**	6	CP015	6	pencil
E 500 T	10.03 - 07.09	225	4966	8	M 113.967	**CL605**	4			twin coil
E 500 T	04.06 - 07.09	285	5461	8	M 273.960	**CL605**	4			twin coil
						CL621	8	CP015	8	pencil
E 500 T 4-matic	10.03 - 07.09	225	4966	8	M 113.969	**CL605**	4			twin coil
E 500 T 4-matic	04.06 - 07.09	285	5461	8	M 273.962	**CL605**	4			twin coil
						CL621	8	CP015	8	pencil
E 55 T AMG Kompr.	07.03 - 07.09	350	5439	8	M 113.990	**CL605**	4			twin coil
E 63 AMG	03.06 - 07.09	378	6208	8	M 156.983	**CL627**	8			pencil
E-Class T-Model (S212)										
E 200 CGI	11.09 -	135	1796	4	M 271.860	**CL622**	4	CP039	4	pencil
E 250 CGI	11.09 -	150	1796	4	M 271.860	**CL622**	4	CP039	4	pencil
E 300	07.11 -	185	3498	6	M 276.952	**CL629**	6			pencil
E 300 4-matic	07.11 -	185	3498	6	M 276.952	**CL629**	6			pencil
E 350	09.11 -	225	3498	6	M 276.952	**CL629**	6			pencil
E 350 4-matic	11.09 -	200	3498	6	M 272.977	**CL621**	6	CP015	6	pencil
E 350 4-matic	09.11 -	225	3498	6	M 276.952	**CL629**	6			pencil
E 350 CGI	11.09 -	215	3498	6	M 272.983	**CL628**	6			
E 500	11.09 -	285	5461	8	M 273.971	**CL621**	8	CP015	8	pencil
E 500	09.11 -	300	4663	8	M 278.922	**CL629**	8			pencil
E 500 4-matic	09.11 -	300	4663	8	M 278.922	**CL629**	8			pencil
E 63 AMG	02.11 -	386	5461	8	M 157.980/M 157.981	**CL629**	8			pencil
E 63 AMG	02.11 -	410	5461	8	M 157.981	**CL629**	8			pencil
E 63 AMG	02.13 -	430	5461	8	M 157.981	**CL629**	8			pencil
E 63 AMG	08.09 -	386	6208	8	M 156.985	**CL627**	8			pencil
E 63 AMG 4-matic	02.13 -	430	5461	8	M 157.981	**CL629**	8			pencil
E 63 AMG 4-matic	02.11 -	410	5461	8	M 157.981	**CL629**	8			pencil
G-Class (W461)										
230 GE	06.93 -	92	2298	4	M 102.996/M 102.997	**CL609**	1			
230 GE	02.93 -	90	2298	4	M 102.979	**CL614**	1			
G-Class (W463)										
230 GE	06.90 - 06.93	93	2298	4	M 102.989	**CL609**	1			coil OEM No. 0001584503
						CL614	1			coil OEM No. 0001586203
300 GE	06.90 - 07.93	128	2960	6	M 103.987	**CL609**	1			1st coil type
						CL612	1			2nd coil type
						CL614	1			3rd coil type
300 GE	06.90 -	125	2960	6	M 103.987	**CL609**	1			coil OEM No. 0001584503
						CL614	1			coil OEM No. 0001586203
G 320	09.94 - 12.97	155	3199	6	M 104.996	**CL604**	3	CP004	3	semidirect / pencil
G 320	07.97 -	158	3199	6	M 112.945	**CL605**	3			twin coil
G 36 AMG	01.95 -	200	3606	6	M 104.996 (AMG 3.6)	**CL604**	3	CP004	3	semidirect / pencil
G 500	04.98 -	218	4966	8	M 113.962	**CL605**	4			twin coil
G 55 AMG	04.99 -	260	5439	8	M 113.982	**CL605**	4			twin coil

MERCEDES G-Class (W463) ▶

model	year	kW	cm³	cyl	engine	coil	pcs	boot	pcs	info
MERCEDES										
G-Class (W463)										
G 55 AMG	08.08 -	373	5439	8	M 113.993	**CL605**	4			twin coil
G 55 AMG	06.04 -	350	5439	8	M 113.993	**CL605**	4			twin coil
G 55 AMG	08.06 -	368	5439	8	M 113.993	**CL605**	4			twin coil
G 63 AMG	05.12 -	400	5461	8	M 157.980	**CL629**	8			pencil
G-Class Cabrio (W463)										
230 GE	06.90 - 02.93	93	2298	4	M 102.989	**CL609**	1			coil OEM No. 0001584503
						CL614	1			coil OEM No. 0001586203
300 GE	09.89 - 09.97	125	2960	6	M 103.987	**CL609**	1			coil OEM No. 0001584503
						CL614	1			coil OEM No. 0001586203
320 GE	09.94 - 11.97	155	3199	6	M 104.996	**CL604**	3	CP004	3	semidirect / pencil
G 320	11.97 -	158	3199	6	M 112.945	**CL605**	3			twin coil
G 500	04.98 -	218	4966	8	M 113.962	**CL605**	4			twin coil
GL-Class (X164)										
GL 450 4-matic	09.06 -	250	4663	8	M 273.923	**CL621**	8	CP015	8	pencil
GL 500 4-matic	09.06 -	285	5461	8	M 273.963	**CL621**	8	CP015	8	pencil
GL-Class (X166)										
GL 500 4-matic	07.12 -	320	4663	8	M 278.928	**CL629**	8			pencil
GL 63 AMG 4-matic	07.12 -	410	5461	8	M 157.982	**CL629**	8			pencil
GLK-Class (X204)										
280 4-matic	06.08 - 06.09	170	2996	6	M 272.948	**CL621**	6	CP015	6	pencil
300 4-matic	07.09 - 04.11	170	2996	6	M 272.948	**CL621**	6	CP015	6	pencil
350 4-matic	06.08 - 04.11	200	3498	6	M 272.971	**CL621**	6	CP015	6	pencil
350 4-matic	06.08 -	225	3498	6	M 276.957	**CL629**	6			pencil
Kombi (S124)										
200 T	01.86 - 05.90	77	1996	4	M 102.922	**CL609**	1			coil OEM No. 0001584503
						CL614	1			coil OEM No. 0001586203
200 T	09.85 - 08.89	80	1996	4	M 102.922	**CL609**	1			coil OEM No. 0001584503
						CL614	1			coil OEM No. 0001586203
200 TE	09.88 - 12.89	90	1996	4	M 102.962	**CL609**	1			coil OEM No. 0001584503
						CL614	1			coil OEM No. 0001586203
200 TE	05.86 - 06.93	100	1998	4	M 111.940	**CL611**	2			twin coil
200 TE	09.88 - 08.92	87	1996	4	M 102.963	**CL609**	1			coil OEM No. 0001584503
						CL614	1			coil OEM No. 0001586203
220 TE	10.92 - 05.93	110	2199	4	M 111.960	**CL611**	2			twin coil
230 TE	09.85 - 08.92	100	2298	4	M 102.982	**CL609**	1			coil OEM No. 0001584503
						CL614	1			coil OEM No. 0001586203
230 TE	09.85 - 08.92	97	2298	4	M 102.982	**CL609**	1			coil OEM No. 0001584503
						CL614	1			coil OEM No. 0001586203
230 TE cat	06.89 - 08.92	97	2298	4	M 102.982	**CL609**	1			coil OEM No. 0001584503
						CL614	1			coil OEM No. 0001586203
280 TE	10.92 - 06.93	145	2799	6	M 104.942	**CL604**	3	CP004	3	semidirect / pencil
300 TE 4-matic	09.86 - 06.93	132	2960	6	M 103.985	**CL609**	1			
300 TE-24	09.89 - 08.92	162	2960	6	M 104.980	**CL612**	1			
320 TE	10.92 - 06.93	162	3199	6	M 104.992	**CL604**	3	CP004	3	semidirect / pencil
M-Class (W163)										
ML 230	02.98 - 06.05	110	2295	4	M 111.977	**CL606**	2	CP004	2	semidirect / pencil
ML 320	02.98 - 08.02	160	3199	6	M 112.942	**CL605**	3			twin coil
ML 350	08.02 - 06.05	180	3724	6	M 112.970	**CL605**	3			twin coil
ML 350 4-matic	02.03 - 06.05	173	3724	6	M 112.970	**CL605**	3			twin coil
ML 430	02.98 - 06.05	200	4266	8	M 113.942	**CL605**	4			twin coil
ML 500	09.01 - 06.05	215	4966	8	M 113.964/M 113.965	**CL605**	4			twin coil
ML 55 AMG	02.00 - 06.05	255	5439	8	M 113.981	**CL605**	4			twin coil
M-Class (W164)										
ML 350 4-matic	07.05 -	200	3498	6		**CL621**	6	CP015	6	pencil
ML 500 4-matic	12.07 -	285	5461	8	M 273.963	**CL621**	8	CP015	8	pencil
ML 500 4-matic	07.05 -	225	4966	8	M 113.964	**CL605**	4			twin coil
ML 63 AMG 4-matic	01.06 -	375	6208	8	M 156.980	**CL627**	8			pencil
M-Class (W166)										
ML 350 4-matic	06.11 -	225	3498	6	M 276.955	**CL629**	6			pencil
ML 500 4-matic	02.12 -	300	4663	8	M 278.928	**CL629**	8			pencil
ML 63 AMG 4-matic	11.11 -	410	5461	8	M 157.982	**CL629**	8			pencil
ML 63 AMG 4-matic	11.11 -	386	5461	8	M 157.980	**CL629**	8			pencil
R-Class (W251, V251)										
R 280	01.07 -	170	2996	6	M 272.945	**CL621**	6	CP015	6	pencil
R 300	07.09 -	170	2996	6	M 272.945	**CL621**	6	CP015	6	pencil
R 350	01.07 -	200	3498	6	M 272.967	**CL621**	6	CP015	6	pencil
R 350 4-matic	01.06 -	200	3498	6	M 272.967	**CL621**	6	CP015	6	pencil
R 350 CGI 4-matic	01.06 -	225	3498	6	M 276.958	**CL629**	6			pencil
R 500 4-matic	01.07 -	285	5461	8	M 273.963	**CL621**	8	CP015	8	pencil
R 500 4-matic	01.06 -	225	4966	8	M 113.971	**CL605**	4			twin coil
R 63 AMG	02.06 -	375	6208	8	M 156.980	**CL627**	8			pencil

MERCEDES ▶

model	year	kW	cm³	cyl	engine	coil	pcs	boot	pcs	info
MERCEDES										
S-Class (W126)										
260 SE	09.85 - 06.91	118	2597	6	M 103.941	**CL609**	1			coil OEM No. 0001584503
						CL614	1			coil OEM No. 0001586203
260 SE	09.85 - 06.91	122	2597	6	M 103.941	**CL609**	1			coil OEM No. 0001584503
						CL614	1			coil OEM No. 0001586203
300 SE,SEL	01.86 - 06.91	132	2960	6	M 103.981	**CL609**	1			coil OEM No. 0001584503
						CL614	1			coil OEM No. 0001586203
300 SE,SEL	09.85 - 12.89	138	2960	6	M 103.981	**CL609**	1			coil OEM No. 0001584503
						CL614	1			coil OEM No. 0001586203
380 SE,SEL	12.79 - 08.85	150	3839	8	M 116.963	**CL609**	1			
420 SE,SEL	10.85 - 06.91	165	4196	8	M 116.965	**CL612**	1			
420 SE,SEL	10.85 - 12.87	170	4196	8	M 116.965	**CL612**	1			
420 SE,SEL	10.85 - 12.87	160	4196	8	M 116.965	**CL612**	1			
420 SE,SEL	10.85 - 06.91	150	4196	8	M 116.965	**CL612**	1			
500 SE,SEL	09.87 - 06.91	185	4973	8	M 117.965	**CL612**	1			
500 SE,SEL	09.87 - 06.91	195	4973	8	M 117.965	**CL612**	1			
500 SE,SEL	09.85 - 06.91	164	4973	8	M 117.965	**CL612**	1			
500 SE,SEL	12.79 - 08.85	170	4973	8	M 117.961/M 117.963	**CL609**	1			
500 SE,SEL	12.79 - 08.85	177	4973	8	M 117.961/M 117.963	**CL609**	1			
500 SE,SEL	09.85 - 06.91	180	4973	8	M 117.964/M 117.965	**CL612**	1			
500 SE,SEL cat	06.89 - 06.91	185	4973	8	M 117.965	**CL612**	1			
560 SE,SEL	08.87 - 06.91	205	5547	8	M 117.968	**CL612**	1			
560 SE,SEL	10.85 - 06.91	220	5547	8	M 117.968	**CL612**	1			
560 SE,SEL	10.85 - 12.87	200	5547	8	M 117.968	**CL612**	1			
560 SE,SEL	10.85 - 06.91	178	5547	8	M 117.968	**CL612**	1			
S-Class (W140)										
300 SE 2.8	01.93 - 10.98	145	2799	6	M 104.944	**CL604**	3	CP004	3	semidirect / coil with COP boot
						CL606	3	CP004	3	semidirect / coil without COP boot
300 SE,SEL/S320	03.91 - 10.98	170	3199	6	M 104.990	**CL613**	1			engine code
			3199	6	M 104.994	**CL604**	3	CP004	3	semidirect / coil with COP boot
			3199	6	M 104.994	**CL606**	3	CP004	3	semidirect / coil without COP boot
400 SE,SEL/S420	02.91 - 10.98	210	4196	8	M 119.971	**CL609**	1			coil for right side
	02.91 - 05.93	210				**CL614**	1			coil for left side / year
	09.92 - 10.98	210				**CL613**	1			coil for left side / year
	02.91 - 10.98	210				**CL617**	8			pencil
500 SE,SEL	02.91 - 05.93	240	4973	8	M 119.970	**CL609**	1			coil for right side / year
	02.91 - 05.93	240				**CL613**	1			1st coil for left side / year
	02.91 - 05.93	240				**CL614**	1			2nd coil for left side / year
	06.93 - 10.98	240				**CL617**	8			year / pencil
600 SE,SEL	04.91 - 12.92	300	5987	12	M 120.982/M 120.980	**CL609**	1			1st coil for right side
						CL612	1			2nd coil for right side
						CL613	1			coil for left side
S 280	02.93 - 10.98	142	2799	6	M 104.944	**CL604**	3	CP004	3	semidirect / coil with COP boot
						CL606	3	CP004	3	semidirect / coil without COP boot
S 420	01.93 - 10.98	205	4196	8	M 119.971	**CL609**	1			coil for right side
	06.93 - 10.98	205	4196	8	M 119.971	**CL614**	1			coil for left side
S 500	01.93 - 10.98	235	4973	8	M 119.980	**CL617**	8			pencil / engine code
			4973	8	M 119.970	**CL609**	1			coil for right side
			4973	8	M 119.970	**CL613**	1			1st coil for left side
			4973	8	M 119.970	**CL614**	1			2nd coil for left side
S 600	01.93 - 10.98	290	5987	12	M 120.982/M 120.980	**CL609**	1			1st coil for right side
						CL612	1			2nd coil for right side
						CL613	1			coil for left side
S-Class (W220)										
S 280	10.98 - 08.05	150	2799	6	M 112.922	**CL605**	3			twin coil
S 320	10.98 - 08.05	165	3199	6	M 112.944	**CL605**	3			twin coil
S 350	09.02 - 08.05	180	3724	6	M 112.972	**CL605**	3			twin coil
S 350 4-matic	06.03 - 08.05	180	3724	6	M 112.975	**CL605**	3			twin coil
S 430	10.98 - 08.05	205	4266	8	M 113.941	**CL605**	4			twin coil
S 430 4-matic	09.02 - 08.05	205	4266	8	M 113.948	**CL605**	4			twin coil
S 500	10.98 - 08.05	225	4966	8	M 113.960/M 113.966	**CL605**	4			twin coil
S 500 4-matic	09.02 - 08.05	225	4966	8	M 113.966	**CL605**	4			twin coil
S 55 AMG	04.99 - 08.05	265	5439	8	M 113.986	**CL605**	4			twin coil
S 55 AMG Kompressor	06.02 - 08.05	368	5439	8	M 113.991	**CL605**	4			twin coil
S-Class (W221)										
S 350	10.05 -	200	3498	6	M 272.965	**CL621**	6	CP015	6	pencil
S 350 4-matic	02.08 -	200	3498	6	M 272.975	**CL621**	6	CP015	6	pencil
S 350 CGI	04.11 -	225	3498	6	M 276.950	**CL621**	6	CP015	6	pencil
S 350 CGI 4-matic	04.11 -	225	3498	6	M 276.950	**CL621**	6	CP015	6	pencil
S 450	12.05 -	250	4663	8	M 273.922	**CL621**	8	CP015	8	pencil
S 450 4-matic	12.05 -	250	4663	8	M 273.924	**CL621**	8	CP015	8	pencil
S 500	10.05 -	285	5461	8	M 273.961	**CL621**	8	CP015	8	pencil

MERCEDES S-Class (W221) ▶

model	year	kW	cm³	cyl	engine	coil	pcs	boot	pcs	info
MERCEDES										
S-Class (W221)										
S 500 4-matic	10.05 -	285	5461	8	M 273.961/M 273.968	**CL621**	8	CP015	8	pencil
S 500 CGI 4-matic	03.11 -	320	4663	8	M 278.932	**CL629**	8			pencil
S 500 CGI	04.11 -	320	4663	8	M 278.932	**CL629**	8			pencil
S 63 AMG	02.12 -	420	5461	8	M 157.980	**CL629**	8			pencil
S 63 AMG	03.11 -	400	5461	8	M 157.980	**CL629**	8			pencil
S 63 AMG	10.06 -	386	6208	8	M 156.984	**CL627**	8			pencil
S-Class Coupe (C126)										
380 SEC	10.81 - 07.85	150	3839	8	M 116.963	**CL609**	1			
420 SEC	10.85 - 06.91	150	4196	8	M 116.965	**CL612**	1			
420 SEC	10.85 - 12.87	160	4196	8	M 116.965	**CL612**	1			
420 SEC	10.85 - 06.91	165	4196	8	M 116.965	**CL612**	1			
500 SEC	10.85 - 06.91	164	4973	8	M 117.965	**CL612**	1			
500 SEC	10.81 - 08.85	170	4973	8	M 117.963	**CL609**	1			
500 SEC	09.85 - 06.91	180	4973	8	M 117.965	**CL612**	1			
500 SEC	08.87 - 06.91	185	4973	8	M 117.965	**CL612**	1			
500 SEC	09.85 - 06.91	195	4973	8	M 117.965	**CL612**	1			
500 SEC cat	06.89 - 06.91	185	4973	8	M 117.965	**CL612**	1			
560 SEC	10.85 - 06.91	178	5547	8	M 117.968	**CL612**	1			
560 SEC	10.85 - 12.87	200	5547	8	M 117.968	**CL612**	1			
560 SEC	10.85 - 06.91	205	5547	8	M 117.968	**CL612**	1			
560 SEC	10.85 - 12.89	220	5547	8	M 117.968	**CL612**	1			
S-Class Coupe (C140)										
SEC/CL 420	10.94 - 02.99	205	4196	8	M 119.971	**CL613**	2			engine code
				8	M 119.981	**CL617**	8			pencil / engine code
SEC/CL 500	10.92 - 02.99	235	4973	8	M 119.970	**CL609**	1			coil for right side
						CL613	1			1st coil type for left side
						CL614	1			2nd coil type for left side
						CL617	8			pencil
SEC/CL 600	09.92 - 02.99	290	5987	12	M 120.982/M 120.980	**CL612**	1			coil for right side
						CL613	1			coil for left side
S-Class Coupe (C215)										
CL 500	03.99 - 03.06	225	4966	8	M 113.960	**CL605**	4			twin coil
CL 55 AMG	10.99 - 03.06	265	5439	8	M 113.986	**CL605**	4			twin coil
CL 55 AMG Kompressor	06.02 - 03.06	368	5439	8	M 113.991	**CL605**	4			twin coil
S-Class Coupe (C216)										
CL 500	06.06 -	285	5461	8	M 273.961	**CL621**	8	CP015	8	pencil
CL 500	02.11 -	320	4663	8	M 278.920	**CL629**	8			pencil
CL 500 4-matic	02.08 -	285	5461	8	M 273.968	**CL621**	8	CP015	8	pencil
CL 500 4-matic	02.11 -	320	4663	8	M 278.920	**CL629**	8			pencil
CL 63 AMG	02.11 -	400	5461	8	M 157.980	**CL629**	8			pencil
CL 63 AMG	01.10 -	420	5461	8	M 157.980	**CL629**	8			pencil
CL 63 AMG	10.06 -	386	6208	8	M 156.984	**CL627**	8			pencil
Sedan (W124)										
200	01.86 - 05.90	77	1996	4	M 102.922	**CL609**	1			coil OEM No. 0001584503
						CL614	1			coil OEM No. 0001586203
200	01.86 - 05.90	75	1996	4	M 102.922	**CL609**	1			coil OEM No. 0001584503
						CL614	1			coil OEM No. 0001586203
200	12.85 - 05.90	80	1996	4	M 102.922	**CL609**	1			coil OEM No. 0001584503
						CL614	1			coil OEM No. 0001586203
200 E	10.92 - 06.93	100	1998	4	M 111.940	**CL611**	2			twin coil
200 E	09.88 - 08.92	87	1996	4	M 102.963	**CL609**	1			coil OEM No. 0001584503
						CL614	1			coil OEM No. 0001586203
200 E	09.88 - 12.89	90	1996	4	M 102.963	**CL609**	1			coil OEM No. 0001584503
						CL614	1			coil OEM No. 0001586203
220 E	10.92 - 06.93	110	2199	4	M 111.960	**CL611**	2			twin coil
230 E	12.84 - 03.92	97	2298	4	M 102.982	**CL609**	1			coil OEM No. 0001584503
						CL614	1			coil OEM No. 0001586203
230 E	01.85 - 06.93	100	2298	4	M 102.982	**CL609**	1			coil OEM No. 0001584503
						CL614	1			coil OEM No. 0001586203
230 E cat	06.89 - 06.93	97	2298	4	M 102.982	**CL609**	1			coil OEM No. 0001584503
						CL614	1			coil OEM No. 0001586203
260 E	09.85 - 08.92	118	2597	6	M 103.940	**CL609**	1			coil OEM No. 0001584503
						CL614	1			coil OEM No. 0001586203
260 E	09.85 - 12.89	122	2597	6	M 103.940	**CL609**	1			coil OEM No. 0001584503
						CL614	1			coil OEM No. 0001586203
260 E 4-matic	09.86 - 08.92	118	2597	6	M 103.943	**CL609**	1			
260 E 4-matic	12.86 - 12.89	122	2597	6	M 103.940	**CL609**	1			
280 E	10.92 - 06.93	145	2799	6	M 104.942	**CL604**	3	CP004	3	semidirect / pencil
300 E 4-matic	09.86 - 06.93	132	2960	6	M 103.985	**CL609**	1			
300 E-24	09.88 - 08.92	162	2960	6	M 104.980	**CL612**	1			
320 E	10.92 - 06.93	162	3199	6	M 104.992	**CL604**	3	CP004	3	semidirect / pencil

MERCEDES Sedan (W124) ▶

model	year	kW	cm³	cyl	engine	coil	pcs	boot	pcs	info
MERCEDES										
Sedan (W124)										
400 E 4.2	10.92 - 06.93	205	4196	8	M 119.975	**CL612**	1			coil for right side
						CL613	1			coil for left side
500 E	01.91 - 06.93	240	4973	8	M 119.974	**CL609**	1			1st coil for cyl 5-6-7-8
						CL612	1			2nd coil for cyl 5-6-7-8
						CL613	1			1st coil for cyl 1-2-3-4
						CL614	1			2nd coil for cyl 1-2-3-4
500 E AMG 6.0	01.92 - 06.93	275	5956	8		**CL609**	1			coil for cyl 5-6-7-8
						CL613	1			1st coil for cyl 1-2-3-4
						CL614	1			2nd coil for cyl 1-2-3-4
SL (R107)										
420 SL	01.86 - 08.89	150	4196	8	M 116.964	**CL613**	1			
420 SL	01.86 - 08.89	160	4196	8	M 116.964	**CL613**	1			
500 SL	01.86 - 08.89	164	4973	8	M 117.964	**CL613**	1			
500 SL	05.80 - 12.85	170	4973	8	M 117.960	**CL609**	1			
500 SL	05.80 - 12.81	177	4973	8	M 117.960	**CL609**	1			
500 SL	01.86 - 08.89	180	4973	8	M 117.964/M 117.960	**CL613**	1			
SL (R129)										
280	08.93 - 10.01	142	2799	6	M 104.943	**CL604**	3	CP004	3	semidirect / pencil
280	05.98 - 10.01	150	2799	6	M 112.923	**CL605**	3			twin coil
300 SL	03.89 - 08.93	140	2960	6	M 103.984	**CL614**	1			
300 SL-24	03.89 - 07.93	170	2960	6	M 104.981	**CL613**	1			
320	09.93 - 10.01	170	3199	6	M 104.991	**CL604**	3	CP004	3	semidirect / pencil
320	05.98 - 10.01	165	3199	6	M 112.943	**CL605**	3			twin coil
500	09.92 - 10.01	235	4973	8	M 119.972	**CL612**	1			engine code/coil for right side
				8	M 119.972	**CL613**	1			engine code/coil for left side
				8	M 119.982	**CL617**	8			pencil / engine code
500	05.98 - 10.01	225	4966	8	M 113.961	**CL605**	4			twin coil
500 SL	09.89 - 08.92	240	4973	8	M 119.960/M 119.972	**CL609**	1			coil for right side
						CL614	1			coil for left side
55 AMG	03.00 - 10.01	260	5439	8	M 113.985	**CL605**	4			twin coil
60 AMG	05.97 - 10.01	280	5956	8	M 122.981	**CL617**	8			pencil
600	07.92 - 10.01	290	5987	12	M 120.981	**CL612**	1			engine code/coil for right side
				12	M 120.981	**CL613**	1			engine code/coil for left side
				12	M 120.983	**CL617**	12			pencil / engine code
SL (R230)										
280	03.08 - 01.12	170	2996	6	M 272.949	**CL621**	6	CP015	6	pencil
300	04.09 - 01.12	170	2996	6	M 272.949	**CL621**	6	CP015	6	pencil
350	03.06 - 01.12	200	3498	6	M 272.966	**CL621**	6	CP015	6	pencil
350	04.08 - 01.12	232	3498	6	M 272.968	**CL621**	6	CP015	6	pencil
500	03.06 - 01.12	285	5461	8	M 273.965	**CL605**	4			twin coil
350	03.03 - 01.12	180	3724	6	M 112.973	**CL605**	3			twin coil
500	10.01 - 01.12	225	4966	8	M 113.963	**CL605**	4			twin coil
55 AMG	03.06 - 01.12	380	5439	8	M 113.995	**CL605**	4			twin coil
55 AMG	10.01 - 06.02	350	5439	8	M 113.992	**CL605**	4			twin coil
55 AMG Kompressor	06.02 - 01.12	368	5439	8	M 113.992	**CL605**	4			twin coil
63 AMG	03.08 - 01.12	386	6208	8	M 156.981	**CL627**	8			pencil
SL (R231)										
350	02.12 -	225	3498	6	M 276.954	**CL629**	6			pencil
500	01.12 -	320	4663	8	M 278.927	**CL629**	8			pencil
63 AMG	01.12 -	395	5461	8	M 157.983	**CL629**	8			pencil
63 AMG	01.12 -	415	5461	8	M 157.983	**CL629**	8			pencil
SLK (R170)										
200	09.96 - 03.00	100	1998	4	M 111.946	**CL604**	2	CP004	2	semidirect / coil with COP boot
						CL606	2	CP004	2	semidirect / coil without COP boot
200 Kompressor	03.00 - 04.04	120	1998	4	M 111.958	**CL606**	2	CP004	2	semidirect / pencil
						CL616	4	CP038	4	pencil
200 Kompressor	10.96 - 03.00	141	1998	4	M 111.943	**CL606**	2	CP004	2	semidirect / pencil
230 Kompressor	09.96 - 03.00	142	2295	4	M 111.973	**CL606**	2	CP004	2	semidirect / pencil
230 Kompressor	03.00 - 04.04	145	2295	4	M 111.983	**CL616**	4	CP038	4	pencil
32 AMG Kompressor	03.01 - 04.04	260	3199	6	M 112.960	**CL605**	3			twin coil
320	03.00 - 04.04	160	3199	6	M 112.947	**CL605**	3			twin coil
SLK (R171)										
200 Kompressor	03.04 - 11.06	120	1795	4	M 271.944	**CL618**	4	CP039	4	year / pencil
	11.06 - 02.11	120	1795	4	M 271.944	**CL622**	4	CP039	4	year / pencil
200 Kompressor	01.08 - 02.11	135	1796	4	M 271.954	**CL622**	4	CP039	4	pencil
280	01.05 - 02.11	170	2996	6	M 272.942	**CL621**	6	CP015	6	pencil
300	04.09 - 02.11	170	2996	6	M 272.942	**CL621**	6	CP015	6	pencil
350	06.04 - 02.11	200	3498	6	M 272.963	**CL621**	6	CP015	6	pencil
350	01.08 - 02.11	224	3498	6	M 272.969	**CL621**	6	CP015	6	pencil
55 AMG	06.04 - 02.11	265	5439	8	M 113.989	**CL605**	4			twin coil

model	year	kW	cm³	cyl	engine	coil	pcs	boot	pcs	info
MERCEDES										
SLK (R172)										
200	02.11 -	135	1796	4	M 271.860/M 271.861	**CL622**	4	CP039	4	pencil
250	02.11 -	150	1796	4	M 271.860/M 271.861	**CL622**	4	CP039	4	pencil
350	02.11 -	225	3498	6	M 276.956	**CL629**	6			pencil
55 AMG	01.12 -	310	5461	8	M 152.980	**CL629**	8			pencil
SLR (R199)										
5.4	04.04 -	460	5439	8	M 155.980	**CL605**	4			twin coil
5.4 722 Edition	10.06 -	478	5439	8	M 155.980	**CL605**	4			twin coil
SLR Roadster (R199)										
5.4	04.07 -	460	5439	8	M 155.980	**CL605**	4			twin coil
5.4	10.06 -	478	5439	8	M 155.980	**CL605**	4			twin coil
Sprinter 2-t Bus (901, 902)										
214	02.95 - 05.06	105	2295	4	M 111.979	**CL604**	2	CP004	2	semidirect / coil with COP boot
						CL606	2	CP004	2	semidirect / coil without COP boot
214 NGT	04.00 - 05.06	92	2295	4	M 111.984	**CL606**	2	CP004	2	semidirect / pencil
Sprinter 2-t Flatbed (901, 902)										
214	02.95 - 05.06	105	2295	4	M 111.979	**CL604**	2	CP004	2	semidirect / coil with COP boot
						CL606	2	CP004	2	semidirect / coil without COP boot
214 NGT	04.00 - 05.06	92	2295	4		**CL606**	2	CP004	2	semidirect / pencil
Sprinter 2-t Van (901, 902)										
214	02.95 - 05.06	105	2295	4	M 111.979/M 111.984	**CL604**	2	CP004	2	semidirect / coil with COP boot
						CL606	2	CP004	2	semidirect / coil without COP boot
214 NGT	04.00 - 05.06	92	2295	4	M 111.984	**CL606**	2	CP004	2	semidirect / pencil
Sprinter 3-t Bus (903)										
314	02.95 - 05.06	105	2295	4	M 111.984	**CL604**	2	CP004	2	semidirect / coil with COP boot
						CL606	2	CP004	2	semidirect / coil without COP boot
314 4x4	08.02 - 05.06	105	2295	4	M 111.984	**CL606**	2	CP004	2	semidirect / pencil
314 NGT	04.00 - 05.06	92	2295	4	M 111.984	**CL606**	2	CP004	2	semidirect / pencil
Sprinter 3-t Bus (906)										
224	06.06 -	190	3498	6	M 272.979	**CL621**	6	CP015	6	pencil
Sprinter 3-t Flatbed (903)										
314	02.95 - 05.06	105	2295	4	M 111.984	**CL604**	2	CP004	2	semidirect / coil with COP boot
						CL606	2	CP004	2	semidirect / coil without COP boot
314 4x4	08.02 - 05.06	105	2295	4	M 111.984	**CL606**	2	CP004	2	semidirect / pencil
314 NGT	04.00 - 05.06	92	2295	4		**CL606**	2	CP004	2	semidirect / pencil
Sprinter 3-t Flatbed (906)										
224	06.06 -	190	3498	6	M 272.979	**CL621**	6	CP015	6	pencil
Sprinter 3-t Van (903)										
314	02.95 - 05.06	105	2295	4	M 111.979/M 111.984	**CL604**	2	CP004	2	semidirect / coil with COP boot
						CL606	2	CP004	2	semidirect / coil without COP boot
314 4x4	08.02 - 05.06	105	2295	4	M 111.984	**CL606**	2	CP004	2	semidirect / pencil
314 NGT	04.00 - 05.06	92	2295	4		**CL606**	2	CP004	2	semidirect / pencil
Sprinter 3-t Van (906)										
224	06.06 -	190	3498	6	M 272.979	**CL621**	6	CP015	6	pencil
Sprinter 3,5-t Bus (906)										
316	09.08 -	115	1796	4	M 271.951	**CL622**	4	CP039	4	pencil
324	06.06 -	190	3498	6	M 272.979	**CL621**	6	CP015	6	pencil
Sprinter 3,5-t Flatbed (906)										
316	09.08 -	115	1796	4	M 271.951	**CL622**	4	CP039	4	pencil
324	06.06 -	190	3498	6	M 272.979	**CL621**	6	CP015	6	pencil
Sprinter 3,5-t Van (906)										
316	09.08 -	115	1796	4	M 271.951	**CL622**	4	CP039	4	pencil
324	06.06 -	190	3498	6	M 272.979	**CL621**	6	CP015	6	pencil
Sprinter 4-t Bus (904)										
414	02.96 - 05.06	105	2295	4	M 111.979	**CL604**	2	CP004	2	semidirect / coil with COP boot
						CL606	2	CP004	2	semidirect / coil without COP boot
Sprinter 4-t Flatbed (904)										
414	02.96 - 05.06	105	2295	4	M 111.979	**CL604**	2	CP004	2	semidirect / coil with COP boot
						CL606	2	CP004	2	semidirect / coil without COP boot
414 4x4	05.97 - 05.06	105	2295	4	M 111.979	**CL604**	2	CP004	2	semidirect / coil with COP boot
						CL606	2	CP004	2	semidirect / coil without COP boot
Sprinter 4-t Van (904)										
414	02.96 - 05.06	105	2295	4	M 111.979	**CL604**	2	CP004	2	semidirect / coil with COP boot
						CL606	2	CP004	2	semidirect / coil without COP boot
414 4x4	05.97 - 05.06	105	2295	4	M 111.979	**CL604**	2	CP004	2	semidirect / coil with COP boot
						CL606	2	CP004	2	semidirect / coil without COP boot
Sprinter 4,6-t Flatbed (906)										
424	06.06 -	190	3498	6	M 272.979	**CL621**	6	CP015	6	pencil
Sprinter 4,6-t Van (906)										
424	06.06 -	190	3498	6	M 272.979	**CL621**	6	CP015	6	pencil
Sprinter 5-t Flatbed (906)										
516	09.08 -	115	1796	4	M 271.951	**CL622**	4	CP039	4	pencil

MERCEDES Sprinter 5-t Flatbed (906) ▶

model	year	kW	cm³	cyl	engine	coil	pcs	boot	pcs	info
MERCEDES										
Sprinter 5-t Flatbed (906)										
524	06.06 -	190	3498	6	M 272.979	**CL621**	6	CP015	6	pencil
Sprinter 5-t Van (906)										
524	06.06 -	190	3498	6	M 272.979	**CL621**	6	CP015	6	pencil
Vaneo (414)										
1.6	02.02 - 07.05	60	1598	4	M 166.961	**CL610**	1			rail coil
1.6	02.02 - 07.05	75	1598	4	M 166.961	**CL610**	1			rail coil
1.9	02.02 - 07.05	92	1898	4	M 166.991	**CL610**	1			rail coil
V-Class (638/2)										
V 200	02.97 - 07.03	95	1998	4	M 111.948/M 111.950	**CL604**	2	CP004	2	semidirect / coil with COP boot
						CL606	2	CP004	2	semidirect / coil without COP boot
V 230	10.96 - 07.03	105	2295	4	M 111.978	**CL604**	2	CP004	2	semidirect / coil with COP boot
						CL606	2	CP004	2	semidirect / coil without COP boot
V 280	08.97 - 07.03	128	2792	6	M 104.900	**CL021**	1			
Viano (W639)										
3.0	09.03 -	140	3199	6	M 112.951	**CL605**	3			twin coil
3.2	09.03 -	160	3199	6	M 112.951	**CL605**	3			twin coil
3.7	06.04 -	170	3724	6	M 112.976	**CL605**	3			twin coil
Vito / Mixto Van (W639)										
119	09.03 -	140	3199	6	M 112.951	**CL605**	3			twin coil
122	09.03 -	160	3199	6	M 112.951	**CL605**	3			twin coil
126	09.07 -	190	3498	6	M 272.978	**CL621**	6	CP015	6	pencil
Vito Bus (638)										
113 2.0	02.96 - 07.03	95	1998	4	M 111.948/M 111.950	**CL604**	2	CP004	2	semidirect / coil with COP boot
						CL606	2	CP004	2	semidirect / coil without COP boot
114 2.3	12.96 - 07.03	105	2295	4	M 111.978	**CL604**	2	CP004	2	semidirect / coil with COP boot
						CL606	2	CP004	2	semidirect / coil without COP boot
Vito Bus (W639)										
119	09.03 -	140	3199	6	M 112.951	**CL605**	3			twin coil
122	09.03 -	160	3199	6	M 112.951	**CL605**	3			twin coil
123	06.04 -	170	3724	6	M 112.976	**CL605**	3			twin coil
126	09.07 -	190	3498	6	M 272.978	**CL621**	6	CP015	6	pencil
Vito Van (638)										
113 2.0	03.97 - 07.03	95	1998	4	M 111.948/M 111.950	**CL604**	2	CP004	2	semidirect / coil with COP boot
						CL606	2	CP004	2	semidirect / coil without COP boot
114 2.3	03.97 - 07.03	105	2295	4	M 111.978	**CL604**	2	CP004	2	semidirect / coil with COP boot
						CL606	2	CP004	2	semidirect / coil without COP boot
MG										
MG TF										
115	03.02 - 12.09	85	1588	4	16 K4F	**CL700**	1			with distributor
						CL711	2			semidirect / pencil
120	03.02 - 12.09	88	1796	4	18 K4F	**CL700**	1			with distributor
						CL711	2			semidirect / pencil
135	03.02 - 12.09	100	1796	4	18 K4F	**CL700**	1			with distributor
						CL711	2			semidirect / pencil
160	03.02 - 12.09	118	1796	4	18 K4K	**CL708**	2			semidirect / pencil
MG ZR										
105	06.01 - 04.05	76	1396	4	14 K4F	**CL700**	1			with distributor
						CL711	2			semidirect / pencil
120	06.01 - 04.05	86	1796	4	18 K4F	**CL700**	1			with distributor
						CL711	2			semidirect / pencil
160	06.01 - 04.05	118	1796	4	18 K4K	**CL708**	2			semidirect / pencil
MG ZS										
120	07.01 - 04.05	86	1796	4	18 K4F	**CL711**	2			semidirect / pencil
MG ZS Hatchback										
120	07.01 - 10.05	86	1796	4	18 K4F	**CL711**	2			semidirect / pencil
MG ZT										
160	06.01 - 07.05	118	2497	6	25 K4F	**CL702**	6			pencil
180	01.03 - 07.05	130	2497	6	25 K4F	**CL702**	6			pencil
190	06.01 - 07.05	140	2497	6	25 K4F	**CL702**	6			pencil
MG ZT- T										
160	10.01 - 07.05	118	2497	6	25 K4F	**CL702**	6			pencil
180	01.03 - 07.05	130	2497	6	25 K4F	**CL702**	6			pencil
190	10.01 - 07.05	140	2497	6	25 K4F	**CL702**	6			pencil
MGF (RD)										
1.8 i 16V	03.95 - 03.02	88	1796	4	18 K4F	**CL700**	1			with distributor
						CL711	2			semidirect / pencil
1.8 i VVC	03.95 - 03.02	107	1796	4	18 K4K	**CL708**	2			semidirect / pencil
1,8 i VVC	10.01 - 03.02	118	1796	4	18 K4K	**CL708**	2			semidirect / pencil
MINI										
Mini (R50, R53)										
1.4	04.03 - 09.06	55	1398	4		**CL706**	1			

MINI Mini (R50, R53) ▶

model	year	kW	cm³	cyl	engine	coil	pcs	boot	pcs	info
MINI										
Mini (R50, R53)										
1.6 Cooper	06.01 - 09.06	85	1598	4	W10 B16 A	**CL706**	1			
1.6 Cooper S	03.02 - 09.06	120	1598	4	W11 B16 A	**CL706**	1			
1.6 Cooper S	07.04 - 09.06	125	1598	4	W11 B16 A	**CL706**	1			
1.6 John Cooper Works	03.06 - 09.06	160	1598	4	W11 B16 A	**CL603**	4			pencil
1.6 One	06.01 - 09.06	66	1598	4	W10 B16 A	**CL706**	1			
1.6 Works	11.03 - 09.06	155	1598	4	W11 B16 A	**CL706**	1			
Mini (R56)										
1.4 One	11.06 - 03.10	70	1397	4	N12 B14 A	**CL603**	4			pencil
1.4 One	03.09 - 03.10	55	1397	4	N12 B14 A	**CL603**	4			pencil
1.6 Cooper	10.06 - 02.12	88	1598	4	N12 B16 A	**CL603**	4			pencil
1.6 Cooper	09.09 - 11.13	90	1598	4	N16 B16 A	**CL603**	4			pencil
1.6 John Cooper Works	03.08 - 11.13	155	1598	4	N14 B16 C	**CL603**	4			pencil
1.6 One	03.10 - 11.13	55	1598	4	N16 B16 A	**CL603**	4			pencil
1.6 One	03.10 - 11.13	72	1598	4	N16 B16 A	**CL603**	4			pencil
Mini (F55)										
1.5 Cooper	07.14 -	100	1499	3	B38 A15 A	**CL626**	3			pencil
2.0 Cooper S	07.14 -	141	1998	4	B46 A20 A/B48 A20 A	**CL626**	4			pencil
Mini (F56)										
1.2 One	03.14 -	75	1198	3	B38 A12 A	**CL626**	3			pencil
1.2 One First	06.14 -	55	1198	3	B38 A12 A	**CL626**	3			pencil
1.5 Cooper	12.13 -	100	1499	3	B38 A15 A	**CL626**	3			pencil
2.0 Cooper S	12.13 -	141	1998	4	B46 A20 A/B48 A20 A	**CL626**	4			pencil
Mini Cabriolet (R52)										
1.6 Cooper	07.04 - 11.07	85	1598	4	W10 B16 A	**CL706**	1			
1.6 Cooper S	07.04 - 11.07	125	1598	4	W11 B16 A	**CL706**	1			
1.6 John Cooper Works	07.04 - 11.07	155	1598	4	W11 B16 A	**CL706**	1			
1.6 One	07.04 - 11.07	66	1598	4	W10 B16 A	**CL706**	1			
Mini Cabriolet (R57)										
1.6 Cooper	03.09 -	88	1598	4	N12 B16 A	**CL603**	4			pencil
1.6 Cooper	03.10 -	90	1598	4	N16 B16 A	**CL603**	4			pencil
1.6 Cooper S	03.09 -	128	1598	4	N14 B16 A	**CL603**	4			pencil
1.6 John Cooper Works	03.08 -	155	1598	4	N14 B16 C	**CL603**	4			pencil
1.6 One	03.10 -	72	1598	4	N16 B16 A	**CL603**	4			pencil
Mini Clubman (R55)										
1.6 Cooper	10.07 - 12.13	88	1598	4	N16 B16 A/N12 B16 A	**CL603**	4			pencil
1.6 Cooper	03.10 -	90	1598	4	N16 B16 A	**CL603**	4			pencil
1.6 Cooper S	10.07 - 02.10	128	1598	4	N14 B16 A	**CL603**	4			pencil
1.6 One	03.10 -	72	1598	4	N16 B16 A	**CL603**	4			pencil
Mini Countryman (R60)										
1.6 Cooper	06.10 -	90	1598	4	N16 B16 A	**CL603**	4			pencil
1.6 One	06.10 -	72	1598	4	N16 B16 A	**CL603**	4			pencil
MITSUBISHI										
ASX (GA_W_)										
1.6	05.10 -	85	1590	4	4A92	**CL929**	4			pencil
1.6	06.10 -	86	1590	4	4A92	**CL929**	4			pencil
1.8	02.10 -	102	1798	4	4B10	**CL927**	4			pencil
Carisma (DA_)										
1.6	05.96 - 06.06	66	1597	4	4G92	**CL547**	2	CP016	2	semidirect / pencil
1.6	01.00 - 06.06	70	1597	4	4G92	**CL547**	2	CP016	2	semidirect / pencil
1.6	05.97 - 06.06	73	1597	4	4G92	**CL547**	2	CP016	2	semidirect / pencil
1.6	09.00 - 06.06	76	1597	4	4G92	**CL547**	2	CP016	2	semidirect / pencil
1.8	05.96 - 06.06	85	1834	4	4G93	**CL547**	2	CP016	2	semidirect / pencil
1.8 GDI	10.00 - 06.06	90	1834	4	4G93 (GDI)	**CL549**	4			pencil
1.8 16V	07.95 - 06.06	103	1834	4	4G93	**CL547**	2	CP016	2	semidirect / pencil
						CL549	4			pencil
1.8 16V GDI	09.97 - 06.06	92	1834	4	4G93 (GDI)	**CL549**	4			pencil
Carisma Sedan (DA_)										
1.3	09.00 - 10.04	55	1298	4	4G13 (12V)	**CL547**	2	CP016	2	semidirect / pencil
1.6	09.96 - 06.06	66	1597	4	4G92	**CL547**	2	CP016	2	semidirect / pencil
1.6	01.00 - 06.06	70	1597	4	4G92	**CL547**	2	CP016	2	semidirect / pencil
1.6	05.97 - 06.06	73	1597	4	4G92	**CL547**	2	CP016	2	semidirect / pencil
1.6	09.00 - 06.06	76	1597	4	4G92	**CL547**	2	CP016	2	semidirect / pencil
1.8	09.96 - 06.06	85	1834	4	4G93	**CL547**	2	CP016	2	semidirect / pencil
1.8 GDI	10.00 - 06.06	90	1834	4	4G93 (GDI)	**CL549**	4			pencil
1.8 16V GDI	09.97 - 06.06	92	1834	4	4G93 (GDI)	**CL549**	4			pencil
Colt III (C5_A)										
1.5 cat	07.90 - 05.92	66	1468	4	4G15 (12V)	**CL508**	1			
1.5 GLXi	04.88 - 05.92	62	1468	4	4G15	**CL508**	1			
1.6 GTi 16V	04.88 - 05.90	91	1596	4	4G61	**CL526**	1			
Colt IV (CA_A)										
1.6	03.96 - 04.96	66	1597	4	4G92	**CL547**	2	CP016	2	semidirect / pencil

MITSUBISHI ▶

model	year	kW	cm³	cyl	engine	coil	pcs	boot	pcs	info
MITSUBISHI										
Colt V (CJ_, CP_)										
1300	09.00 - 09.03	60	1299	4	4G13 (16V)	**CL547**	2	CP016	2	semidirect / pencil
1300 GL,GLX	05.96 - 09.00	55	1299	4	4G13 (12V)	**CL502**	1			
1600	09.00 - 09.03	76	1597	4	4G92	**CL547**	2	CP016	2	semidirect / pencil
1600 GLX	05.96 - 09.00	66	1597	4	4G92	**CL547**	2	CP016	2	semidirect / pencil
Colt VI (Z3_A, Z2_A)										
1.1	10.04 - 06.12	55	1124	3	3A91	**CL597**	3			pencil
1.3	06.04 - 06.12	70	1332	4	4A90	**CL597**	4			pencil
1.5	06.04 - 06.12	80	1499	4	4A91	**CL597**	4			pencil
Colt CZC Cabriolet (RG)										
1.5	05.06 - 07.09	80	1499	4	4A91	**CL597**	4			pencil
Eclipse I (D2_A)										
1.8	12.89 - 03.94	68	1755	4	4G37	**CL508**	1			
2.0 i 16V	04.91 - 11.95	110	1997	4	4G63 (DOHC 16V)	**CL562**	2			twin coil
2.0 i 16V 4WD	04.91 - 11.95	110	1997	4	4G63 (DOHC 16V)	**CL562**	2			twin coil
Galant III (E1_A)										
2.0 Turbo ECi	06.84 - 04.90	110	1997	4	4G63 T (SOHC 8V)	**CL508**	1			
Galant IV (E3_A)										
2.0	04.89 - 10.92	80	1997	4	4G63 (SOHC 8V)	**CL508**	1			1st coil type
						CL525	1			2nd coil type
2.0 4WD	04.89 - 10.92	80	1997	4	4G63 (SOHC 8V)	**CL508**	1			1st coil type
						CL525	1			2nd coil type
2.0 GTI 16V	11.88 - 10.92	106	1997	4	4G63 (DOHC 16V)	**CL526**	1			
2.0 GTI 16V	11.88 - 10.92	107	1997	4	4G63 (DOHC 16V)	**CL526**	1			
2.0 GTI 16V 4x4	07.89 - 12.92	106	1997	4	4G63 (DOHC 16V)	**CL526**	1			
Galant IV Sedan (E3_A)										
1.8	11.87 - 10.92	66	1755	4	4G37	**CL562**	2			twin coil
2.0	11.87 - 10.92	80	1997	4	4G63 (SOHC 8V)	**CL508**	1			with distributor / 1st coil type
						CL525	1			with distributor / 2nd coil type
						CL562	2			without distributor / twin coil
2.0 4WD	12.88 - 10.92	80	1997	4	4G63 (SOHC 8V)	**CL508**	1			with distributor / 1st coil type
						CL525	1			with distributor / 2nd coil type
2.0 GTI 16V	11.87 - 10.92	106	1997	4	4G63 (DOHC 16V)	**CL508**	1			with distributor
						CL526	1			without distributor / coil 4xDIN
						CL562	2			without distributor / coil 2xDIN
2.0 GTI 16V	11.88 - 10.92	107	1997	4	4G63 (DOHC 16V)	**CL526**	1			coil 4xDIN
						CL562	2			coil 2xDIN
2.0 GTi 16V 4WD	06.88 - 10.92	106	1997	4	4G63 (DOHC 16V)	**CL508**	1			with distributor
						CL526	1			without distributor / coil 4xDIN
						CL562	2			without distributor / coil 2xDIN
2.0 GTI 16V 4WD cat	09.91 - 10.92	110	1997	4	4G63 (DOHC 16V)	**CL508**	1			
Galant VI (EA_)										
2.0	09.00 - 10.04	98	1997	4	4G63 (SOHC 16V)	**CL547**	2	CP016	2	semidirect / pencil
2.0	09.96 - 09.00	100	1997	4	4G63 (SOHC 16V)	**CL547**	2	CP016	2	semidirect / pencil
2.4 GDI	09.00 - 10.04	106	2351	4	4G64 (GDI)	**CL547**	2	CP016	2	semidirect / pencil
2.4 GDI	02.99 - 09.00	110	2351	4	4G64 (GDI)	**CL547**	2	CP016	2	semidirect / pencil
Galant VI Station Wagon (EA_)										
2.0	09.96 - 09.00	100	1997	4	4G63 (SOHC 16V)	**CL547**	2	CP016	2	semidirect / pencil
2.0	09.00 - 10.03	98	1997	4	4G63 (SOHC 16V)	**CL547**	2	CP016	2	semidirect / pencil
2.4 GDI	09.00 - 10.03	106	2351	4	4G64 (GDI)	**CL547**	2	CP016	2	semidirect / pencil
2.4 GDI	02.99 - 10.03	110	2351	4	4G64 (GDI)	**CL547**	2	CP016	2	semidirect / pencil
Galant Sedan (DJ_, ED_, EF_)										
2.4	10.03 -	116	2378	4	4G69	**CL930**	4			pencil
Grandis (NA_W)										
2.4	04.04 -	121	2378	4	4G69	**CL930**	4			pencil
L 300 Bus (P0_W, P1_W, P2_W)										
2.0 4WD	12.86 -	65	1997	4	4G63 (SOHC 8V)	**CL907**	1			
2.0 4WD	11.86 -	66	1997	4	4G63 (SOHC 8V)	**CL907**	1			
2.4	11.90 -	82	2351	4	4G64 (8V)	**CL508**	1			
2.4 4WD	11.90 -	82	2351	4	4G64 (8V)	**CL508**	1			
L 300 Flatbed (P1_T)										
2.0	07.94 - 04.00	85	1997	4	4G63 (DOHC 16V)	**CL907**	1			
Lancer III Station Wagon (C1_V, C3_V)										
1.5	09.85 - 12.87	55	1468	4	4G15	**CL508**	1			
1.5	09.88 - 12.90	61	1468	4	4G15	**CL508**	1			
1.5 12V	09.90 - 12.91	66	1468	4	4G15 (12V)	**CL508**	1			
1.8 4WD	08.90 - 06.92	69	1755	4	4G37	**CL508**	1			
Lancer IV (C6_A, C7_A)										
1.5	06.88 - 05.92	62	1468	4	4G15	**CL508**	1			
1.5 12V	05.89 - 05.92	66	1468	4	4G15 (12V)	**CL508**	1			
1.6 16V	06.92 - 05.94	83	1597	4	4G92	**CL562**	2			twin coil
1.6 4WD	06.92 - 11.93	84	1597	4	4G92	**CL562**	2			twin coil

MITSUBISHI Lancer IV (C6_A, C7_A) ▶

model	year	kW	cm³	cyl	engine	coil	pcs	boot	pcs	info
MITSUBISHI										
Lancer IV (C6_A, C7_A)										
1.8 4WD	09.89 - 06.92	71	1755	4	4G37	**CL508**	1			
Lancer IV Sedan (C6_A)										
1.5	04.88 - 05.92	62	1468	4	4G15 (12V)/4G15	**CL508**	1			
1.5 12V	05.89 - 05.92	66	1468	4	4G15 (12V)	**CL508**	1			
Lancer VI (CJ-CP_)										
1.3 12V	12.95 - 08.03	55	1299	4	4G13 (12V)	**CL502**	1			
1.5 16V	12.95 - 08.03	69	1468	4	4G15 (16V)	**CL502**	1			
1.6 16V	12.95 - 08.03	66	1597	4	4G92	**CL547**	2	CP016	2	semidirect / pencil
2.0 16V EVO	08.98 - 08.01	206	1997	4	4G63 Turbo	**CL582**	2			semidirect / pencil
Lancer Combi (CS_W)										
1.6	09.03 - 10.08	72	1584	4	4G18	**CL931**	2			semidirect / pencil
2.0	09.03 - 12.07	99	1997	4	4G63 (DOHC 16V)	**CL547**	2	CP016	2	semidirect / pencil
Lancer Sedan (CS_A, CT0)										
1.3	09.03 -	60	1299	4	4G13 (16V)	**CL931**	2			semidirect / pencil
1.6	09.03 -	72	1584	4	4G18	**CL931**	2			semidirect / pencil
2.0	12.03 -	99	1997	4	4G63 (DOHC 16V)	**CL547**	2	CP016	2	semidirect / pencil
2.0 16V EVO VIII	03.04 -	195	1997	4	4G63 Turbo	**CL582**	2			semidirect / pencil
2.0 16V EVO IX	01.06 -	206	1997	4	4G63 Turbo	**CL582**	2			semidirect / pencil
Lancer Sedan (CY/Z_A)										
1.5	06.08 -	80	1499	4	4A91	**CL929**	4			pencil
1.5 BiFuel	02.10 -	80	1499	4	4A91	**CL929**	4			pencil
1.6	05.10 -	86	1590	4	4A92	**CL929**	4			pencil
1.8	05.10 -	103	1798	4	4B10	**CL927**	4			pencil
1.8	02.08 -	105	1798	4	4B10	**CL927**	4			pencil
1.8 BiFuel	02.10 -	105	1798	4	4B10	**CL927**	4			pencil
2.0 EVO 4WD	06.08 -	217	1998	4	4B11 T/C	**CL925**	4			pencil
Lancer Sportback (CX_A)										
1.5	06.08 -	80	1499	4	4A91	**CL929**	4			pencil
1.5 BiFuel	03.10 -	80	1499	4	4A91	**CL929**	4			pencil
1.6	05.10 -	86	1590	4	4A92	**CL929**	4			pencil
1.8	03.09 -	103	1798	4	4B10	**CL927**	4			pencil
1.8	06.08 -	105	1798	4	4B10	**CL927**	4			pencil
1.8 BiFuel	02.10 -	105	1798	4	4B10	**CL927**	4			pencil
1.8 Flex	03.09 -	103	1798	4	4B10	**CL927**	4			pencil
2.0 Ralliart 4WD	10.08 -	177	1998	4	4B11 T/C	**CL925**	4			pencil
Outlander I (CU_W)										
2.0	05.03 - 10.06	100	1997	4	4G63 (DOHC 16V)	**CL582**	2			semidirect / pencil
2.0 4WD	05.03 - 10.06	93	1997	4	4G63 (DOHC 16V)	**CL582**	2			semidirect / pencil
2.0 4WD	05.03 - 10.06	100	1997	4	4G63 (DOHC 16V)	**CL582**	2			semidirect / pencil
2.0 4WD	01.02 - 10.06	177	1997	4	4G63 Turbo	**CL582**	2			semidirect / pencil
2.0 Turbo 4WD	04.04 - 10.06	148	1997	4	4G63 T (DOHC 16V)	**CL582**	2			semidirect / pencil
2.4 4WD	05.03 - 10.06	102	2351	4	4G64 (SOHC 16V)	**CL547**	2	CP016	2	semidirect / pencil
2.4 4WD	11.03 - 10.06	118	2378	4	4G69	**CL930**	4			pencil
2.4 4WD	05.03 - 10.06	119	2378	4	4G69	**CL930**	4			pencil
Outlander II (CW_W)										
2.0	11.06 - 11.12	108	1998	4	4B11	**CL927**	4			pencil
2.4 4WD	09.07 - 11.12	125	2360	4	4B12	**CL927**	4			pencil
Pajero I (L04_G, L14_G)										
3.0 V6	11.88 - 11.90	104	2972	6	6G72 (SOHC 12V)	**CL543**	1			
Pajero I Canvas Top (L04_G)										
2.6	01.83 - 11.90	76	2555	4	4G54	**CL543**	1			
Pajero II (V3_W, V2_W, V4_W)										
2.4	04.91 - 10.99	82	2351	4	4G64 (12V)	**CL508**	1			1st coil type
						CL558	1			2nd coil type
3.0 V6 24V	06.97 - 10.99	130	2972	6	6G72 (SOHC 24V)	**CL598**	2			coil 2xDIN / for cyl 1-2, 4-5
						CL928	1			coil 2xDIN / for cyl 3-6
3.0 V6 24V	06.94 - 05.97	133	2972	6	6G72 (SOHC 24V)	**CL598**	2			coil 2xDIN / for cyl 1-2, 4-5
						CL928	1			coil 2xDIN / for cyl 3-6
3.0 V6 4WD	12.90 - 12.95	110	2972	6	6G72 (SOHC 12V)	**CL543**	1			
3.5 V6 24V	07.97 - 10.99	143	3497	6	6G74 (SOHC 24V)	**CL598**	2			coil 2xDIN / for cyl 1-2, 4-5
						CL928	1			coil 2xDIN / for cyl 3-6
3.5 V6 24V	06.97 - 10.99	153	3497	6	6G74 (SOHC 24V)	**CL598**	2			coil 2xDIN / for cyl 1-2, 4-5
						CL928	1			coil 2xDIN / for cyl 3-6
Pajero II Canvas Top (V2_W, V4_W)										
1.8 GDI	06.98 - 04.00	96	1834	4	4G93 (GDI)	**CL547**	2	CP016	2	semidirect / pencil
2.4	04.91 - 04.00	82	2351	4	4G64 (12V)	**CL508**	1			1st coil type
						CL558	1			2nd coil type
3.0 V6	12.90 - 12.95	110	2972	6	6G72 (SOHC 12V)	**CL543**	1			
3.0 V6 24V	06.94 - 04.00	133	2972	6	6G72 (SOHC 24V)	**CL598**	2			coil 2xDIN / for cyl 1-2, 4-5
						CL928	1			coil 2xDIN / for cyl 3-6

model	year	kW	cm³	cyl	engine	coil	pcs	boot	pcs	info
MITSUBISHI										
Pajero Pinin (H6_W, H7_W)										
1.8	11.01 - 06.07	84	1834	4	4G93	**CL547**	2	CP016	2	semidirect / pencil
						CL549	4			pencil
1.8 GDI	10.99 - 06.07	88	1834	4	4G93 (GDI)	**CL547**	2	CP016	2	semidirect / pencil
						CL549	4			pencil
2.0 GDI	10.00 - 06.07	95	1999	4	4G94 (GDI)	**CL549**	4			pencil
Pajero Sport (K90)										
3.0 V6	11.98 -	130	2972	6	6G72 (SOHC 24V)	**CL598**	2			coil 2xDIN / for cyl 1-2, 4-5
						CL928	1			coil 2xDIN / for cyl 3-6
3.0 V6	06.00 -	125	2972	6	6G72 (SOHC 24V)	**CL598**	2			coil 2xDIN / for cyl 1-2, 4-5
						CL928	1			coil 2xDIN / for cyl 3-6
Santamo										
2.0 16V	05.99 - 12.04	102	1997	4	4G63 (DOHC 16V)	**CL532**	1			
2.0 16V 4WD	05.99 - 12.04	102	1997	4	4G63 (DOHC 16V)	**CL532**	1			
Sapporo III (E16A)										
2.4	06.87 - 08.90	91	2351	4	4G64 (8V)	**CL525**	1			
Sigma (F2_A, F1_A)										
3.0 V6	12.90 - 07.96	130	2972	6	6G72 (SOHC 12V)	**CL558**	1			
3.0 V6	12.90 - 07.96	151	2972	6	6G72 (DOHC 24V)	**CL558**	1			
Sigma Station Wagon (F0_W)										
3.0	06.92 - 10.96	125	2972	6	6G72 (SOHC 12V)	**CL558**	1			
Space Runner (N6_W)										
2.0	08.99 - 08.02	100	1997	4	4G63 (DOHC 16V)	**CL547**	2	CP016	2	semidirect / pencil
Space Star (DG_A)										
1.3 16V	09.00 - 12.04	60	1299	4	4G13 (16V)	**CL931**	2			semidirect / pencil
1.3 16V	12.98 - 12.04	61	1299	4	4G13 (16V)	**CL931**	2			semidirect / pencil
1.3 16V	06.98 - 12.04	63	1299	4	4G13 (16V)	**CL931**	2			semidirect / pencil
1.6 16V	01.01 - 12.04	72	1584	4	4G18	**CL931**	2			semidirect / pencil
1.8 GDI	06.98 - 12.04	87	1834	4	4G93 (GDI)	**CL547**	2	CP016	2	semidirect / pencil
						CL549	4			pencil
1.8 GDI	06.98 - 12.04	90	1834	4	4G93 (GDI)	**CL547**	2	CP016	2	semidirect / pencil
						CL549	4			pencil
1.8 MPI	10.02 - 12.04	82	1834	4	4G93	**CL547**	2	CP016	2	semidirect / pencil
Space Wagon (N3_W, N4_W)										
2.0	10.92 - 10.98	98	1997	4	4G63 (DOHC 16V)	**CL547**	2	CP016	2	semidirect / pencil
2.0 4WD	10.92 - 10.98	98	1997	4	4G63 (DOHC 16V)	**CL547**	2	CP016	2	semidirect / pencil
Space Wagon (N9_W, N8_W)										
2.0 GDI	10.98 - 12.04	98	1997	4	4G63 (SOHC 16V)	**CL547**	2	CP016	2	semidirect / pencil
2.4 GDI	10.98 - 12.04	110	2351	4	4G64 (GDI)	**CL547**	2	CP016	2	semidirect / pencil
2.4 GDI	09.00 - 12.04	108	2351	4	4G64 (GDI)	**CL547**	2	CP016	2	semidirect / pencil
2.4 GDI 4WD	10.98 - 12.04	110	2351	4	4G64 (GDI)	**CL547**	2	CP016	2	semidirect / pencil
2.4 GDI 4WD	09.00 - 12.04	108	2351	4	4G64 (GDI)	**CL547**	2	CP016	2	semidirect / pencil
NISSAN										
100 NX (B13)										
1.6	03.90 - 06.92	66	1597	4	GA16DS	**CL509**	1			
1.6 SR	09.93 - 10.94	75	1597	4	GA16DE	**CL509**	1			
2.0	10.90 - 10.94	110	1998	4	SR20DE	**CL509**	1			
2.0 GTI	03.91 - 10.94	105	1998	4	SR20DE	**CL509**	1			
200 SX (S14)										
2.0 i 16V Turbo	10.93 - 12.99	147	1998	4	SR20DET	**CL509**	1			
Almera II (N16)										
1.5	07.00 -	66	1498	4	QG15DE	**CL510**	4			1st pencil
						CL511	4	CP049	4	2nd pencil
1.5	10.02 -	72	1497	4	QG15DE	**CL510**	4			1st pencil
						CL511	4	CP049	4	2nd pencil
1.8	07.00 -	84	1769	4	QG18DE	**CL510**	4			1st pencil
						CL511	4	CP049	4	2nd pencil
1.8	10.02 -	85	1769	4	QG18DE	**CL510**	4			1st pencil
						CL511	4	CP049	4	2nd pencil
Almera II Hatchback (N16)										
1.5	03.00 -	66	1498	4	QG15DE	**CL511**	4	CP049	4	pencil
1.5	10.02 -	72	1497	4	QG15DE	**CL511**	4	CP049	4	pencil
1.8	01.00 -	84	1769	4	QG18DE	**CL511**	4	CP049	4	pencil
1.8	10.02 -	85	1769	4	QG18DE	**CL511**	4	CP049	4	pencil
Almera Tino (V10)										
1.8	08.00 -	84	1769	4	QG18DE	**CL510**	4			1st pencil
						CL511	4	CP049	4	2nd pencil
1.8	12.02 -	85	1769	4	QG18DE	**CL510**	4			1st pencil
						CL511	4	CP049	4	2nd pencil
Bluebird (T72 , T12)										
1.8 Turbo	12.85 - 05.90	99	1809	4	CA18T	**CL558**	1			

model	year	kW	cm³	cyl	engine	coil	pcs	boot	pcs	info
NISSAN										
Bluebird (U11)										
1.8 Turbo	04.84 - 05.90	99	1809	4	CA18T	**CL558**	1			
Bluebird Hatchback (T72, T12)										
1.8 Turbo	12.85 - 11.92	99	1809	4	CA18T	**CL558**	1			
Cube (Z12)										
1.6 16V	03.10 -	81	1598	4	HR16DE	**CL554**	4	CP050	4	pencil
Juke (F15)										
1.6	01.13 -	69	1598	4	HR16DE	**CL911**	4	CP019	4	pencil
1.6	06.10 -	86	1598	4	HR16DE	**CL912**	4			pencil
1.6 DIG-T	06.10 -	140	1618	4	MR16DDT	**CL900**	4			pencil
1.6 DIG-T 4x4	06.10 -	140	1618	4	MR16DDT	**CL900**	4			pencil
1.6 DIG-T Nismo	11.12 -	147	1618	4	MR16DDT	**CL900**	4			pencil
1.6 DIG-T Nismo 4x4	02.13 -	147	1618	4	MR16DDT	**CL900**	4			pencil
Kubistar (X76)										
1.2	08.03 - 10.09	44	1149	4	D7F 764	**CL116**	1			
1.2 16V	04.06 - 10.09	55	1149	4	D4F 712	**CL116**	1			
1.6 16V	08.03 - 10.09	70	1598	4	K4M 752	**CL100**	4			pencil
Kubistar Van (X80)										
1.2	08.03 -	44	1149	4	D7F 764	**CL116**	1			
1.2 16V	04.06 -	55	1149	4	D4F 712	**CL116**	1			
1.6 16V	08.03 -	70	1598	4	K4M 752	**CL100**	4			pencil
Maxima II (J30)										
3.0 i	10.88 - 06.94	125	2960	6	VG30E	**CL509**	1			with distributor
						CL537	3	CP020	3	pencil / right side
						CL538	3	CP022	3	pencil / left side
								CP023	3	Mitsubishi system right
								CP024	3	Mitsubishi system left
Maxima QX (A32)										
2.0	02.95 - 08.00	103	1995	6	VQ20DE	**CL535**	3	CP020	3	pencil / right side
			1995	6	VQ20DE	**CL536**	3	CP021	3	pencil / left side
			1995	6	VQ20DE			CP023	3	Mitsubishi system right
			1995	6	VQ20DE			CP024	3	Mitsubishi system left
2.5 V6 24V	02.95 - 08.00	140	2496	6	VQ25DE	**CL535**	3	CP020	3	pencil / right side
			2496	6	VQ25DE	**CL536**	3	CP021	3	pencil / left side
			2496	6	VQ25DE			CP023	3	Mitsubishi system right
			2496	6	VQ25DE			CP024	3	Mitsubishi system left
3.0	01.95 - 08.00	142	2988	6	VQ30DE	**CL535**	3	CP020	3	pencil / right side
			2988	6	VQ30DE	**CL536**	3	CP021	3	pencil / left side
			2988	6	VQ30DE			CP023	3	Mitsubishi system right
			2988	6	VQ30DE			CP024	3	Mitsubishi system left
Maxima QX (A33)										
2.0 V6 24V	03.00 - 11.03	103	1995	6	VQ20DE	**CL535**	3	CP020	3	pencil / right side
						CL536	3	CP021	3	pencil / left side
								CP023	3	Mitsubishi system right
								CP024	3	Mitsubishi system left
2.5 V6 24V	03.00 - 11.03	154	2496	6	VQ25DE	**CL535**	3	CP020	3	pencil / right side
						CL536	3	CP021	3	pencil / left side
								CP023	3	Mitsubishi system right
								CP024	3	Mitsubishi system left
3.0 V6 24V	03.00 - 11.03	147	2988	6	VQ30DE	**CL535**	3	CP020	3	pencil / right side
						CL536	3	CP021	3	pencil / left side
								CP023	3	Mitsubishi system right
								CP024	3	Mitsubishi system left
Maxima Station Wagon										
2.0 QX	10.97 -	103	1995	6	VQ20DE	**CL535**	3	CP020	3	pencil / right side
						CL536	3	CP021	3	pencil / left side
								CP023	3	Mitsubishi system right
								CP024	3	Mitsubishi system left
2.5 V6 24V	10.97 -	140	2496	6	VQ25DE	**CL535**	3	CP020	3	pencil / right side
						CL536	3	CP021	3	pencil / left side
								CP023	3	Mitsubishi system right
								CP024	3	Mitsubishi system left
3.0 QX	10.97 -	142	2988	6	VQ30DE	**CL535**	3	CP020	3	pencil / right side
						CL536	3	CP021	3	pencil / left side
								CP023	3	Mitsubishi system right
								CP024	3	Mitsubishi system left
Micra I (K10)										
1.2	07.86 - 07.92	40	1235	4	MA12S	**CL509**	1			
Micra II (K11)										
1.0 i 16V	07.00 - 09.00	40	998	4	CG10DE	**CL521**	4			pencil
1.0 i 16V	09.00 - 02.03	44	998	4	CG10DE	**CL521**	4			pencil
1.3 i 16V	08.92 - 09.00	55	1275	4	CG13DE	**CL521**	4			pencil

NISSAN Micra II (K11) ▶

model	year	kW	cm³	cyl	engine	coil	pcs	boot	pcs	info
NISSAN										
Micra II (K11)										
1.4 i 16V	09.00 - 02.03	60	1348	4	CGA3DE	**CL521**	4			pencil
Micra III (K12)										
1.0 16V	01.03 - 06.10	48	998	4	CG10DE	**CL534**	4			pencil
1.2 16V	01.03 - 06.10	48	1240	4	CR12DE/CG12DE	**CL534**	4			pencil
1.2 16V	01.03 - 06.10	59	1240	4	CR12DE/CG12DE	**CL534**	4			pencil
1.4 16V	01.03 - 06.10	65	1386	4	CR14DE	**CL534**	4			pencil
1.6 160 SR	05.05 - 06.10	81	1598	4	HR16DE	**CL554**	4	CP050	4	pencil
Micra IV (K13)										
1.2	05.10 -	59	1198	3	HR12DE	**CL911**	3	CP019	3	penci
1.2 DIG	04.11 -	72	1198	3	HR12DDR	**CL911**	3	CP019	3	pencil
Micra C+C (K12)										
1.4 16V	08.05 -	65	1386	4	CR14DE	**CL534**	4			pencil
1.6 160 SR	08.05 -	81	1598	4	HR16DE	**CL554**	4	CP050	4	pencil
Murano (Z50)										
3.5 4x4	08.03 -	172	3498	6	VQ35DE	**CL915**	6	CP018	6	pencil
Note (E11)										
1.4	03.06 -	65	1386	4	CR14DE	**CL534**	4			pencil
1.6	03.06 -	81	1598	4	HR16DE	**CL554**	4	CP050	4	pencil
Note (E12)										
1.2	06.13 -	59	1198	3	HR12DE	**CL911**	3	CP019	3	pencil
NV200 Evalia										
1.6 16V	07.10 -	81	1598	4	HR16DE	**CL912**	4			pencil
Pathfinder (R50)										
3.3 V6 4WD	03.98 - 10.00	110	3275	6	VG33E	**CL913**	5	CP026	5	pencil for cyl 2-3-4-5-6
						CL914	1	CP025	1	pencil for cyl 1
3.3 V6 4WD	09.97 - 12.04	125	3275	6	VG33E	**CL913**	5	CP026	5	pencil for cyl 2-3-4-5-6
						CL914	1	CP025	1	pencil for cyl 1
3.5 V6 4WD	11.00 - 12.01	162	3498	6	VQ35	**CL913**	5	CP026	5	year / pencil for cyl 2-3-4-5-6
	11.00 - 12.01	162	3498	6	VQ35	**CL914**	1	CP025	1	year /pencil for cyl 1
	01.03 - 12.04	162	3498	6	VQ35	**CL915**	6	CP018	6	year / pencil
Pathfinder (R51)										
4.0 4WD	09.05 -	198	3954	6	VQ40DE	**CL915**	6	CP018	6	pencil
Pick-Up (D21)										
2.4 i 12V	10.95 - 02.98	91	2389	4	KA24E	**CL509**	1			
2.4 i 12V 4WD	10.95 - 02.98	93	2389	4	KA24E	**CL509**	1			
Prairie Pro (M11)										
2.0 i	10.88 - 04.92	72	1974	4	CA20E	**CL509**	1			
2.0 i 4x4	10.88 - 12.92	72	1974	4	CA20E	**CL509**	1			
2.4 i	04.92 - 07.94	98	2389	4	KA24E	**CL509**	1			
2.4 i 4x4	04.92 - 07.94	98	2389	4	KA24E	**CL509**	1			
Primastar Bus (X83)										
2.0	03.01 -	88	1998	4	F4R 722/F4R 720	**CL100**	4			pencil
2.0	02.03 -	88	1998	4	F4R 720	**CL100**	4			pencil
Primera (P10)										
1.6	06.90 - 01.96	66	1597	4	GA16DS	**CL509**	1			
2.0	06.90 - 04.93	105	1998	4	SR20DE	**CL509**	1			
2.0 16V	06.90 - 01.96	85	1998	4	SR20DI	**CL509**	1			
2.0 16V 4x4	04.91 - 06.96	85	1998	4	SR20DI	**CL509**	1			
2.0 GT	06.90 - 01.96	110	1998	4	SR20DE	**CL509**	1			
2.0 GT 4x4	03.91 - 04.93	105	1998	4	SR20DE	**CL509**	1			
2.0 i	01.95 - 06.96	92	1998	4	SR20DE	**CL509**	1			
Primera (P11)										
1.6 16V	09.00 - 12.01	78	1597	4	QG16DE	**CL511**	4	CP049	4	pencil
1.8 16V	08.99 - 12.01	84	1769	4	QG18DE	**CL511**	4	CP049	4	pencil
Primera (P12)										
1.6	03.02 -	78	1597	4	QG16DE	**CL511**	4	CP049	4	pencil
1.6	01.02 -	80	1597	4	QG16DE	**CL511**	4	CP049	4	pencil
2.0	03.02 -	103	1998	4	QR20DE	**CL592**	4	CP019	4	pencil
Primera Combi (WP12)										
1.6 Visia	01.02 -	80	1597	4	QG16DE	**CL511**	4	CP049	4	pencil
2.0	03.02 -	103	1998	4	QR20DE	**CL592**	4	CP019	4	pencil
Primera Hatchback (P10)										
1.6	06.90 - 01.96	66	1597	4	GA16DS	**CL509**	1			
1.6	06.90 - 06.93	71	1597	4	GA16DS	**CL509**	1			
2.0	06.90 - 04.93	105	1998	4	SR20DE	**CL509**	1			
2.0	06.90 - 01.96	110	1998	4	SR20DE	**CL509**	1			
2.0 16V	06.90 - 01.96	85	1998	4	SR20DI	**CL509**	1			
2.0 16V 4x4	04.91 - 06.96	85	1998	4	SR20DI	**CL509**	1			
2.0 GT 4x4	03.91 - 04.93	105	1998	4	SR20DE	**CL509**	1			
2.0 i	01.95 - 06.96	92	1998	4	SR20DE	**CL509**	1			

model	year	kW	cm³	cyl	engine	coil	pcs	boot	pcs	info
NISSAN										
Primera Hatchback (P11)										
1.6 16V	09.00 - 07.02	78	1597	4	QG16DE	**CL511**	4	CP049	4	pencil
1.8 16V	08.99 - 07.02	84	1769	4	QG18DE	**CL511**	4	CP049	4	pencil
Primera Hatchback (P12)										
1.6	07.02 -	78	1597	4	QG16DE	**CL511**	4	CP049	4	pencil
1.6	07.02 -	80	1597	4	QG16DE	**CL511**	4	CP049	4	pencil
1.8	07.02 -	85	1769	4	QG18DE	**CL511**	4	CP049	4	pencil
2.0	07.02 -	103	1998	4	QR20DE	**CL592**	4	CP019	4	pencil
Primera Traveller (W10)										
1.6 i	07.90 - 03.98	66	1597	4	GA16DS	**CL509**	1			
2.0	07.94 - 01.98	110	1998	4	SR20DE	**CL509**	1			
2.0 i	07.90 - 03.98	85	1998	4	SR20DI	**CL509**	1			
Primera Traveller (WP11)										
1.8 16V	08.99 - 12.01	84	1769	4	QG18DE	**CL511**	4	CP049	4	pencil
Pulsar CC (C13)										
1.6 DIG-T	02.15 -	140	1618	4	MR16DDT	**CL900**	4			pencil
Qashqai / Qashqai +2 (J10, JJ10)										
1.6	02.07 -	84	1598	4	HR16DE	**CL554**	4	CP050	4	pencil
1.6	11.10 -	86	1598	4	HR16DE	**CL911**	4	CP019	4	pencil
2.0	02.07 -	104	1997	4	MR20DE	**CL911**	4	CP019	4	pencil
								CP051	4	for 2nd coil
2.0 Allrad	02.07 -	104	1997	4	MR20DE	**CL911**	4	CP019	4	pencil
								CP051	4	for 2nd coil
Serena (C23M)										
1.6 16V	02.93 - 09.01	71	1597	4	GA16DE	**CL509**	1			
2.0 16V	11.92 - 09.01	93	1998	4	SR20DE	**CL509**	1			
Sunny II (N13)										
1.6 i	06.86 - 10.90	54	1597	4	E16i	**CL558**	1			
1.6 i 4x4	06.86 - 10.90	54	1597	4	E16i	**CL558**	1			
Sunny II Hatchback (N13)										
1.6 i	06.86 - 10.90	54	1597	4	E16i	**CL558**	1			
Sunny III (N14)										
1.4 i	10.90 - 05.95	55	1392	4	GA14DS	**CL509**	1			
1.6 i	10.90 - 05.95	66	1597	4	GA16DS	**CL509**	1			
1.6 i 16V 4WD	10.90 - 05.95	66	1597	4	GA16DS	**CL509**	1			
Sunny III Hatchback (N14)										
1.4	10.90 - 06.95	60	1392	4	GA14DS	**CL509**	1			
1.4 i	10.90 - 05.95	55	1392	4	GA14DS	**CL509**	1			
1.6 i	10.90 - 05.95	66	1597	4	GA16DS	**CL509**	1			
2.0 GTI 16V	10.90 - 05.95	105	1998	4	SR20DE	**CL509**	1			
2.0 GTI-R 4x4	10.90 - 05.95	162	1998	4	SR20DET	**CL509**	1			
Sunny III Liftback (N14)										
1.4 i	10.90 - 05.95	55	1392	4	GA14DS	**CL509**	1			
1.6 i	10.90 - 05.95	66	1597	4	GA16DS	**CL509**	1			
2.0 i 16V	10.90 - 05.95	105	1998	4	SR20DE	**CL509**	1			
Sunny III Traveller (Y10)										
1.6 16V 4x4	11.90 - 05.95	66	1597	4	GA16DS	**CL509**	1			
1.6 i	06.91 - 03.00	66	1597	4	GA16DS	**CL509**	1			
Teana I (J31)										
2.0	10.03 - 06.08	103	1998	4	QR20DE	**CL592**	4	CP019	4	pencil
Terrano I (WD21)										
3.0 i 4WD	01.90 - 12.95	109	2960	6	VG30E	**CL509**	1			
Terrano II (R20)										
2.4 i 12V 4WD	02.93 - 06.96	91	2389	4	KA24E	**CL509**	1			
Tiida CC (C11X)										
1.6	09.07 -	81	1598	4	HR16DE	**CL554**	4	CP050	4	pencil
1.8	09.07 -	93	1798	4	MR18DE	**CL554**	4	CP050	4	pencil
Tiida Sedan (SC11X)										
1.6	09.07 -	81	1598	4	HR16DE	**CL554**	4	CP050	4	pencil
1.8	09.07 -	93	1798	4	MR18DE	**CL554**	4	CP050	4	pencil
X-Trail (T30)										
2.0	07.01 -	103	1998	4	QR20DE	**CL592**	4	CP019	4	pencil
2.0 4x4	07.01 -	103	1998	4	QR20DE	**CL592**	4	CP019	4	pencil
2.5 4x4	09.02 -	121	2488	4	QR25DE	**CL592**	4	CP019	4	pencil
X-Trail (T31)										
2.0	06.08 -	103	1998	4	MR20DE	**CL554**	4	CP050	4	pencil
2.0	06.07 -	104	1997	4	MR20DE	**CL554**	4	CP050	4	pencil
2.0 FWD	06.08 -	103	1998	4	MR20DE	**CL554**	4	CP050	4	pencil
2.0 FWD	03.07 -	104	1997	4	MR20DE	**CL554**	4	CP050	4	pencil
2.5 4x4	06.07 -	124	2488	4	QR25DE	**CL911**	4	CP019	4	1st pencil / year
	09.07 -	124	2488	4	QR25DE	**CL592**	4	CP019	4	2nd pencil / year

OPEL (VAUXHALL) ▶

model	year	kW	cm³	cyl	engine	coil	pcs	boot	pcs	info
OPEL (VAUXHALL)										
Adam										
1.0	07.13 -	50	996	3		**CL243**	3			pencil
1.0	07.14 -	66	999	3	B 10 XFL	**CL243**	3			pencil
1.0	07.14 -	85	999	3	B 10 XFT	**CL243**	3			pencil
1.2	10.12 -	51	1229	4	A 12 XEL	**CL238**	1			rail coil
1.2	07.13 -	69	1242	4		**CL238**	1			rail coil
1.4	10.12 -	64	1398	4	A 14 XEL	**CL238**	1			rail coil
1.4	10.12 -	74	1398	4	A 14 XER	**CL238**	1			rail coil
1.4 LPG	07.13 -	64	1398	4	A 14 XEL	**CL238**	1			rail coil
Agila (A) (H00)										
1.0	08.03 - 12.07	44	998	3	Z 10 XEP	**CL217**	1	CP063	3	rail coil
1.0 12V	09.00 - 12.07	43	973	3	Z 10 XE	**CL213**	1	CP063	3	rail coil
1.2 16V	09.00 - 12.07	55	1199	4	Z 12 XE	**CL214**	1	CP063	4	rail coil
1.2 16V Twinport	07.04 - 12.07	59	1229	4	Z 12 XEP	**CL215**	1	CP063	4	rail coil
Agila (B) (H08)										
1.0	07.11 -	50	996	3	K10B	**CL236**	3			pencil
1.0	04.08 -	48	996	3	K10B	**CL236**	3			pencil
1.0 LPG	01.10 -	48	996	3	K10B	**CL236**	3			pencil
1.2	04.08 -	63	1242	4	K12B	**CL236**	4			pencil
1.2	11.10 -	69	1242	4	K12B	**CL236**	4			pencil
1.2 LPG	04.08 -	63	1242	4	K12B	**CL236**	4			pencil
Ampera										
EV 150	11.11 -	111			A 14 XFL	**CL238**	1			rail coil
Antara										
2.4	09.08 -	103	2405	4	Z 24 XE	**CL220**	1			
2.4	05.06 -	104	2405	4	Z 24 XED	**CL220**	1			
2.4	12.10 -	123	2384	4	A 24 XE	**CL237**	4			pencil
2.4 4x4	12.10 -	123	2384	4	A 24 XE	**CL237**	4			pencil
3.0	11.10 -	190	2997	6	A 30 XH	**CL245**	6			pencil
3.2 V6	03.07 -	167	3195	6	Z 32 SEE/10 HM	**CL245**	6			pencil
Ascona C (81_, 86_, 87_, 88_)										
1.3 N	09.81 - 08.86	44	1297	4	13 N	**CL205**	1			
1.3 S	09.81 - 08.88	55	1297	4	13 S	**CL205**	1			
1.6	09.81 - 09.87	55	1598	4	16 N	**CL205**	1			
1.6 i	09.87 - 08.88	55	1598	4	E 16 NZ/E 16 LZ	**CL205**	1			
1.6 i cat	09.86 - 08.88	55	1598	4	C 16 NZ/C 16 LZ	**CL205**	1			
Ascona C CC (84_, 89_)										
1.3 S	09.81 - 08.88	55	1297	4	13 S	**CL205**	1			
1.6	09.81 - 08.88	55	1598	4	16 N	**CL205**	1			
1.6 i	09.87 - 08.88	55	1598	4	E 16 NZ	**CL205**	1			
1.6 i cat	09.86 - 08.88	55	1598	4	C 16 NZ/C 16 LZ	**CL205**	1			
Astra F (56_, 57_)										
1.4	09.91 - 09.93	55	1389	4	14 NV	**CL206**	1			
1.4	05.93 - 09.98	60	1389	4	14 SE	**CL206**	1			with distributor
	11.94 - 09.98	60	1389	4	14 SE	**CL200**	1			without distributor
1.4 i	09.91 - 09.98	44	1389	4	C 14 NZ/X 14 NZ	**CL206**	1			
1.4 i 16V	02.96 - 09.98	66	1389	4	X 14 XE	**CL200**	1			
1.4 Si	03.92 - 09.98	60	1389	4	C 14 SE	**CL206**	1			with distributor
	11.94 - 09.98	60	1389	4	C 14 SE	**CL200**	1			without didtributor
1.6	09.95 - 09.98	55	1598	4	16 NZR/16 LZ2	**CL206**	1			
1.6 i	05.93 - 07.96	52	1598	4	X 16 SZ	**CL200**	1			
1.6 i	03.92 - 09.98	55	1598	4	X 16 SZR	**CL200**	1			without distributor / engine code
				4	C 16 NZ	**CL205**	1			with distributor / engine code
1.6 i 16V	08.94 - 09.98	74	1598	4	X 16 XEL	**CL200**	1			
1.6 Si	05.92 - 12.94	74	1598	4	C 16 SE	**CL200**	1			
1.8 i	03.92 - 09.98	66	1796	4	C 18 NZ	**CL206**	1			
1.8 i 16V	11.94 - 09.98	85	1799	4	C 18 XEL/X 18 XE	**CL207**	1			
1.8 i 16V	09.95 - 08.97	85	1796	4	C 18 SEL	**CL207**	1			
1.8 i 16V	06.93 - 10.94	92	1799	4	C 18 XE	**CL207**	1			
2.0 i 16V	02.95 - 09.98	100	1998	4	X 20 XEV	**CL207**	1			
Astra F Cabriolet (53_B)										
1.4 i 16V	01.96 - 03.01	66	1389	4	X 14 XE	**CL200**	1			
1.4 Si	05.93 - 03.01	60	1389	4	C 14 SE	**CL206**	1			with distributor
	11.94 - 03.01	60	1389	4	C 14 SE	**CL200**	1			without distributor
1.6 i	03.93 - 08.96	52	1598	4	X 16 SZ	**CL200**	1			
1.6 i	01.96 - 03.01	55	1598	4	X 16 SZR	**CL200**	1			
1.8 i 16V	11.94 - 03.01	85	1799	4	C 18 XEL/X 18 XE	**CL207**	1			
Astra F Caravan (51_, 52_)										
1.4	09.91 - 09.93	55	1389	4	14 NV	**CL206**	1			
1.4	09.92 - 01.98	60	1389	4	14 SE	**CL200**	1			without distributor
						CL206	1			with distributor
1.4 i	09.91 - 01.98	44	1389	4	C 14 NZ	**CL206**	1			

OPEL (Vauxhall) Astra F Caravan (51_, 52_) ▶

model	year	kW	cm³	cyl	engine	coil	pcs	boot	pcs	info
OPEL (VAUXHALL)										
Astra F Caravan (51_, 52_)										
1.4 i 16V	02.96 - 01.98	66	1389	4	X 14 XE	**CL200**	1			
1.4 Si	05.93 - 01.98	60	1389	4	C 14 SE	**CL206**	1			with distributor
	11.94 - 01.98	60	1389	4	C 14 SE	**CL200**	1			without distributor
1.6	09.95 - 01.98	55	1598	4	16 LZ2/16 NZR	**CL200**	1			
1.6 i	05.93 - 07.96	52	1598	4	X 16 SZ	**CL200**	1			
1.6 i	09.91 - 01.98	55	1598	4	X 16 SZR	**CL200**	1			PIN
			1598	4	X 16 SZR	**CL205**	1			SAE
1.6 i 16V	08.94 - 01.98	74	1598	4	X 16 XEL	**CL200**	1			
1.6 Si	03.92 - 12.94	74	1598	4	C 16 SE	**CL200**	1			
1.8 i	09.91 - 01.98	66	1796	4	C 18 NZ	**CL206**	1			
1.8 i 16V	07.94 - 01.98	85	1799	4	C 18 XEL/X 18 XE	**CL207**	1			
1.8 i 16V	06.93 - 01.98	92	1799	4	C 18 XE	**CL207**	1			
2.0 i 16V	02.95 - 01.98	100	1998	4	X 20 XEV	**CL207**	1			
2.0 i 16V	03.93 - 01.98	110	1998	4	C 20 XE	**CL208**	1			with distributor
						CL219	1			without distributor
Astra F CC (53_, 54_, 58_, 59_)										
1.4	09.91 - 09.93	55	1389	4	14 NV	**CL206**	1			
1.4	09.92 - 01.98	60	1389	4	14 SE	**CL200**	1			without distributor
						CL206	1			with distributor
1.4 i	03.92 - 01.98	44	1389	4	C 14 NZ	**CL206**	1			
1.4 i 16V	01.96 - 01.98	66	1389	4	X 14 XE	**CL200**	1			
1.4 Si	03.92 - 01.98	60	1389	4	C 14 SE	**CL200**	1			without distributor
						CL206	1			with distributor
1.6	09.95 - 01.98	55	1598	4	16 NZR/16 LZ2	**CL206**	1			
1.6 i	05.93 - 07.96	52	1598	4	X 16 SZ	**CL200**	1			
1.6 i	09.91 - 01.98	55	1598	4	X 16 SZR	**CL200**	1			without distributor
						CL205	1			with distributor
1.6 i 16V	08.94 - 01.98	74	1598	4	X 16 XEL	**CL200**	1			
1.6 Si	03.92 - 12.94	74	1598	4	C 16 SE	**CL200**	1			
1.8 i	09.91 - 01.98	66	1796	4	C 18 NZ	**CL206**	1			
1.8 i 16V	09.94 - 01.98	85	1799	4	C 18 XEL/X 18 XE	**CL207**	1			
1.8 i 16V	06.93 - 08.94	92	1799	4	C 18 XE	**CL207**	1			
2.0 GSI 16V	09.91 - 01.98	110	1998	4	C 20 XE	**CL208**	1			with distributor
						CL219	1			without distributor
2.0 i 16V	02.95 - 01.98	100	1998	4	X 20 XEV	**CL207**	1			
Astra F Classic Caravan										
1.4 i	01.98 - 01.05	44	1389	4	X 14 NZ	**CL206**	1			
1.6 i	01.98 - 01.05	55	1598	4	X 16 SZR	**CL200**	1			
1.6 i 16V	01.98 - 01.05	74	1598	4	X 16 XEL	**CL200**	1			
Astra F Classic CC										
1.4 i	01.98 - 08.02	44	1389	4	X 14 NZ	**CL206**	1			
1.6 i	01.98 - 08.02	55	1598	4	X 16 SZR	**CL200**	1			
1.6 i 16V	01.98 - 08.02	74	1598	4	X 16 XEL	**CL200**	1			
Astra F Classic Sedan										
1.4 i	01.98 - 08.02	44	1389	4	X 14 NZ	**CL206**	1			
1.6 i	01.98 - 08.02	55	1598	4	X 16 SZR	**CL200**	1			
1.6 i 16V	01.98 - 08.02	74	1598	4	X 16 XEL	**CL200**	1			
Astra F Van (55_)										
1.4 i	10.91 - 01.99	44	1389	4	C 14 NZ	**CL206**	1			
1.6 i	10.91 - 04.93	55	1598	4	C 16 NZ	**CL205**	1			
1.6 i	02.93 - 07.96	52	1598	4	X 16 SZ	**CL200**	1			
Astra G Cabriolet (F67)										
1.6	01.03 - 10.05	76	1598	4	Z 16 XEP	**CL221**	1	CP062	4	rail coil
1.6 16V	03.01 - 10.05	74	1598	4	Z 16 XE	**CL202**	1			rail coil
1.8 16V	03.01 - 10.05	92	1796	4	Z 18 XE	**CL203**	1	CP060	4	rail coil
2.0 16V Turbo	11.02 - 10.05	147	1998	4	Z 20 LET	**CL218**	1	CP071	4	rail coil
2.0 OPC	03.02 - 10.05	141	1998	4	Z 20 LET	**CL218**	1	CP071	4	rail coil
2.2 16V	03.01 - 10.05	108	2198	4	Z 22 SE	**CL224**	1	CP058	4	rail coil
Astra G Caravan (F35_)										
1.2 16V	02.98 - 09.00	48	1199	4	X 12 XE	**CL214**	1	CP063	4	rail coil
1.2 16V	09.00 - 07.04	55	1199	4	Z 12 XE	**CL214**	1	CP063	4	rail coil
1.4	09.07 - 12.09	66	1364	4	Z 14 XEP	**CL215**	1	CP063	4	rail coil
1.4 16V	06.98 - 07.04	66	1389	4	X 14 XE/Z 14 XE	**CL200**	1			coil 4xPIN
						CL202	1			rail coil
1.6	02.98 - 09.00	55	1598	4	X 16 SZR	**CL200**	1			
1.6	09.00 - 07.04	62	1598	4	Z 16 SE	**CL212**	1			
1.6	12.02 - 07.09	76	1598	4	Z 16 XEP	**CL221**	1	CP062	4	rail coil
1.6 16V	02.98 - 07.04	74	1598	4	Z 16 XE/X 16 XEL	**CL202**	1			rail coil
1.6 CNG	03.03 - 07.04	71	1598	4	Z 16 YNG	**CL202**	1			rail coil
1.8 16V	02.98 - 09.00	85	1796	4	X 18 XE1	**CL203**	1	CP060	4	rail coil
1.8 16V	09.00 - 07.04	92	1796	4	Z 18 XE	**CL203**	1	CP060	4	rail coil

OPEL (Vauxhall) Astra G Caravan (F35_)

model	year	kW	cm³	cyl	engine	coil	pcs	boot	pcs	info
OPEL (VAUXHALL)										
Astra G Caravan (F35_)										
2.0 16V	02.98 - 07.04	100	1998	4	X 20 XEV	**CL207**	1			
2.0 OPC	09.02 - 07.04	141	1998	4	Z 20 LET	**CL218**	1	CP071	4	rail coil
2.0 OPC	11.02 - 07.04	147	1998	4	Z 20 LET	**CL218**	1	CP071	4	rail coil
2.2 16V	03.01 - 07.04	108	2198	4	Z 22 SE	**CL224**	1	CP058	4	rail coil
Astra G CC (F48_, F08_)										
1.2 16V	02.98 - 09.00	48	1199	4	X 12 XE	**CL214**	1	CP063	4	rail coil
1.2 16V	09.00 - 01.05	55	1199	4	Z 12 XE	**CL214**	1	CP063	4	rail coil
1.4	09.07 - 12.09	66	1364	4	Z 14 XEP	**CL215**	1	CP063	4	rail coil
1.4 16V	02.98 - 01.05	66	1389	4	X 14 XE/Z 14 XE	**CL200**	1			coil 4xPIN
						CL202	1			rail coil
1.6	02.98 - 09.00	55	1598	4	X 16 SZR	**CL200**	1			
1.6	09.00 - 01.05	62	1598	4	Z 16 SE	**CL212**	1			
1.6	12.02 - 12.09	76	1598	4	Z 16 XEP	**CL221**	1	CP062	4	rail coil
1.6 16V	02.98 - 01.05	74	1598	4	Z 16 XE/X 16 XEL/C 16 SEL	**CL202**	1			rail coil
1.8 16V	02.98 - 09.00	85	1796	4	X 18 XE1	**CL203**	1	CP060	4	rail coil
1.8 16V	09.00 - 01.05	92	1796	4	Z 18 XE	**CL203**	1	CP060	4	rail coil
2.0 16V	02.98 - 01.05	100	1998	4	X 20 XEV/C 20 SEL	**CL207**	1			
2.0 16V OPC	11.99 - 09.02	118	1998	4	X 20 XER	**CL207**	1			
2.0 OPC	09.02 - 01.05	141	1998	4	Z 20 LET	**CL218**	1	CP071	4	rail coil
2.0 OPC	11.02 - 01.05	147	1998	4	Z 20 LET	**CL218**	1	CP071	4	rail coil
2.2 16V	06.00 - 01.05	108	2198	4	Z 22 SE	**CL224**	1	CP058	4	rail coil
Astra G Coupe (F07_)										
1.6 16V	03.00 - 05.05	76	1598	4	Z 16 XEP	**CL221**	1	CP062	4	rail coil
1.8 16V	03.00 - 10.00	85	1796	4	X 18 XE1	**CL203**	1	CP060	4	rail coil
1.8 16V	09.00 - 05.05	92	1796	4	Z 18 XE	**CL203**	1	CP060	4	rail coil
2.0 16V Turbo	09.00 - 08.01	140	1998	4	Z 20 LET	**CL218**	1	CP071	4	rail coil
2.0 16V Turbo	08.01 - 05.05	141	1998	4	Z 20 LET	**CL218**	1	CP071	4	rail coil
2.0 16V Turbo	11.02 - 05.05	147	1998	4	Z 20 LET	**CL218**	1	CP071	4	rail coil
2.2 16V	09.00 - 05.05	108	2198	4	Z 22 SE	**CL224**	1	CP058	4	rail coil
Astra G Sedan (F69_)										
1.2 16V	09.98 - 09.00	48	1199	4	X 12 XE	**CL214**	1	CP063	4	rail coil
1.2 16V	09.00 - 01.05	55	1199	4	Z 12 XE	**CL214**	1	CP063	4	rail coil
1.4	09.07 - 12.09	66	1364	4	Z 14 XEP	**CL215**	1	CP063	4	rail coil
1.4 16V	09.98 - 01.05	66	1389	4	X 14 XE/Z 14 XE	**CL200**	1			coil 4xPIN
						CL202	1			rail coil
1.6	09.98 - 09.00	55	1598	4	X 16 SZR	**CL200**	1			
1.6	09.00 - 01.05	62	1598	4	Z 16 SE	**CL212**	1			
1.6	12.02 - 12.09	76	1598	4	Z 16 XEP	**CL221**	1	CP062	4	rail coil
1.6 16V	09.98 - 01.05	74	1598	4	Z 16 XE/X 16 XEL	**CL202**	1			rail coil
1.8 16V	09.98 - 09.00	85	1796	4	X 18 XE1	**CL203**	1	CP060	4	rail coil
1.8 16V	06.00 - 01.05	92	1796	4	Z 18 XE	**CL203**	1	CP060	4	rail coil
2.0 16V	09.98 - 01.05	100	1998	4	X 20 XEV	**CL207**	1			
2.2 16V	03.01 - 01.05	108	2198	4	Z 22 SE	**CL224**	1	CP058	4	rail coil
Astra G Van (F70)										
1.6	01.99 - 09.00	55	1598	4	X 16 SZR	**CL200**	1			
1.6	09.00 - 04.05	62	1598	4	Z 16 SE	**CL212**	1			
Astra H (L48)										
1.2	08.05 -	59	1229	4	Z 12 XEP	**CL215**	1	CP063	4	rail coil
1.4	03.04 -	66	1364	4	Z 14 XEP	**CL215**	1	CP063	4	rail coil
1.6	03.04 -	77	1598	4	Z 16 XE1/Z 16 XEP	**CL221**	1	CP062	4	rail coil
1.6	12.06 -	85	1598	4	A 16 XER/Z 16 XER	**CL221**	1	CP062	4	rail coil
1.6 Turbo	02.07 -	132	1598	4	Z 16 LET	**CL221**	1	CP062	4	rail coil
1.8	03.04 -	92	1796	4	Z 18 XE	**CL203**	1	CP060	4	rail coil
1.8	01.06 -	103	1796	4	Z 18 XER/A 18 XER	**CL221**	1	CP062	4	rail coil
2.0 Turbo	03.04 -	125	1998	4	Z 20 LEL	**CL218**	1	CP071	4	rail coil
2.0 Turbo	09.04 -	147	1998	4	Z 20 LER	**CL218**	1	CP071	4	rail coil
2.0 Turbo	03.05 -	177	1998	4	Z 20 LEH	**CL218**	1	CP071	4	rail coil
Astra H Caravan (L35)										
1.4	08.04 -	55	1364	4	Z 14 XEL	**CL215**	1	CP063	4	rail coil
1.4	08.04 -	66	1364	4	Z 14 XEP	**CL215**	1	CP063	4	rail coil
1.4 LPG	08.09 -	66	1364	4	Z 14 XEP	**CL215**	1	CP063	4	rail coil
1.6	08.04 -	77	1598	4	Z 16 XE1/Z 16 XEP	**CL221**	1	CP062	4	rail coil
1.6	12.06 -	85	1598	4	A 16 XER/Z 16 XER	**CL221**	1	CP062	4	rail coil
1.6 Turbo	02.07 -	132	1598	4	Z 16 LET	**CL221**	1	CP062	4	rail coil
1.8	08.04 -	92	1796	4	Z 18 XE	**CL203**	1	CP060	4	rail coil
1.8	08.05 -	103	1796	4	Z 18 XER/A 18 XER	**CL221**	1	CP062	4	rail coil
2.0 Turbo	08.04 -	125	1998	4	Z 20 LEL	**CL218**	1	CP071	4	rail coil
2.0 Turbo	09.04 -	147	1998	4	Z 20 LER	**CL218**	1	CP071	4	rail coil
Astra H GTC (L08)										
1.2	08.05 -	59	1229	4	Z 12 XEP	**CL215**	1	CP063	4	rail coil
1.4	03.05 -	66	1364	4	Z 14 XEP	**CL215**	1	CP063	4	rail coil

OPEL (Vauxhall) Astra H GTC (L08) ▶

model	year	kW	cm³	cyl	engine	coil	pcs	boot	pcs	info
OPEL (VAUXHALL)										
Astra H GTC (L08)										
1.6	03.05 -	77	1598	4	Z 16 XE1/Z 16 XEP	**CL221**	1	CP062	4	rail coil
1.6	12.06 -	85	1598	4	Z 16 XER	**CL221**	1	CP062	4	rail coil
1.6 Turbo	02.07 -	132	1598	4	Z 16 LET	**CL221**	1	CP062	4	rail coil
1.8	03.05 -	92	1796	4	Z 18 XE	**CL203**	1	CP060	4	rail coil
1.8	01.06 -	103	1796	4	Z 18 XER	**CL221**	1	CP062	4	rail coil
2.0 Turbo	03.05 -	147	1998	4	Z 20 LER	**CL218**	1	CP071	4	rail coil
2.0 Turbo	03.05 -	125	1998	4	Z 20 LEL	**CL218**	1	CP071	4	rail coil
2.0 Turbo	08.05 -	177	1998	4	Z 20 LEH	**CL218**	1	CP071	4	rail coil
Astra H TwinTop (L67)										
1.6	09.05 -	77	1598	4	Z 16 XE1/Z 16 XEP	**CL221**	1	CP062	4	rail coil
1.6	12.06 -	85	1598	4	Z 16 XER	**CL221**	1	CP062	4	rail coil
1.6 Turbo	02.07 -	132	1598	4	Z 16 LET	**CL221**	1	CP062	4	rail coil
1.8	09.05 -	92	1796	4	Z 18 XE	**CL203**	1	CP060	4	rail coil
1.8	09.05 -	103	1796	4	Z 18 XER/A 18 XER	**CL221**	1	CP062	4	rail coil
2.0 Turbo	09.05 -	125	1998	4	Z 20 LEL	**CL218**	1	CP071	4	rail coil
2.0 Turbo	09.05 -	147	1998	4	Z 20 LER	**CL218**	1	CP071	4	rail coil
Astra J										
1.4	12.09 -	64	1398	4	A 14 XEL	**CL238**	1			rail coil
1.4	12.09 -	74	1398	4	A 14 XER	**CL238**	1			rail coil
1.4 LPG	01.12 -	103	1364	4	A 14 NET	**CL238**	1			rail coil
1.4 Turbo	10.10 -	88	1364	4	A 14 NEL	**CL238**	1			rail coil
1.4 Turbo	12.09 -	103	1364	4	A 14 NET	**CL238**	1			rail coil
1.6	12.09 -	85	1598	4	A 16 XER	**CL233**	1			1st rail coil / Mot. No. -20SD0231
				4	A 16 XER	**CL244**	1			2nd rail coil / Mot. No. 20SD0232-
1.6 SIDI	12.12 -	125	1598	4	A 16 XHT	**CL240**	4			pencil
1.6 Turbo	12.09 -	132	1598	4	A 16 LET	**CL233**	1			rail coil
Astra J GTC										
1.4	10.11 -	74	1398	4	A 14 XER	**CL238**	1			rail coil
1.4	10.11 -	88	1364	4	B 14 NEL/A 14 NEL	**CL238**	1			rail coil
1.4	10.11 -	103	1364	4	A 14 NET/B 14 NET	**CL238**	1			rail coil
1.6	10.11 -	132	1598	4	A 16 LET	**CL233**	1			rail coil
1.6 SIDI	12.12 -	125	1598	4	A 16 XHT	**CL240**	4			pencil
1.8	10.11 -	103	1796	4	A 18 XER	**CL233**	1			rail coil
2.0	04.12 -	206	1998	4	A 20 NFT	**CL237**	4			pencil
Astra J Sedan										
1.4	06.12 -	74	1398	4	A 14 XER	**CL238**	1			rail coil
1.4 LPG	07.14 -	103	1364	4	A 14 NET	**CL238**	1			rail coil
1.4 Turbo	06.12 -	103	1364	4	A 14 NET/B 14 NET	**CL238**	1			rail coil
1.4 Turbo	06.12 -	88	1364	4	A 14 NEL	**CL238**	1			rail coil
1.6	06.12 -	85	1598	4	A 16 XER	**CL233**	1			1st rail coil / Mot. No. -20SD0231
						CL244	1			2nd rail coil / Mot. No. 20SD0232-
1.6 SIDI	12.12 -	125	1598	4	A 16 XHT	**CL240**	4			pencil
1.6 Turbo	06.12 -	132	1598	4	A 16 LET	**CL233**	1			rail coil
Astra J Sports Tourer										
1.4	10.10 -	74	1398	4	A 14 XER	**CL238**	1			rail coil
1.4 LPG	01.12 -	103	1364	4	A 14 NET	**CL238**	1			rail coil
1.4 Turbo	10.10 -	88	1364	4	A 14 NEL	**CL238**	1			rail coil
1.4 Turbo	10.10 -	103	1364	4	A 14 NET/B 14 NET	**CL238**	1			rail coil
1.6	10.10 -	85	1598	4	A 16 XER	**CL233**	1			1st rail coil / Mot. No. -20SD0231
						CL244	1			2nd rail coil / Mot. No. 20SD0232-
1.6 SIDI	12.12 -	125	1598	4	A 16 XHT	**CL240**	4			pencil
1.6 Turbo	10.10 -	132	1598	4	A 16 LET	**CL233**	1			rail coil
Astra K										
1.0	06.15 -	77	999	3	B 10 XFL	**CL243**	3			pencil
Calibra A (85_)										
2.0 i	06.90 - 07.97	85	1998	4	C 20 NE	**CL208**	1			
2.0 i 4x4	06.90 - 07.97	85	1998	4	C 20 NE	**CL208**	1			
2.0 i 16V	02.94 - 07.97	100	1998	4	X 20 XEV	**CL207**	1			
2.0 i 16V	06.90 - 02.94	110	1998	4	C 20 XE	**CL208**	1			with distributor
						CL219	1			without distributor
2.0 i 16V 4x4	02.94 - 07.97	100	1998	4	X 20 XEV	**CL207**	1			
2.0 i 16V 4x4	06.90 - 02.94	110	1998	4	C 20 XE	**CL208**	1			with distributor
						CL219	1			without distributor
2.5 i V6	04.93 - 07.97	125	2498	6	X 25 XE/C 25 XE	**CL210**	1			
Cascada (W13)										
1.4	03.13 -	88	1362	4	A 14 NEL	**CL238**	1			rail coil
1.4 Turbo	03.13 -	103	1362	4	A 14 NET	**CL238**	1			rail coil
1.6 SIDI	03.13 -	125	1598	4	A 16 XHT	**CL240**	4			pencil
Combo (71_)										
1.2	07.94 - 10.01	33	1195	4	C 12 NZ/X 12 SZ	**CL206**	1			
1.4	07.94 - 10.01	44	1389	4	C 14 NZ/X 14 SZ	**CL206**	1			

OPEL (Vauxhall) Combo (71_) ▶

model	year	kW	cm³	cyl	engine	coil	pcs	boot	pcs	info
OPEL (VAUXHALL)										
Combo (71_)										
1.4	07.94 - 10.01	60	1389	4	C 14 SE	**CL200**	1			
Combo Tour										
1.4	10.04 -	66	1364	4	Z 14 XEP	**CL215**	1	CP063	4	rail coil
1.6	10.01 -	64	1598	4	Z 16 SE	**CL212**	1			
1.6 CNG	06.06 -	69	1598	4	Z 16 YNG	**CL202**	1			rail coil
1.6 CNG	04.05 -	71	1598	4	Z 16 YNG	**CL202**	1			rail coil
Combo Van/Combi										
1.6	10.01 -	64	1598	4	Z 16 SE	**CL212**	1			
1.4 16V	08.05 -	66	1364	4	Z 14 XEP	**CL215**	1	CP063	4	rail coil
1.6 CNG 16V	06.06 -	69	1598	4	Z 16 YNG	**CL202**	1			rail coil
1.6 CNG 16V	04.05 -	71	1598	4	Z 16 YNG	**CL202**	1			rail coil
Corsa A CC (93_, 94_, 98_, 99_)										
1.0	09.82 - 03.93	33	993	4	10 S	**CL228**	1			
1.2	09.82 - 08.90	33	1196	4	E 12 GV/12 NC	**CL206**	1			PIN
						CL228	1			DIN
1.2 i	09.89 - 03.93	33	1195	4	C 12 NZ	**CL206**	1			
1.2 N	01.90 - 03.93	38	1196	4	12 NV	**CL205**	1			
1.2 S	09.82 - 02.90	40	1196	4	12 ST	**CL205**	1			
1.3 GL	09.82 - 03.93	55	1297	4	13 S	**CL205**	1			
1.3 S	09.82 - 10.89	51	1297	4	13 SB	**CL205**	1			
1.4 i	01.90 - 03.93	44	1389	4	C 14 NZ	**CL206**	1			
1.4 S	01.90 - 03.93	53	1389	4	14 NV	**CL206**	1			
1.4 Si	09.91 - 03.93	60	1389	4	C 14 SE	**CL200**	1			without distributor
						CL206	1			with distributor
1.6 GSI	09.89 - 03.93	72	1598	4	C 16 SEI	**CL200**	1			without distributor
						CL206	1			with distributor
1.6 GSI	05.88 - 03.92	74	1598	4	E 16 SE	**CL205**	1			SAE
						CL206	1			PIN
1.6 GSI cat	02.92 - 03.93	74	1598	4	C 16 SE	**CL200**	1			without distributor
						CL206	1			with distributor
Corsa A TR (91_, 92_, 96_, 97_)										
1.0	09.82 - 09.92	33	993	4	10 S	**CL205**	1			SAE
						CL228	1			DIN
1.2 i	09.89 - 03.93	33	1195	4	C 12 NZ	**CL206**	1			
1.2 N	01.85 - 10.87	33	1196	4	E 12 GV/12 NC	**CL228**	1			
1.2 S	09.82 - 03.93	40	1196	4	12 ST	**CL205**	1			
1.2 S	09.82 - 10.87	43	1196	4	12 S	**CL205**	1			
1.3 GL	09.82 - 03.93	55	1297	4	13 S	**CL205**	1			
1.3 S	09.82 - 10.87	51	1297	4	13 SB	**CL205**	1			
1.4 i	10.89 - 03.93	44	1389	4	C 14 NZ	**CL206**	1			
Corsa A Van										
1.0	02.86 - 04.89	33	993	4	10 S	**CL205**	1			SAE
						CL228	1			DIN
1.2	02.86 - 04.89	33	1196	4	E 12 GV/12 NC	**CL228**	1			
1.2	02.86 - 04.89	40	1196	4	12 ST	**CL205**	1			
1.2	02.86 - 07.90	44	1196	4	12 S	**CL205**	1			
1.3	02.86 - 04.89	51	1297	4	13 SB	**CL205**	1			
Corsa B (73_, 78_, 79_)										
1.0 i 12V	11.96 - 09.00	40	973	3	X 10 XE	**CL213**	1	CP063	3	rail coil
1.2 i	03.93 - 09.00	33	1195	4	X 12 SZ	**CL200**	1			without distributor
						CL206	1			with distributor
1.2 i	03.93 - 09.00	33	1195	4	12 NZ	**CL206**	1			
1.2 i 16V	03.98 - 09.00	48	1199	4	X 12 XE	**CL214**	1	CP063	4	rail coil
1.4 i	03.93 - 09.00	44	1389	4	X 14 SZ	**CL200**	1			without distributor
				4	C 14 NZ	**CL206**	1			with distributor / engine code
1.4 i 16V	08.97 - 09.00	63	1389	4	C 14 SEL	**CL200**	1			
1.4 i 16V	09.94 - 09.00	66	1389	4	X 14 XE	**CL200**	1			
1.4 i 16V	09.94 - 09.00	67	1389	4	X 14 XE	**CL200**	1			
1.4 Si	03.93 - 09.00	60	1389	4	C 14 SE	**CL200**	1			
1.6 GSI 16V	03.93 - 09.00	80	1598	4	C 16 XE	**CL200**	1			
1.6 i 16V	08.97 - 09.00	74	1598	4	C 16 SEL	**CL200**	1			
1.6 i 16V	09.94 - 09.00	78	1598	4	X 16 XE	**CL200**	1			
Corsa B Van (73_)										
1.4 i	08.99 - 09.00	44	1389	4	C 14 NZ/X 14 SZ	**CL200**	1			
Corsa C (F08, F68)										
1.0	09.00 - 06.03	43	973	3	Z 10 XE	**CL213**	1	CP063	3	rail coil
1.0	06.03 - 12.09	44	998	3	Z 10 XEP	**CL217**	1	CP063	3	rail coil
1.2	09.00 - 12.09	55	1199	4	Z 12 XE	**CL214**	1	CP063	4	1st rail coil OEM No. 1208012
						CL215	1	CP063	4	2nd rail coil OEM No. 1208020
1.2 Twinport	07.04 - 12.09	59	1229	4	Z 12 XEP	**CL215**	1	CP063	4	rail coil
1.4	09.00 - 12.09	66	1389	4	Z 14 XE	**CL202**	1			rail coil

OPEL (Vauxhall) Corsa C (F08, F68) ▶

model	year	kW	cm³	cyl	engine	coil	pcs	boot	pcs	info
OPEL (VAUXHALL)										
Corsa C (F08, F68)										
1.4 Twinport	06.03 - 12.09	66	1364	4	Z 14 XEP	**CL215**	1	CP063	4	rail coil
1.8	09.00 - 12.09	92	1796	4	Z 18 XE	**CL203**	1	CP060	4	rail coil
Corsa C Van (F08, W5L)										
1.2	07.05 -	59	1229	4	Z 12 XEP	**CL215**	1	CP063	4	rail coil
1.2 16V	09.00 -	55	1199	4	Z 12 XE	**CL214**	1	CP063	4	1st rail coil OEM No. 1208012
						CL215	1	CP063	4	2nd rail coil OEM No. 1208020
1.4	08.03 -	66	1364	4	Z 14 XEP	**CL215**	1	CP063	4	rail coil
Corsa D										
1.0	07.06 -	44	998	3	Z 10 XEP	**CL217**	1	CP063	3	rail coil
1.0	01.10 -	48	998	3	A 10 XEP	**CL242**	1			rail coil
1.2	06.10 -	51	1229	4	A 12 XEL	**CL238**	1			rail coil
1.2	07.06 -	59	1229	4	Z 12 XEP	**CL215**	1	CP063	4	rail coil
1.2	06.10 -	63	1229	4	A 12 XER	**CL238**	1			rail coil
1.2 LPG	09.09 -	59	1229	4	Z 12 XEP	**CL215**	1	CP063	4	rail coil
1.2 LPG	06.11 -	61	1229	4	A 12 XER	**CL238**	1			rail coil
1.2 LPG	08.11 -	63	1229	4	A 12 XER	**CL238**	1			rail coil
1.4	09.09 -	64	1398	4	A 14 XEL	**CL238**	1			rail coil
1.4	07.06 -	66	1364	4	Z 14 XEP	**CL215**	1	CP063	4	rail coil
1.4	06.10 -	74	1398	4	A 14 XER	**CL238**	1			rail coil
1.4	07.12 -	88	1364	4	A 14 NEL	**CL238**	1			rail coil
1.4 LPG	09.09 -	64	1398	4	A 14 XEL	**CL238**	1			rail coil
1.4 LPG	07.06 -	66	1364	4	Z 14 XEP	**CL215**	1	CP063	4	rail coil
1.6 Turbo	02.07 -	110	1598	4	Z 16 LEL/A 16 LEL	**CL221**	1	CP062	4	rail coil
1.6 Turbo	02.07 -	141	1598	4	B 16 LER/A 16 LER/Z 16 LER	**CL221**	1	CP062	4	rail coil
Corsa D Van										
1.0	07.06 -	44	998	3	A 10 XEP	**CL242**	1			rail coil
1.0	01.10 -	48	998	3	A 10 XEP	**CL242**	1			rail coil
1.2	06.10 -	51	1229	4	A 12 XEL	**CL215**	1	CP063	4	rail coil
1.2	07.09 -	59	1229	4	Z 12 XEP	**CL215**	1	CP063	4	rail coil
1.2	06.10 -	63	1229	4	A 12 XER	**CL215**	1	CP063	4	rail coil
Corsa E										
1.0	09.14 -	66	998	3	B 10 XFL	**CL243**	3			pencil
1.0	09.14 -	85	998	3	B 10 XFT	**CL243**	3			pencil
1.2	09.14 -	51	1229	4	B 12 XEL	**CL238**	1			rail coil
1.4	09.14 -	55	1398	4	B 14 XEJ	**CL238**	1			rail coil
1.4	09.14 -	66	1398	4	B 14 XEL	**CL238**	1			rail coil
1.4 LPG	03.15 -	66	1398	4	B 14 XEL	**CL238**	1			rail coil
1.4 Turbo	09.14 -	74	1364	4	B 14 NEJ	**CL238**	1			rail coil
1.4 Turbo	03.15 -	110	1364	4	B 14 NEH	**CL238**	1			rail coil
1.6 Turbo	03.15 -	152	1598	4	B 16 LES	**CL233**	1			rail coil
Corsa E Van										
1.2	01.15 -	51	1229	4	B 12 XEL	**CL238**	1			rail coil
Frontera A (5_MWL4)										
2.2 i	03.95 - 10.98	100	2198	4	X 22 XE	**CL219**	1			
2.4 i	03.92 - 10.98	92	2410	4	C 24 NE	**CL208**	1			
Frontera A Sport (5_SUD2)										
2.0 i	03.92 - 10.98	85	1998	4	C 20 NE	**CL208**	1			with distributor / engine code
				4	X 20 SE	**CL219**	1			without distributor / engine code
Frontera B (6B_)										
2.2 i	10.98 -	100	2198	4	X 22 SE/Y 22 SE	**CL201**	1			
GT Cabriolet										
2.0	06.07 -	194	1998	4	LNF/Z 20 NHH	**CL237**	4			pencil
Insignia										
1.4	04.11 -	103	1364	4	A 14 NET	**CL238**	1			rail coil
1.4 LPG	07.12 -	103	1364	4	A 14 NET	**CL238**	1			rail coil
1.6	07.08 -	85	1598	4	A 16 XER	**CL233**	1			rail coil
1.6 SIDI	03.13 -	125	1598	4	A 16 XHT	**CL240**	4			pencil
1.6 Turbo	07.08 -	132	1598	4	A 16 LET	**CL221**	1	CP062	4	rail coil
1.8	07.08 -	103	1796	4	A 18 XER	**CL233**	1			rail coil
2.0 E85 Turbo	09.10 -	162	1998	4	A 20 NHT	**CL237**	4			pencil
2.0 Turbo	07.08 -	162	1998	4	A 20 NHT	**CL237**	4			pencil
2.0 Turbo 4x4	07.08 -	162	1998	4	A 20 NHT	**CL237**	4			pencil
2.0 Turbo 4x4	09.11 -	184	1998	4	A 20 NFT	**CL237**	4			pencil
2.8 V6 Turbo 4x4	07.08 -	191	2792	6	A 28 NET	**CL245**	6			pencil
2.8 V6 Turbo OPC 4x4	07.09 -	239	2792	6	A 28 NER	**CL245**	6			pencil
Insignia Caravan										
1.4	09.11 -	103	1364	4	A 14 NET	**CL238**	1			rail coil
1.4 LPG	07.12 -	103	1364	4	A 14 NET	**CL238**	1			rail coil
1.6	07.08 -	85	1598	4	A 16 XER	**CL233**	1			rail coil
1.6 SIDI	03.13 -	125	1598	4	A 16 XHT	**CL240**	4			pencil
1.6 Turbo	01.09 -	132	1598	4	A 16 LET	**CL221**	1	CP062	4	rail coil

OPEL (Vauxhall) Insignia Caravan ▶

model	year	kW	cm³	cyl	engine	coil	pcs	boot	pcs	info
OPEL (VAUXHALL)										
Insignia Caravan										
1.8	07.08 -	103	1796	4	A 18 XER	**CL233**	1			rail coil
2.0 E85 Turbo	09.10 -	162	1998	4	A 20 NHT	**CL237**	4			pencil
2.0 Turbo	07.08 -	162	1998	4	A 20 NHT	**CL237**	4			pencil
2.0 Turbo 4x4	07.08 -	162	1998	4	A 20 NHT	**CL237**	4			pencil
2.0 Turbo 4x4	09.11 -	184	1998	4	A 20 NFT	**CL237**	4			pencil
2.8 V6 Turbo 4x4	10.08 -	191	2792	6	A 28 NET	**CL245**	6			pencil
2.8 V6 Turbo OPC 4x4	07.09 -	239	2792	6	A 28 NER	**CL245**	6			pencil
Insignia Sedan										
1.4	04.11 -	103	1364	4	A 14 NET	**CL238**	1			rail coil
1.4 LPG	07.12 -	103	1364	4	A 14 NET	**CL238**	1			rail coil
1.6	07.08 -	85	1598	4	A 16 XER	**CL233**	1			rail coil
1.6 SIDI	03.13 -	125	1598	4	A 16 XHT	**CL240**	4			pencil
1.6 Turbo	01.09 -	132	1598	4	A 16 LET	**CL221**	1	CP062	4	rail coil
1.8	07.08 -	103	1796	4	A 18 XER	**CL233**	1			rail coil
2.0 Turbo	07.08 -	162	1998	4	A 20 NHT	**CL237**	4			pencil
2.0 Turbo 4x4	07.08 -	162	1998	4	A 20 NHT	**CL237**	4			pencil
2.0 Turbo 4x4	09.11 -	184	1998	4	A 20 NFT	**CL237**	4			pencil
2.0 Turbo E85	07.08 -	162	1998	4	A 20 NHT	**CL237**	4			pencil
2.8 V6 Turbo 4x4	07.08 -	191	2792	6	A 28 NET	**CL245**	6			pencil
2.8 V6 Turbo OPC 4x4	07.09 -	239	2792	6	A 28 NER	**CL245**	6			pencil
Kadett D (31_-34_, 41_-44_)										
1.2	08.79 - 07.82	39	1196	4	12 N	**CL228**	1			
1.2	08.82 - 08.84	40	1196	4	12 ST	**CL228**	1			
1.3 N	08.79 - 08.84	44	1297	4	13 N	**CL205**	1			
1.3 S	08.79 - 08.84	55	1297	4	13 S	**CL205**	1			
Kadett D Caravan (35_, 36_, 45_, 46_)										
1.2	08.79 - 07.82	39	1196	4	12 N	**CL228**	1			
1.3 N	08.79 - 08.84	44	1297	4	13 N	**CL205**	1			
1.3 S	08.79 - 08.84	55	1297	4	13 S	**CL205**	1			
Kadett E (39_, 49_)										
1.2	09.84 - 07.86	40	1196	4	12 SC	**CL228**	1			
1.3 i cat	09.85 - 08.91	44	1297	4	C 13 N	**CL205**	1			
1.3 S	09.84 - 08.87	55	1297	4	13 S	**CL205**	1			
1.4 i	01.90 - 08.91	44	1389	4	C 14 NZ	**CL206**	1			
1.4 S	01.90 - 08.91	55	1389	4	14 NV	**CL206**	1			
1.6 i	09.86 - 08.91	55	1598	4	E 16 NZ	**CL205**	1			
1.6 i cat	09.86 - 08.91	55	1598	4	C 16 NZ/C 16 LZ	**CL205**	1			
1.6 S	09.84 - 08.86	66	1598	4	16 SH	**CL206**	1			
1.8	09.87 - 08.90	84	1796	4	18 E	**CL206**	1			
1.8 i	09.90 - 08.91	66	1796	4	C 18 NZ	**CL206**	1			
1.8 S	09.87 - 08.91	62	1798	4	E 18 NV	**CL208**	1			
2.0 i	03.87 - 08.91	85	1998	4	20 NE/20 SE	**CL208**	1			
2.0 i cat	03.87 - 08.91	85	1998	4	C 20 NE	**CL208**	1			
Kadett E Cabriolet (43B_)										
1.3 S	03.87 - 02.93	55	1297	4	13 S	**CL205**	1			
1.4 i	01.90 - 08.91	44	1389	4	C 14 NZ	**CL206**	1			
1.4 S	08.90 - 02.93	55	1389	4	14 NV	**CL206**	1			
1.6 i	10.86 - 02.93	55	1598	4	E 16 NZ	**CL205**	1			
1.6 i	07.89 - 02.93	60	1598	4	16 SV	**CL205**	1			SAE
						CL206	1			PIN
1.6 i cat	10.87 - 02.93	55	1598	4	C 16 NZ/C 16 LZ	**CL205**	1			
2.0 i	10.86 - 02.93	85	1998	4	20 NE	**CL208**	1			
2.0 i cat	10.86 - 02.93	85	1998	4	C 20 NE	**CL208**	1			
Kadett E Caravan (35_, 36_, 45_, 46_)										
1.2	09.84 - 07.86	40	1196	4	12 SC	**CL228**	1			
1.4 i	01.90 - 08.91	44	1389	4	C 14 NZ	**CL206**	1			
1.4 S	01.90 - 08.91	55	1389	4	14 NV	**CL206**	1			
1.6	09.86 - 08.91	60	1598	4	16 SV	**CL206**	1			
1.6 i cat	09.86 - 08.91	55	1598	4	C 16 NZ/C 16 LZ	**CL205**	1			
1.8 i	06.85 - 08.91	66	1796	4	C 18 NZ/C 18 NT	**CL206**	1			
1.8 S	09.87 - 08.91	62	1796	4	E 18 NV	**CL208**	1			
2.0 i	09.87 - 08.91	85	1998	4	20 NE	**CL208**	1			
Kadett E CC (33_, 34_, 43_, 44_)										
1.2	09.84 - 07.86	40	1196	4	12 SC	**CL228**	1			
1.3 N	09.84 - 08.91	44	1297	4	13 NB/13 N	**CL205**	1			
1.3 S	09.84 - 08.87	55	1297	4	13 S	**CL205**	1			
1.4 i	01.90 - 08.91	44	1389	4	C 14 NZ	**CL206**	1			
1.4 S	01.90 - 08.91	55	1389	4	14 NV	**CL206**	1			
1.6 i	09.86 - 08.91	55	1598	4	E 16 NZ	**CL205**	1			
1.6 i cat	09.86 - 08.91	55	1598	4	C 16 NZ/C 16 LZ	**CL205**	1			
1.6 S	09.86 - 08.91	60	1598	4	16 SV	**CL206**	1			

OPEL (Vauxhall) Kadett E CC ▶

model	year	kW	cm³	cyl	engine	coil	pcs	boot	pcs	info
OPEL (VAUXHALL)										
Kadett E CC (33_, 34_, 43_, 44_)										
1.8 i	06.85 - 08.91	66	1796	4	C 18 NZ	**CL206**	1			
1.8 S	09.87 - 08.91	62	1796	4	E 18 NV/S 18 NV	**CL208**	1			
2.0 GSI	09.86 - 08.91	85	1998	4	20 NE	**CL208**	1			
2.0 GSI	09.86 - 08.91	95	1998	4	20 SEH	**CL208**	1			
2.0 GSI cat	09.86 - 08.91	85	1998	4	C 20 NE	**CL208**	1			
Kadett E Combo (38_, 48_)										
1.3 N	01.86 - 12.89	44	1297	4	13 N	**CL205**	1			
1.3 S	01.86 - 12.89	55	1297	4	13 S	**CL205**	1			
1.4 i	08.91 - 07.94	44	1389	4	C 14 NZ	**CL205**	1			SAE
						CL206	1			PIN
1.4 S	07.89 - 08.91	55	1389	4	14 NV	**CL206**	1			
1.6	09.86 - 12.91	60	1598	4	16 SV	**CL206**	1			
1.6 i	08.91 - 07.94	55	1598	4	C 16 NZ	**CL205**	1			
Kadett E Van (37_, 47_)										
1.2	09.84 - 07.86	40	1196	4	12 SC	**CL228**	1			
1.4 i	01.90 - 08.91	44	1389	4	C 14 NZ	**CL206**	1			
1.6 i	08.89 - 09.93	55	1598	4	C 16 NZ	**CL205**	1			
Manta A (58_, 59_)										
1.6	02.75 - 08.75	44	1584	4	16 N	**CL228**	1			
1.6	09.70 - 08.75	50	1584	4	16 N	**CL228**	1			
1.6	02.75 - 08.75	55	1584	4	16 S	**CL228**	1			
1.6 S	09.70 - 08.75	59	1584	4	16 S	**CL228**	1			
1.9 S	09.70 - 08.75	66	1897	4	19 S	**CL228**	1			
Manta B (58_, 59_)										
1.3 S	08.81 - 08.86	55	1297	4	13 S	**CL205**	1			SAE
						CL228	1			DIN
1.6 N	09.75 - 12.80	44	1584	4	16 N	**CL228**	1			
1.6 S	09.75 - 12.81	55	1584	4	16 S	**CL228**	1			
1.8 S	07.82 - 08.87	66	1796	4	18 S	**CL228**	1			
1.9 S	09.75 - 12.80	66	1897	4	19 S	**CL228**	1			
2.0 E	08.77 - 08.88	81	1979	4	20 E	**CL228**	1			
2.0 S	08.77 - 08.84	74	1979	4	20 S	**CL228**	1			
Manta B CC (53_, 55_)										
1.3 S	08.79 - 08.86	55	1297	4	13 S	**CL205**	1			SAE
						CL228	1			DIN
1.6 N	09.75 - 12.80	44	1584	4	16 N	**CL228**	1			
2.0 E	08.77 - 08.88	81	1979	4	20 E	**CL228**	1			
2.0 S	08.77 - 08.84	74	1979	4	20 S	**CL228**	1			
Meriva										
1.4 16V Twinport	07.04 - 05.10	66	1364	4	Z 14 XEP	**CL215**	1	CP063	4	rail coil
1.4 16V Twinport LPG	07.04 - 05.10	66	1364	4	Z 14 XEP	**CL215**	1	CP063	4	rail coil
1.6	05.03 - 05.10	64	1598	4	Z 16 SE	**CL212**	1			
1.6	01.06 - 05.10	77	1598	4	Z 16 XEP	**CL221**	1	CP062	4	rail coil
1.6 16V	05.03 - 01.06	74	1598	4	Z 16 XE	**CL202**	1			rail coil
1.6 Turbo	09.05 - 05.10	132	1598	4	Z 16 LET	**CL221**	1	CP062	4	rail coil
1.8	05.03 - 05.10	92	1796	4	Z 18 XE	**CL203**	1	CP060	4	rail coil
Meriva B										
1.4	06.10 -	74	1398	4	A 14 XER/B 14 XER	**CL238**	1			rail coil
1.4	06.10 -	88	1364	4	B 14 NEL/A 14 NEL	**CL238**	1			rail coil
1.4	06.10 -	103	1364	4	A 14 NET/B 14 NET	**CL238**	1			rail coil
1.4 LPG	06.11 -	88	1364	4	B 14 NEL/A 14 NEL	**CL238**	1			rail coil
Mokka										
1.4	04.13 -	103	1364	4	A 14 NET/B 14 NET	**CL238**	1			rail coil
1.4 4x4	06.12 -	103	1364	4	A 14 NET/B 14 NET	**CL238**	1			rail coil
1.4 LPG	04.13 -	103	1364	4	A 14 NET	**CL238**	1			rail coil
1.6	06.12 -	85	1598	4	A 16 XER	**CL244**	1			rail coil
1.8	01.13 -	103	1796	4	A 18 XER	**CL233**	1			rail coil
1.8 4x4	01.13 -	103	1796	4	A 18 XER	**CL233**	1			rail coil
Monza A (22_)										
2.2 E	11.84 - 08.86	85	2197	4	22 E	**CL205**	1			
Omega A (16_, 17_, 19_)										
1.8	09.87 - 03.94	65	1796	4	E 18 NVR	**CL208**	1			
1.8	09.86 - 03.94	85	1796	4	18 SEH	**CL206**	1			
1.8 N	09.86 - 08.87	60	1796	4	18 NV	**CL208**	1			
1.8 S	09.86 - 03.94	66	1796	4	18 SV	**CL206**	1			
2.0	09.90 - 03.94	73	1998	4	C 20 NEJ	**CL208**	1			
2.0	09.90 - 03.94	74	1998	4	C 20 NEF	**CL208**	1			
2.0	09.86 - 03.94	90	1998	4	20 SE	**CL208**	1			
2.0 i	09.86 - 03.94	85	1998	4	C 20 NE	**CL208**	1			
2.4 i	09.88 - 03.94	92	2410	4	C 24 NE	**CL208**	1			
3.0	03.87 - 12.87	115	2969	6	C 30 LE	**CL208**	1			

OPEL (Vauxhall) Omega A ▶

model	year	kW	cm³	cyl	engine	coil	pcs	boot	pcs	info
OPEL (VAUXHALL)										
Omega A (16_, 17_, 19_)										
3.0	03.87 - 09.90	130	2969	6	30 NE	**CL208**	1			
3.0 cat	03.88 - 03.94	130	2969	6	C 30 NE	**CL208**	1			
3.0 24V	09.89 - 03.94	147	2969	6	C 30 SEJ	**CL208**	1			
3.0 24V	09.89 - 03.94	150	2969	6	C 30 SE	**CL208**	1			
3.0 24V Evolution500	03.91 - 07.92	169	2969	6	C 30 XEI	**CL208**	1			
Omega A Caravan (66_, 67_)										
1.8	09.87 - 03.94	65	1796	4	E 18 NVR	**CL208**	1			
1.8	09.86 - 03.94	85	1796	4	18 SEH	**CL206**	1			
1.8 N	09.86 - 08.87	60	1796	4	18 NV	**CL208**	1			
1.8 S	09.86 - 03.94	66	1796	4	18 SV	**CL206**	1			
2.0	09.90 - 03.94	74	1998	4	C 20 NEF	**CL208**	1			
2.0	09.86 - 03.94	90	1998	4	20 SE	**CL208**	1			
2.0 i	09.90 - 03.94	73	1998	4	C 20 NEJ	**CL208**	1			
2.0 i	09.86 - 03.94	85	1998	4	C 20 NE	**CL208**	1			
2.4 i	09.88 - 03.94	92	2410	4	C 24 NE	**CL208**	1			
3.0	03.87 - 03.94	115	2969	6	C 30 LE	**CL208**	1			
3.0	03.87 - 09.90	130	2969	6	30 NE	**CL208**	1			
3.0 cat	03.87 - 03.94	130	2969	6	C 30 NE	**CL208**	1			
3.0 24V	09.89 - 03.94	147	2969	6	C 30 SEJ	**CL208**	1			
Omega B (25_, 26_, 27_)										
2.0	03.94 - 09.99	85	1998	4	X 20 SE	**CL219**	1			
2.0	03.94 - 12.00	85	1998	4	20 SE	**CL219**	1			
2.0 16V	03.94 - 09.99	100	1998	4	X 20 XEV	**CL207**	1			
2.2 16V	09.99 - 07.03	106	2198	4	Y 22 XE/Z 22 XE	**CL223**	1			rail coil
2.5 V6	03.94 - 09.00	125	2498	6	X 25 XE	**CL209**	1			1st coil type / socket design
						CL210	1			2nd coil type / socket design
						CL222	1			3rd coil type / socket design
2.6 V6	09.00 - 07.03	132	2597	6	Y 26 SE	**CL229**	1	CP059	3	rail coil for cyl 1-3-5
						CL230	1	CP059	3	rail coil for cyl 2-4-6
3.0 V6	04.94 - 02.01	155	2962	6	X 30 XE	**CL209**	1			1st coil type / socket design
						CL210	1			2nd coil type / socket design
						CL222	1			3rd coil type / socket design
3.2 V6	02.01 - 07.03	160	3175	6	Y 32 SE	**CL229**	1	CP059	3	rail coil for cyl 1-3-5
						CL230	1	CP059	3	rail coil for cyl 2-4-6
Omega B Caravan (21_, 22_, 23_)										
2.0	03.94 - 09.99	85	1998	4	X 20 SE	**CL219**	1			
2.0 16V	03.94 - 09.99	100	1998	4	X 20 XEV	**CL207**	1			
2.2 16V	09.99 - 07.03	106	2198	4	Y 22 XE/Z 22 XE	**CL223**	1			rail coil
2.5 V6	03.94 - 09.00	125	2498	6	X 25 XE	**CL209**	1			1st coil type / socket design
						CL210	1			2nd coil type / socket design
						CL222	1			3rd coil type / socket design
2.6 V6	09.00 - 07.03	132	2597	6	Y 26 SE	**CL229**	1	CP059	3	rail coil for cyl 1-3-5
						CL230	1	CP059	3	rail coil for cyl 2-4-6
3.0 V6	04.94 - 02.01	155	2962	6	X 30 XE	**CL209**	1			1st coil type / socket design
						CL210	1			2nd coil type / socket design
						CL222	1			3rd coil type / socket design
3.2 V6	02.01 - 07.03	160	3175	6	Y 32 SE	**CL229**	1	CP059	3	rail coil for cyl 1-3-5
						CL230	1	CP059	3	rail coil for cyl 2-4-6
Senator B (29_)										
2.5 i	09.90 - 09.93	103	2490	6	25 NE	**CL208**	1			
2.6 i	09.90 - 09.93	110	2594	6	C 26 NE	**CL208**	1			
3.0	09.87 - 09.93	115	2969	6	C 30 LE	**CL208**	1			
3.0 24V	09.89 - 09.93	150	2969	6	C 30 SE	**CL208**	1			
Signum										
1.8	05.03 -	90	1796	4	Z 18 XE	**CL203**	1	CP060	4	rail coil
1.8	09.05 -	103	1796	4	Z 18 XER	**CL221**	1	CP062	4	rail coil
2.0 Turbo	05.03 -	129	1998	4	Z 20 NET	**CL235**	4			pencil
2.2 Direct	05.03 -	114	2198	4	Z 22 YH	**CL226**	1			rail coil
2.8 V6 Turbo	09.05 -	169	2792	6	Z 28 NEL	**CL239**	6	CP061	6	pencil
2.8 V6 Turbo	01.06 -	184	2792	6	Z 28 NET	**CL239**	6	CP061	6	pencil
3.2 V6	05.03 -	155	3175	6	Z 32 SE	**CL229**	1	CP059	3	rail coil for cyl 1-3-5
						CL232	1	CP059	3	rail coil for cyl 2-4-6
Speedster										
2.2	09.00 -	108	2198	4	Z 22 SE	**CL224**	1	CP058	4	rail coil
2.0 Turbo	04.03 -	147	1998	4	Z 20 LET	**CL218**	1	CP071	4	rail coil
Tigra (95_)										
1.4 16V	08.97 - 12.00	63	1389	4	X 14 XE	**CL200**	1			
1.4 16V	07.94 - 12.00	66	1389	4	X 14 XE	**CL200**	1			
1.6 16V	08.97 - 08.98	74	1598	4	C 16 SEL	**CL200**	1			
1.6 16V	07.94 - 08.98	78	1598	4	X 16 XE	**CL200**	1			

model	year	kW	cm³	cyl	engine	coil	pcs	boot	pcs	info
OPEL (VAUXHALL)										
Tigra TwinTop										
1.4	06.04 -	66	1364	4	Z 14 XEP	**CL215**	1	CP063	4	rail coil
1.8	06.04 -	92	1796	4	Z 18 XE	**CL203**	1	CP060	4	rail coil
Vectra A (86_, 87_)										
1.6	08.92 - 07.93	51	1598	4	C 16 LZ2	**CL206**	1			
1.6	09.88 - 12.90	60	1598	4	16 SV	**CL205**	1			SAE / year
	01.90 - 05.93	60	1598	4	16 SV	**CL206**	1			PIN / year
1.6 i	09.93 - 11.95	52	1598	4	X 16 SZ	**CL200**	1			
1.6 i	09.88 - 11.95	55	1598	4	C 16 NZ2/C 16 NZ/E 16 NZ	**CL205**	1			
1.6 i	09.93 - 11.95	55	1598	4	16 LZ2	**CL206**	1			
1.8 i cat	03.90 - 11.95	66	1796	4	C 18 NZ	**CL206**	1			
1.8 S	09.88 - 07.89	65	1796	4	E 18 NVR	**CL206**	1			
1.8 S	09.89 - 10.90	66	1796	4	18 SV	**CL206**	1			
1.8 S 4x4	01.89 - 07.89	65	1796	4	E 18 NVR	**CL206**	1			
2.0 i	09.88 - 10.90	85	1998	4	20 NE	**CL208**	1			
2.0 i	09.88 - 09.92	95	1998	4	20 SEH	**CL208**	1			
2.0 i cat	09.88 - 11.95	85	1998	4	C 20 NE	**CL208**	1			
2.0 i 4x4	01.89 - 10.90	85	1998	4	20 NE	**CL208**	1			
2.0 i 4x4	01.89 - 09.92	95	1998	4	20 SEH	**CL208**	1			
2.0 i 4x4 cat	01.89 - 11.95	85	1998	4	C 20 NE	**CL208**	1			
2.0 i 16V	06.94 - 11.95	100	1998	4	X 20 XEV	**CL207**	1			
2.0 i 16V 4x4	06.94 - 11.95	100	1998	4	X 20 XEV	**CL207**	1			
2.0 i Turbo 4x4	06.94 - 11.95	150	1998	4	C 20 LET	**CL208**	1			
2.5 CD 4x4	08.92 - 08.95	125	2498	6	C 25 XE	**CL210**	1			
2.5 V6	02.93 - 11.95	125	2498	6	C 25 XE	**CL210**	1			
2000 16V 4x4	01.89 - 10.90	110	1998	4	20 XEJ	**CL208**	1			
2000/GT 16V	01.89 - 06.94	110	1998	4	20 XEJ	**CL208**	1			
2000/GT 16V cat	02.90 - 11.95	110	1998	4	C 20 XE	**CL208**	1			with distributor
						CL219	1			without distributor
2000/GT 16V 4x4 cat	02.90 - 11.95	110	1998	4	C 20 XE	**CL208**	1			with distributor
						CL219	1			without distributor
Vectra A CC (88_, 89_)										
1.6 i	09.93 - 11.95	52	1598	4	X 16 SZ	**CL200**	1			
1.6 i	09.93 - 11.95	55	1598	4	16 LZ2	**CL206**	1			
1.6 i cat	09.88 - 11.95	55	1598	4	C16NZ	**CL205**	1			SAE
						CL206	1			PIN
1.6 S	09.88 - 12.90	60	1598	4	16 SV	**CL205**	1			year / SAE
	01.90 - 05.93	60	1598	4	16 SV	**CL206**	1			year / PIN
1.8 i	09.88 - 10.90	66	1796	4	18 SV	**CL206**	1			
1.8 i cat	03.90 - 11.95	66	1796	4	C 18 NZ	**CL206**	1			
1.8 S	09.88 - 07.89	65	1796	4	E 18 NVR	**CL206**	1			
2.0	04.88 - 09.89	74	1998	4	C 20 NEF	**CL208**	1			
2.0 i	09.88 - 10.90	85	1998	4	20 NE	**CL208**	1			
2.0 i cat	09.88 - 11.95	85	1998	4	C 20 NE	**CL208**	1			
2.0 i 16V	02.89 - 10.90	110	1998	4	20 XEJ	**CL208**	1			
2.0 i 16V	06.94 - 11.95	100	1998	4	X 20 XEV	**CL207**	1			
2.0 i 16V cat	02.90 - 11.95	110	1998	4	C 20 XE	**CL219**	1			
2.0 i GT	06.90 - 11.95	95	1998	4	20 SEH	**CL208**	1			
2.5 V6	02.93 - 11.95	125	2498	6	C 25 XE	**CL210**	1			
Vectra B (36_)										
1.6 i	10.95 - 04.02	55	1598	4	X 16 SZR	**CL200**	1			
1.6 i	10.95 - 04.02	55	1598	4	16 LZ2	**CL206**	1			
1.6 i 16V	10.95 - 04.02	74	1598	4	Z 16 XE/X 16 XEL/Y 16 XE	**CL200**	1			coil 4xPIN
						CL202	1			rail coil
1.8 i 16V	10.95 - 09.00	85	1796	4	X 18 XE1	**CL203**	1	CP060	4	rail coil
						CL207	1			coil 4xPIN
1.8 i 16V	10.95 - 09.00	85	1799	4	X 18 XE	**CL207**	1			
1.8 i 16V	09.00 - 04.02	92	1796	4	Z 18 XE	**CL203**	1	CP060	4	rail coil
2.0 i	10.95 - 04.02	82	1998	4	20 NEJ	**CL219**	1			
2.0 i 16V	10.95 - 09.00	100	1998	4	X 20 XEV/C 20 SEL	**CL207**	1			
2.2 i 16V	09.00 - 04.02	108	2198	4	Z 22 SE	**CL224**	1	CP058	4	rail coil
2.5 i V6	10.95 - 09.00	125	2498	6	X 25 XE	**CL209**	1			
2.6 i V6	09.00 - 04.02	125	2597	6	Y 26 SE	**CL229**	1	CP059	3	rail coil for cyl 1-3-5
						CL230	1	CP059	3	rail coil for cyl 2-4-6
i 500 2.5	05.98 - 09.00	143	2498	6	X 25 XE	**CL209**	1			
Vectra B Caravan (31_)										
1.6 i	11.96 - 06.00	55	1598	4	X 16 SZR	**CL200**	1			
1.6 i	11.96 - 06.00	55	1598	4	16 LZ2	**CL206**	1			
1.6 i 16V	11.96 - 07.02	74	1598	4	Z 16 XE/X 16 XEL/Y 16 XE	**CL200**	1			coil 4xPIN
						CL202	1			rail coil
1.8 i 16V	11.96 - 09.00	85	1796	4	X 18 XE1	**CL203**	1	CP060	4	rail coil
						CL207	1			coil 4xPIN

OPEL (Vauxhall) Vectra B Caravan (31_) ▶

model	year	kW	cm³	cyl	engine	coil	pcs	boot	pcs	info
OPEL (VAUXHALL)										
Vectra B Caravan (31_)										
1.8 i 16V	11.96 - 09.00	85	1799	4	X 18 XE	**CL207**	1			
1.8 i 16V	09.00 - 07.03	92	1796	4	Z 18 XE	**CL203**	1	CP060	4	rail coil
2.0 i	11.96 - 02.02	82	1998	4	20 NEJ	**CL219**	1			
2.0 i 16V	11.96 - 09.00	100	1998	4	X 20 XEV/C 20 SEL	**CL207**	1			
2.2 i 16V	09.00 - 07.03	108	2198	4	Z 22 SE	**CL224**	1	CP058	4	rail coil
2.5 i V6	11.96 - 09.00	125	2498	6	X 25 XE	**CL209**	1			
2.6 i V6	09.00 - 07.03	125	2597	6	Y 26 SE	**CL229**	1	CP059	3	rail coil for cyl 1-3-5
						CL230	1	CP059	3	rail coil for cyl 2-4-6
i 500 2.5	05.98 - 09.00	143	2498	6	X 25 XE	**CL209**	1			
Vectra B CC (38_)										
1.6 i	10.95 - 07.03	55	1598	4	X 16 SZR	**CL200**	1			
1.6 i	10.95 - 07.03	55	1598	4	16 LZ2	**CL206**	1			
1.6 i 16V	10.95 - 07.02	74	1598	4	Z 16 XE/X 16 XEL/Y 16 XE	**CL200**	1			coil 4xPIN
						CL202	1			rail coil
1.8 i 16V	10.95 - 09.00	85	1796	4	X 18 XE1	**CL203**	1	CP060	4	rail coil
						CL207	1			coil 4xPIN
1.8 i 16V	10.95 - 09.00	85	1799	4	X 18 XE	**CL207**	1			
1.8 i 16V	09.00 - 07.03	92	1796	4	Z 18 XE	**CL203**	1	CP060	4	rail coil
2.0 i	10.95 - 02.02	82	1998	4	20 NEJ	**CL219**	1			
2.0 i 16V	10.95 - 09.00	100	1998	4	X 20 XEV/C 20 SEL	**CL207**	1			
2.2 i 16V	09.00 - 07.03	108	2198	4	Z 22 SE	**CL224**	1	CP058	4	rail coil
2.5 i V6	10.95 - 09.00	125	2498	6	X 25 XE	**CL209**	1			
2.6 i V6	09.00 - 07.03	125	2597	6	Y 26 SE	**CL229**	1	CP059	3	rail coil for cyl 1-3-5
						CL230	1	CP059	3	rail coil for cyl 2-4-6
Vectra C										
1.6	01.06 -	77	1598	4	Z 16 XEP	**CL221**	1	CP062	4	rail coil
1.6 16V	06.04 -	74	1598	4	Z 16 XE	**CL202**	1			rail coil
1.8	04.02 -	81	1796	4	Z 18 XEL	**CL203**	1	CP060	4	rail coil
1.8	01.06 -	103	1796	4	Z 18 XER	**CL221**	1	CP062	4	rail coil
1.8 16V	04.02 -	90	1796	4	Z 18 XE	**CL203**	1	CP060	4	rail coil
2.0 16V Turbo	03.03 -	129	1998	4	Z 20 NET	**CL235**	4			pencil
2.2 16V	04.02 -	108	2198	4	Z 22 SE	**CL224**	1	CP058	4	rail coil
2.2 Direct	10.03 -	114	2198	4	Z 22 YH	**CL226**	1			rail coil
2.8 V6 Turbo	08.05 -	169	2792	6	Z 28 NEL	**CL239**	6	CP061	6	pencil
2.8 V6 Turbo	08.06 -	184	2792	6	Z 28 NET	**CL239**	6	CP061	6	pencil
2.8 V6 Turbo	08.05 -	188	2792	6	Z 28 NET	**CL239**	6	CP061	6	pencil
3.2 V6	08.02 -	155	3175	6	Z 32 SE	**CL229**	1	CP059	3	rail coil for cyl 1-3-5
						CL232	1	CP059	3	rail coil for cyl 2-4-6
Vectra C Caravan										
1.6	01.06 -	77	1598	4	Z 16 XEP	**CL221**	1	CP062	4	rail coil
1.6 16V	06.04 -	74	1598	4	Z 16 XE	**CL202**	1			rail coil
1.8	10.03 -	90	1796	4	Z 18 XE	**CL203**	1	CP060	4	rail coil
1.8	01.06 -	103	1796	4	Z 18 XER	**CL221**	1	CP062	4	rail coil
2.0 Turbo	10.03 -	129	1998	4	Z 20 NET	**CL235**	4			pencil
2.2 Direct	10.03 -	114	2198	4	Z 22 YH	**CL226**	1			rail coil
2.8 V6 Turbo	08.05 -	169	2792	6	Z 28 NEL	**CL239**	6	CP061	6	pencil
2.8 V6 Turbo	01.07 -	184	2792	6	Z 28 NET	**CL239**	6	CP061	6	pencil
2.8 V6 Turbo	08.05 -	188	2792	6	Z 28 NET	**CL239**	6	CP061	6	pencil
2.8 V6 Turbo	01.07 -	206	2792	6	Z 28 NET	**CL239**	6	CP061	6	pencil
3.2 V6	10.03 -	155	3175	6	Z 32 SE	**CL229**	1	CP059	3	rail coil for cyl 1-3-5
						CL232	1	CP059	3	rail coil for cyl 2-4-6
Vectra C GTS										
1.6	08.05 -	74	1598	4	Z 16 XE	**CL202**	1			rail coil
1.6	01.06 -	77	1598	4	Z 16 XEP	**CL221**	1	CP062	4	rail coil
1.8	01.06 -	103	1796	4	Z 18 XER	**CL221**	1	CP062	4	rail coil
1.8 16V	08.02 -	90	1796	4	Z 18 XE	**CL203**	1	CP060	4	rail coil
2.0 16V Turbo	03.03 -	129	1998	4	Z 20 NET	**CL235**	4			pencil
2.2 16V	08.02 -	108	2198	4	Z 22 SE	**CL224**	1	CP058	4	rail coil
2.2 Direct	10.03 -	114	2198	4	Z 22 YH	**CL226**	1			rail coil
2.8 V6 Turbo	08.05 -	169	2792	6	Z 28 NEL	**CL239**	6	CP061	6	pencil
2.8 V6 Turbo	08.06 -	184	2792	6	Z 28 NET	**CL239**	6	CP061	6	pencil
2.8 V6 Turbo	08.05 -	188	2792	6	Z 28 NET	**CL239**	6	CP061	6	pencil
2.8 V6 Turbo	08.06 -	206	2792	6	Z 28 NET	**CL239**	6	CP061	6	pencil
3.2 V6	08.02 -	155	3175	6	Z 32 SE	**CL229**	1	CP059	3	rail coil for cyl 1-3-5
						CL232	1	CP059	3	rail coil for cyl 2-4-6
Vivaro Combi (J7)										
2.0 16V	08.01 -	88	1998	4	F4R 720	**CL100**	4			pencil
2.0 Ecotec	08.06 -	86	1998	4	F4R 820	**CL100**	4			pencil
Vivaro Flatbed (E7)										
2.0 16V	08.06 -	88	1998	4	F4R 720	**CL100**	4			pencil
2.0 Ecotec	08.06 -	86	1998	4	F4R 820	**CL100**	4			pencil

model	year	kW	cm³	cyl	engine	coil	pcs	boot	pcs	info
OPEL (VAUXHALL)										
Vivaro Van (F7)										
2.0 16V	08.01 -	88	1998	4	F4R 720	**CL100**	4			pencil
2.0 Ecotec	08.06 -	86	1998	4	F4R 820	**CL100**	4			pencil
Zafira A (F75_)										
1.6 16V	04.99 - 06.05	74	1598	4	X 16 XEL	**CL200**	1			coil 4xPIN / engine code
				4	Z 16 XE	**CL202**	1			rail coil / engine code
1.6 CNG	09.01 - 06.05	71	1598	4	Z 16 YNG	**CL202**	1			rail coil
1.8 16V	04.99 - 09.00	85	1796	4	X 18 XE1	**CL203**	1	CP060	4	rail coil
						CL207	1			coil 4xPIN
1.8 16V	09.00 - 06.05	92	1796	4	Z 18 XE	**CL203**	1	CP060	4	rail coil
2.0 OPC	09.01 - 06.05	141	1998	4	Z 20 LET	**CL218**	1	CP071	4	rail coil
2.0 OPC	11.02 - 06.05	147	1998	4	Z 20 LET/Z 20 LER	**CL218**	1	CP071	4	rail coil
2.2 16V	09.00 - 06.05	108	2198	4	Z 22 SE	**CL224**	1	CP058	4	rail coil
Zafira B (A05)										
1.6	07.05 -	77	1598	4	Z 16 XE1/Z 16 XEP	**CL221**	1	CP062	4	rail coil
1.6	01.08 -	85	1598	4	A 16 XER/Z 16 XER	**CL221**	1	CP062	4	rail coil
1.6 CNG	01.06 -	69	1598	4	Z 16 YNG	**CL202**	1			rail coil
1.6 CNG Turbo	02.09 -	110	1598	4	A 16 XNT/Z 16 XNT	**CL221**	1	CP062	4	rail coil
1.8	06.13 -	88	1796	4	A 18 XEL	**CL233**	1			rail coil
1.8	07.05 -	103	1796	4	Z 18 XER/A 18 XER	**CL221**	1	CP062	4	rail coil
2.0	07.05 -	147	1998	4	Z 20 LER	**CL218**	1	CP071	4	rail coil
2.0	01.06 -	177	1998	4	Z 20 LEH	**CL218**	1	CP071	4	rail coil
2.2	07.05 -	110	2198	4	Z 22 YH	**CL226**	1			rail coil
Zafira B Van										
1.8	07.05 -	103	1796	4	Z 18 XER/A 18 XER	**CL221**	1	CP062	4	rail coil
Zafira C Tourer (P12)										
1.4	10.11 -	88	1364	4	B 14 NEL/A 14 NEL	**CL238**	1			rail coil
1.4	10.11 -	103	1364	4	A 14 NET/B 14 NET	**CL238**	1			rail coil
1.4 LPG	10.11 -	103	1364	4	A 14 NET/B 14 NET	**CL238**	1			rail coil
1.6 CNG	10.11 -	110	1598	4	A 16 XNT/B 16 XNT	**CL221**	1	CP062	4	rail coil
1.6 SIDI	12.12 -	125	1598	4	A 16 XHT	**CL240**	4			pencil
1.8	10.11 -	103	1796	4	A 18 XER	**CL233**	1			rail coil
1.8	10.11 -	85	1796	4	A 18 XEL	**CL233**	1			rail coil
1.8	10.11 -	88	1796	4	A 18 XEL	**CL233**	1			rail coil
PEUGEOT										
106 I (1A, 1C)										
1.0	09.91 - 04.96	33	954	4	TU9/CDY (TU9M)	**CL106**	1			PIN
						CL109	1			SAE
1.0	09.91 - 04.96	37	954	4	CDZ (TU9M)	**CL106**	1			
1.1	09.91 - 04.96	44	1124	4	HDZ (TU1M)	**CL106**	1			PIN
						CL109	1			SAE
1.3	10.93 - 04.96	72	1294	4	TU2J2	**CL106**	1			
1.4	08.91 - 03.96	51	1360	4	K5A (TU3)	**CL109**	1			
1.4	03.94 - 04.96	55	1361	4	KDX (TU3MC)	**CL106**	1			PIN / engine code
				4	KDY (TU3M)	**CL109**	1			SAE / engine code
1.4	09.91 - 04.96	69	1361	4	KFZ (TU3J2/Z)	**CL106**	1			
1.6	06.93 - 04.96	65	1587	4	NFZ (TU5JP)	**CL106**	1			
1.6	01.94 - 04.96	76	1587	4	NFY (TU5J2)	**CL106**	1			
106 II (1)										
1.0 i	05.96 -	33	954	4	CDY (TU9M)	**CL107**	1			
1.0 i	01.97 -	37	954	4	CDZ (TU9M)	**CL107**	1			
1.1 i	01.97 - 06.00	40	1124	4	HDY (TU1M)	**CL107**	1			coil 4xPIN / year
	06.00 -	40	1124	4	HDY (TU1M)	**CL111**	1	CP069	4	rail coil / year
1.1 i	05.96 -	44	1124	4	HDZ (TU1M)	**CL107**	1			coil 4xPIN / engine code
				4	HFX (TU1JP)	**CL111**	1	CP069	4	rail coil / engine code
1.4 i	05.96 - 06.97	55	1360	4	KFX (TU3JP)/KFW (TU3JP)	**CL107**	1			coil 4xPIN / year
	06.97 - 06.00	55	1360	4	KFX (TU3JP)/KFW (TU3JP)	**CL110**	1			1st rail coil / year
	06.00 -	55	1360	4	KFX (TU3JP)/KFW (TU3JP)	**CL111**	1	CP069	4	2nd rail coil / year
1.6 i	05.96 -	65	1587	4	NFZ (TU5JP)	**CL106**	1			
1.6 i	05.96 -	74	1587	4	NFW (TU5J2)/NFY (TU5J2)	**CL106**	1			
1.6 S16	05.96 -	87	1587	4	NFX (TU5J4)	**CL127**	1	CP073	4	1st rail coil OEM No. 5970.56
						CL141	1	CP073	4	2nd rail coil OEM No. 5970.81
107										
1.0	06.05 -	50	998	3	1KR (384 F)	**CL555**	3	CP042	3	pencil
1007 (KM_)										
1.4	04.05 -	54	1360	4	KFV (TU3JP)	**CL111**	1	CP069	4	1st rail coil OEM No. 5970.78
						CL120	1	CP069	4	2nd rail coil OEM No. 5970.90
1.4 16V	10.05 -	65	1360	4	KFU (ET3J4)	**CL151**	1			rail coil
1.6 16V	04.05 -	80	1587	4	NFU (TU5JP4)	**CL104**	1	CP068	4	rail coil
108										
1.2	05.14 -	60	1199	3	HMT (EB2D)	**CL157**	3			pencil

PEUGEOT ▶

model	year	kW	cm³	cyl	engine	coil	pcs	boot	pcs	info
PEUGEOT										
205 I Cabriolet (741B, 20D)										
1.1 CJ	10.89 - 12.94	44	1124	4	HDZ (TU1M)	**CL108**	1			
1.4	08.87 - 06.94	62	1360	4	K2B (TU3S)	**CL108**	1			
1.4 CJ	03.89 - 12.94	49	1360	4	K1D (TU3A)	**CL108**	1			
1.4 CJ	05.91 - 12.94	55	1361	4	KDZ (TU3M)/KDY (TU3M)	**CL108**	1			
1.4 CJ cat	01.89 - 09.93	44	1361	4	KAY (TU3CP)	**CL108**	1			
1.6 CJ	08.92 - 12.94	65	1580	4	BDY (XU5M3Z)	**CL107**	1			
1.9 CTI	01.91 - 10.94	75	1905	4	DFZ (XU9J1)	**CL108**	1			
205 II (20A/C)										
1.0	10.87 - 09.98	33	954	4	TU9	**CL108**	1			
1.1	10.87 - 10.90	40	1124	4	H1B (TU1)	**CL108**	1			
1.1	07.89 - 09.98	44	1124	4	HDZ (TU1M)	**CL108**	1			
1.4	10.87 - 10.90	49	1360	4	K1D (TU3A)	**CL108**	1			
1.4	07.88 - 09.98	55	1361	4	KFX/KDZ/KDY (TU3M)	**CL108**	1			
1.4	06.87 - 12.89	62	1360	4	K2B (TU3S)	**CL108**	1			
1.4 cat	08.87 - 09.93	44	1360	4	KAY (TU3CP)	**CL108**	1			
1.6	10.87 - 09.98	53	1580	4	B1E (XU51C)	**CL114**	1			
1.6	01.90 - 09.98	55	1580	4	B1A (XU51C)	**CL114**	1			
1.6 Aut.	05.90 - 09.98	65	1580	4	BDY (XU5M2Z)/BDY (XU5M3Z)	**CL107**	1			
1.9 GTI	01.91 - 10.94	88	1905	4	DKZ (XU9JAZ)	**CL108**	1			
1.9 GTI	01.91 - 09.98	94	1905	4	D6B (XU9JA)	**CL108**	1			
206 CC (2A/C)										
1.1	08.98 - 07.00	40	1124	4		**CL110**	1			rail coil
1.1 i	09.98 -	44	1124	4	HFZ (TU1JP)/HFX (TU1JP)	**CL107**	1			coil 4xPIN
						CL111	1	CP069	4	rail coil
1.4 16V	10.03 -	65	1360	4	KFU (ET3J4)	**CL151**	1			rail coil
1.4 i	09.98 - 02.00	55	1360	4	KFX (TU3JP)/KFW (TU3JP)	**CL110**	1	CP069	4	1st rail coil / year
	03.00 - 02.09	55	1360	4	KFX (TU3JP)/KFW (TU3JP)	**CL111**	1	CP069	4	2nd rail coil / year
	09.98 -	55	1360	4	KFX (TU3JP)/KFW (TU3JP)	**CL120**	1	CP069	4	3rd rail coil OEM No. 5970.90
1.6 16V	12.00 -	80	1587	4	NFU (TU5JP4)	**CL104**	1	CP068	4	rail coil
1.6 i	09.98 - 12.00	65	1587	4	NFZ (TU5JP)	**CL110**	1	CP069	4	rail coil
2.0 RC	07.03 -	130	1997	4	RFK (EW10J4S)	**CL112**	1	CP073	4	rail coil
2.0 S16	04.99 - 10.00	99	1997	4	RFR (DEW10J4)	**CL112**	1	CP073	4	rail coil
2.0 S16	06.99 -	100	1997	4	RFN (EW10J4)	**CL112**	1	CP073	4	rail coil
206 CC (2D)										
1.6 16V	09.00 -	80	1587	4	NFU (TU5JP4)	**CL104**	1	CP068	4	rail coil
2.0 S16	09.00 -	100	1997	4	RFN (EW10J4)	**CL112**	1	CP073	4	rail coil
206 Sedan										
1.4	03.07 -	55	1360	4	KFV (TU3A)/KFW (TU3JP)	**CL120**	1	CP069	4	rail coil
1.6 16V	03.07 -	80	1587	4	NFU (TU5JP4)	**CL104**	1	CP068	4	rail coil
206 SW (2E/K)										
1.1	07.02 -	44	1124	4	HFX (TU1JP)	**CL111**	1	CP069	4	rail coil
1.4	07.02 -	55	1360	4	KFV (TU3A)/KFW (TU3JP)	**CL111**	1	CP069	4	rail coil
1.4 16V	10.03 -	65	1360	4	KFU (ET3J4)	**CL111**	1	CP069	4	1st rail coil OEM No. 5970.78
						CL151	1			2nd rail coil OEM No. 5970.85
1.6 16V	07.02 -	80	1587	4	NFU (TU5JP4)	**CL104**	1	CP068	4	rail coil
2.0 16V	07.02 -	100	1997	4	RFN (EW10J4)	**CL112**	1	CP073	4	rail coil
206+ (T3E)										
1.1	01.09 -	44	1124	4	HFX (TU1JP)/TU1AE5	**CL120**	1	CP069	4	rail coil
1.4 i	01.09 -	55	1360	4	KFV (TU3A)/KFW (TU3A)	**CL120**	1	CP069	4	rail coil
1.6 16V	07.10 -	80	1587	4	NFU (TU5JP4)	**CL104**	1	CP068	4	rail coil
207 (WA_, WC_)										
1.4	02.06 -	53	1360	4	KFV (TU3A)	**CL120**	1	CP069	4	rail coil
1.4 16V	02.06 -	65	1360	4	KFU (ET3J4)	**CL151**	1			rail coil
1.4 16V	06.07 -	70	1397	4	EP3C/8FS (EP3)/EP3	**CL603**	4			pencil
1.6 16V	02.06 -	80	1587	4	NFU (TU5JP4)	**CL104**	1	CP068	4	rail coil
1.6 16V Turbo	10.09 -	115	1598	4	5FR (EP6DT)	**CL603**	4			pencil
1.6 16V VTi	02.07 -	88	1598	4	5FS (EP6C)/EP6	**CL603**	4			pencil
207 CC (WD_)										
1.6 16V	02.07 -	88	1598	4	5FS (EP6C)/EP6	**CL603**	4			pencil
1.6 16V Turbo	10.09 -	115	1598	4	5FR (EP6DT)	**CL603**	4			pencil
207 SW (WK_)										
1.4	06.07 -	54	1360	4	KFV (TU3A)	**CL120**	1	CP069	4	rail coil
1.4 16V	06.07 -	70	1397	4	EP3C/8FS (EP3)/EP3	**CL603**	4			pencil
1.6 16V	06.07 -	88	1598	4	5FS (EP6C)/EP6	**CL603**	4			pencil
208										
1.0	03.12 -	50	999	3	ZMZ (EB0)	**CL157**	3			pencil
1.2	03.12 -	60	1199	3	HMZ (EB2F)	**CL157**	3			pencil
1.2 THP	01.13 -	81	1199	3	HNZ (EB2DT)	**CL158**	3			pencil
1.4	03.12 -	70	1397	4	EP3C/8FS (EP3)	**CL603**	4			pencil
1.6	03.12 -	88	1598	4	5FS (EP6C)	**CL603**	4			pencil
1.6	03.12 -	115	1598	4	EP6CDT/5FV (EP6DT)	**CL603**	4			pencil

PEUGEOT 208 ▶

model	year	kW	cm³	cyl	engine	coil	pcs	boot	pcs	info
PEUGEOT										
208										
1.6 THP 165	03.15 -	121	1598	4		**CL603**	4			pencil
2008										
1.2 THP 110	01.15 -	81	1199	3	HNZ (EB2DT)	**CL158**	3			pencil
1.2 THP 130	01.15 -	96	1199	3	HNY (EB2DTS)	**CL158**	3			pencil
1.2 VTi	03.13 -	60	1199	3	HMZ (EB2F)	**CL157**	3			pencil
1.6 VTi	03.13 -	88	1598	4	5FS (EP6C)	**CL603**	4			pencil
301										
1.2 VTi 72	11.12 -	53	1199	3	HMY (EB2M)	**CL157**	3			pencil
1.6 VTi 115	11.12 -	85	1587	4	NFP (EC5)	**CL156**	1			rail coil
306 (7B, N3, N5)										
1.1	06.94 - 05.01	44	1124	4	HDZ (TU1M)	**CL106**	1			
1.4 SL	06.94 - 06.97	55	1360	4	KDX/KFX/KFW	**CL106**	1			coil 4x PIN / year
	06.97 - 05.00	55	1360	4	KDX/KFX/KFW	**CL110**	1			1st rail coil / year
	06.00 - 05.01	55	1360	4	KDX/KFX/KFW	**CL111**	1	CP069	4	2nd rail coil / year
1.6	10.00 - 05.01	72	1587	4	NFT	**CL111**	1	CP069	4	rail coil
1.6 SR	06.94 - 06.98	65	1587	4	NFZ (TU5JP)	**CL106**	1			coil 4x PIN / year
	07.98 - 10.00	65	1587	4	NFZ (TU5JP)	**CL110**	1	CP069	4	rail coil / year
1.8 16V	03.97 - 05.01	81	1761	4	LFY (XU7JP4)	**CL107**	1			coil 4x PIN
	09.97 - 05.01	81	1761	4	LFY (XU7JP4)	**CL115**	1			rail coil / year
1.8 ST	06.94 - 05.01	74	1762	4	LFZ (XU7JP)	**CL107**	1			
2.0	03.97 - 05.01	97	1998	4	RFV (XU10J4R)	**CL107**	1			coil 4x PIN
	03.97 - 09.97	97	1998	4	RFV (XU10J4R)	**CL113**	1			1st rail coil / year
	09.97 - 05.01	97	1998	4	RFV (XU10J4R)	**CL115**	1			2nd rail coil / year
2.0 S16	06.94 - 05.01	110	1998	4	RFT (XU10J4)	**CL105**	4			pencil
2.0 S16	06.94 - 05.01	112	1998	4	RFY (XU10J4Z)	**CL105**	4			pencil
2.0 ST	07.94 - 05.01	89	1998	4	RFX (XU10J2)	**CL107**	1			
306 Break (7E, N3, N5)										
1.4	03.97 - 05.98	55	1360	4	KFX (TU3JP)/KFW (TU3JP)	**CL107**	1			coil 4xPIN / year
	06.98 - 06.00	55	1360	4	KFX (TU3JP)/KFW (TU3JP)	**CL110**	1	CP069	4	1st rail coil / year
	03.97 - 04.02	55	1360	4	KFX (TU3JP)/KFW (TU3JP)	**CL111**	1	CP069	4	2nd rail coil / year
1.6	03.97 - 07.98	65	1587	4	NFZ (TU5JP)	**CL106**	1			coil 4xPIN / year
	07.98 - 10.00	65	1587	4	NFZ (TU5JP)	**CL110**	1	CP069	4	rail coil / year
1.6	10.00 - 04.02	72	1587	4	NFT	**CL111**	1	CP069	4	rail coil
1.8	03.97 - 04.02	74	1762	4	LFZ (XU7JP)	**CL107**	1			
1.8 16V	03.97 - 04.02	81	1761	4	LFY (XU7JP4)	**CL107**	1			coil 4xPIN
						CL115	1			rail coil
2.0	03.97 - 04.02	97	1998	4	RFV (XU10J4R)	**CL107**	1			coil 4xPIN
						CL115	1			rail coil
306 Cabriolet (7D, N3, N5)										
1.6	04.96 - 10.00	65	1587	4	NFZ (TU5JP)	**CL106**	1			
1.6	10.00 - 04.02	72	1587	4	NFT	**CL111**	1	CP069	4	rail coil
1.8	03.94 - 04.02	74	1762	4	LFZ (XU7JP)	**CL107**	1			
1.8 16V	07.00 - 04.02	81	1761	4	LFY (XU7JP4)	**CL107**	1			coil 4x PIN
						CL115	1			rail coil
2.0	03.94 - 04.02	89	1998	4	RFX (XU10J2)	**CL107**	1			
2.0 16V	03.97 - 04.02	97	1998	4	RFV (XU10J4R)	**CL107**	1			coil 4x PIN
	03.97 - 09.97	97	1998	4	RFV (XU10J4R)	**CL113**	1			1st rail coil / year
	09.97 - 04.02	97	1998	4	RFV (XU10J4R)	**CL115**	1			2nd rail coil / year
306 CC (7A, 7C, N3, N5)										
1.1	05.93 - 05.01	44	1124	4	HDZ (TU1M)	**CL106**	1			
1.4	05.93 - 05.97	55	1360	4	KDX/KFX/KFW	**CL106**	1			coil 4x PIN / year
	06.97 - 05.01	55	1360	4	KDX/KFX/KFW	**CL111**	1	CP069	4	rail coil / year
1.6	05.93 - 10.00	65	1587	4	NFZ (TU5JP)	**CL106**	1			
1.6	10.00 - 05.01	72	1587	4	NFT	**CL111**	1	CP069	4	rail coil
1.8	05.93 - 05.01	74	1762	4	LFZ (XU7JP)	**CL107**	1			
1.8 16V	03.97 - 05.01	81	1761	4	LFY (XU7JP4)	**CL107**	1			coil 4x PIN
						CL115	1			rail coil
2.0 16V	03.97 - 05.01	97	1998	4	RFV (XU10J4R)	**CL107**	1			coil 4x PIN
	03.97 - 09.97	97	1998	4	RFV (XU10J4R)	**CL113**	1			1st rail coil / year
	09.97 - 05.01	97	1998	4	RFV (XU10J4R)	**CL115**	1			2nd rail coil / year
2.0 S16	06.94 - 05.01	110	1998	4	RFT (XU10J4)	**CL105**	4			pencil
2.0 S16	05.93 - 05.01	112	1998	4	RFY (XU10J4Z)	**CL105**	4			pencil
2.0 S16	03.96 - 05.01	120	1998	4	RFS (XU10J4RS)	**CL132**	4			pencil
2.0 XSi	05.93 - 05.01	89	1998	4	RFX (XU10J2)	**CL107**	1			
307 (3A/C)										
1.4	08.00 -	55	1360	4	KFW (TU3JP)	**CL111**	1	CP069	4	rail coil
1.4 16V	11.03 -	65	1360	4	KFU (ET3J4)	**CL151**	1			rail coil
1.6 16V	08.00 -	80	1587	4	NFU (TU5JP4)	**CL104**	1	CP068	4	rail coil
2.0 16V	08.00 -	100	1997	4	RFN (EW10J4)	**CL112**	1	CP073	4	rail coil
2.0 16V	03.05 -	103	1997	4	RFJ (EW10A)	**CL138**	1			rail coil
2.0 16V	06.05 -	130	1997	4	RFK (EW10J4S)	**CL133**	1	CP073	4	rail coil

model	year	kW	cm³	cyl	engine	coil	pcs	boot	pcs	info
PEUGEOT										
307 Break (3E)										
1.4 16V	11.03 -	65	1360	4	KFU (ET3J4)	**CL111**	1	CP069	4	1st rail coil OEM No. 5970.78
						CL151	1			2nd rail coil OEM No. 5970.85
1.6 16V	03.02 -	80	1587	4	NFU (TU5JP4)	**CL104**	1	CP068	4	rail coil
2.0	03.02 -	100	1997	4	RFN (EW10J4)	**CL112**	1	CP073	4	rail coil
2.0 16V	03.05 -	103	1997	4	RFJ (EW10A)	**CL138**	1			rail coil
2.0 16V	06.05 -	130	1997	4	RFK (EW10J4S)	**CL133**	1	CP073	4	rail coil
307 CC (3B)										
1.6 16V	02.05 -	80	1587	4	NFU (TU5JP4)	**CL104**	1	CP068	4	rail coil
2.0 16V	10.03 -	100	1997	4	RFN (EW10J4)	**CL112**	1	CP073	4	rail coil
2.0 16V	10.03 -	130	1997	4	RFK (EW10J4S)	**CL133**	1	CP073	4	rail coil
2.0 16V	03.05 -	103	1997	4	RFJ (EW10A)	**CL138**	1			rail coil
307 SW (3H)										
1.4 16V	11.03 -	65	1360	4	KFU (ET3J4)	**CL111**	1	CP069	4	1st rail coil OEM No. 5970.78
						CL151	1			2nd rail coil OEM No. 5970.85
1.6 16V	03.02 -	80	1587	4	NFU (TU5JP4)	**CL104**	1	CP068	4	rail coil
2.0 16V	03.02 -	100	1997	4	RFN (EW10J4)	**CL112**	1	CP073	4	rail coil
2.0 16V	03.05 -	103	1997	4	RFJ (EW10A)	**CL138**	1			rail coil
308 (4A_, 4C_)										
1.4 16V	09.07 -	70	1397	4	8FS (EP3)/EP3	**CL603**	4			pencil
1.4 16V	12.09 -	72	1397	4		**CL603**	4			pencil
1.6 16V	09.07 -	88	1598	4	EP6	**CL603**	4			pencil
1.6 16V	09.07 -	103	1598	4	5FT (EP6DT)	**CL603**	4			pencil
1.6 16V	10.09 -	115	1598	4	EP6CDT	**CL603**	4			pencil
1.6 Bioflex	04.08 -	80	1587	4	NFU (TU5JP4)	**CL104**	1	CP068	4	rail coil
308 CC										
1.6 16V	06.09 -	88	1598	4	EP6	**CL603**	4			pencil
1.6 16V	06.09 -	103	1598	4	5FT (EP6DT)	**CL603**	4			pencil
1.6 16V	06.09 -	115	1598	4	EP6CDT	**CL603**	4			pencil
308 II										
1.2 THP 130	11.13 -	96	1199	3	HNY (EB2DTS)	**CL158**	3			pencil
1.2 VTi 72	09.13 -	60	1199	3	HMZ (EB2F)	**CL157**	3			pencil
1.6	09.13 -	115	1598	4		**CL603**	4			pencil
1.6 VTi	03.14 -	85	1598	4		**CL156**	1			rail coil
308 SW										
1.4 16V	09.07 -	70	1397	4	8FS (EP3)	**CL603**	4			pencil
1.4 16V	12.09 -	72	1397	4		**CL603**	4			pencil
1.6 16V	09.07 -	88	1598	4	EP6	**CL603**	4			pencil
1.6 Bioflex	03.09 -	82	1587	4	NFU (TU5JP4)	**CL104**	1	CP068	4	rail coil
308 SW II										
1.2 THP 110	03.14 -	81	1199	3	HNZ (EB2DT)	**CL158**	3			pencil
1.2 THP 130	03.14 -	96	1199	3	HNY (EB2DTS)	**CL158**	3			pencil
1.6 VTi	03.14 -	85	1598	4		**CL156**	1			rail coil
3008										
1.6 THP	06.09 -	115	1598	4	5FV (EP6DT)	**CL603**	4			pencil
1.6 VTi	06.09 -	88	1598	4	5FS (EP6C)/EP6	**CL603**	4			pencil
309 I (10C, 10A)										
1.4	03.89 - 07.89	49	1360	4	K1D (TU3A)	**CL108**	1			
1.4	03.89 - 07.89	55	1360	4	KDZ (TU3M)/KDY (TU3M)	**CL108**	1			
1.4	03.89 - 07.89	62	1360	4	K2B (TU3S)	**CL108**	1			
1.6	01.86 - 07.89	69	1592	4		**CL114**	1			
1.6	11.85 - 09.88	76	1580	4	180Z (XU5J)/B6B (XU5J)	**CL108**	1			
309 II (3C, 3A)										
1.1	08.90 - 12.93	44	1124	4	HDZ (TU1M)	**CL108**	1			ignition system Bosch
						CL114	1			ignition system Marelli
1.4	07.90 - 12.93	49	1361	4	K1D (TU3A)	**CL108**	1			
1.4	07.89 - 12.93	55	1361	4	KDZ (TU3M)/KDY (TU3M)	**CL108**	1			
1.6	07.89 - 12.93	65	1580	4	BDZ (XU5M)/BDY (XU5M3Z)	**CL107**	1			PIN
						CL114	1			SAE
1.6	07.89 - 12.93	68	1580	4	B2A (XU52C/K)	**CL114**	1			
1.6	07.89 - 12.93	69	1580	4	B2A (XU52C/K)	**CL114**	1			
1.9	01.91 - 12.93	72	1905	4	DFZ (XU9J1)	**CL108**	1			
1.9 GTI	12.89 - 12.93	88	1905	4	DKZ (XU9JAZ)	**CL108**	1			
1.9 GTI 16V	10.90 - 12.93	108	1905	4	DFW (XU9J4Z)	**CL114**	1			
1.9 GTI 16V	08.89 - 07.90	116	1905	4	D6C (XU9J4)	**CL114**	1			
405 I (15B)										
1.4	01.87 - 07.92	47	1360	4	K5A (TU3)	**CL108**	1			
1.6	07.87 - 12.92	53	1580	4	B1E (XU51C)	**CL114**	1			
1.6	07.87 - 06.88	55	1580	4	B1E (XU51C)/BAZ (XU5CP)	**CL114**	1			
1.6	07.87 - 09.90	65	1580	4	BDY (XU5M2Z)/BDZ (XU5M)	**CL114**	1			SAE / year
	09.90 - 12.92	65	1580	4	BDY (XU5M2Z)/BDZ (XU5M)	**CL107**	1			PIN / year
1.6	10.89 - 12.92	66	1580	4	BDZ (XU5M)	**CL114**	1			

PEUGEOT 405 I (15B) ▶

model	year	kW	cm³	cyl	engine	coil	pcs	boot	pcs	info
PEUGEOT										
405 I (15B)										
1.6	01.87 - 12.92	69	1580	4	B2A (XU52C/K)	**CL114**	1			
1.6 4x4	04.88 - 07.92	65	1580	4	BDZ (XU5M)	**CL114**	1			
1.9	07.87 - 12.92	70	1905	4	D2C (XU92C)	**CL114**	1			
1.9	07.88 - 12.92	88	1905	4	DKZ (XU9JAZ)	**CL114**	1			
1.9 Sport MI-16	04.88 - 12.92	108	1905	4	DFW (XU9J4Z)	**CL114**	1			
1.9 Sport MI-16	07.87 - 11.91	116	1905	4	D6C (XU9J4)	**CL114**	1			
1.9 Sport MI-16 4x4	04.88 - 12.92	108	1905	4	DFW (XU9J4Z)	**CL114**	1			
405 I Break (15E)										
1.6	10.88 - 08.92	55	1580	4	BAZ (XU5CP)	**CL114**	1			
1.6	10.88 - 09.90	65	1580	4	BDZ (XU5M)/BDY (XU5M3Z)	**CL114**	1			SAE / year
	10.90 - 08.92	65	1580	4	BDZ (XU5M)/BDY (XU5M3Z)	**CL107**	1			PIN / year
1.6	10.88 - 08.92	66	1580	4	BDZ (XU5M)	**CL114**	1			
1.6 SRi 4x4	04.88 - 07.92	65	1580	4	BDZ (XU5M)	**CL114**	1			
1.9	10.88 - 08.92	70	1905	4	D2C (XU92C)	**CL114**	1			
1.9	10.88 - 08.92	88	1905	4	DKZ (XU9JAZ)	**CL114**	1			
405 II (4B)										
1.4	08.92 - 10.95	55	1361	4	KDX (TU3MC)	**CL106**	1			
1.6	08.92 - 10.95	65	1580	4	BFZ/BDY	**CL107**	1			
1.8	08.92 - 10.95	74	1762	4	LFZ (XU7JP)	**CL107**	1			
2.0	08.92 - 10.95	89	1998	4	RFX (XU10J2)	**CL107**	1			
2.0 T 16 X4	08.92 - 10.95	144	1998	4	RGZ (XU10J4TE/Z)	**CL105**	4			pencil
2.0 X4	08.92 - 10.95	89	1998	4	RFX (XU10J2)	**CL107**	1			
405 II Break (4E)										
1.4	08.92 - 10.96	55	1361	4	KDX (TU3MC)	**CL106**	1			
1.6	08.92 - 10.96	65	1580	4	BFZ/BDY	**CL107**	1			
1.8	08.92 - 10.96	74	1762	4	LFZ (XU7JP)	**CL107**	1			
2.0	08.92 - 10.96	89	1998	4	RFX (XU10J2)	**CL107**	1			
2.0 4x4	08.92 - 10.96	89	1998	4	RFX (XU10J2)	**CL107**	1			
2.0 4x4	08.92 - 12.95	144	1998	4	RGZ (XU10J4TE/Z)	**CL105**	4			pencil
406 (8B)										
1.6	11.95 - 05.04	65	1580	4	BFZ (XU5JP)	**CL107**	1			
1.8	05.97 - 05.04	66	1761	4	LFX (XU7JB)	**CL107**	1			
1.8 16V	11.95 - 03.99	81	1761	4	LFY (XU7JP4)	**CL107**	1			coil 4xPIN / year
	09.97 - 10.00	81	1761	4	LFY (XU7JP4)	**CL115**	1			rail coil / year
1.8 16V	10.00 - 05.04	85	1749	4	6FZ (EW7J4)	**CL112**	1	CP073	4	rail coil
2.0 16V	11.95 - 05.04	97	1998	4	RFV (XU10J4R)	**CL107**	1			coil 4xPIN
	11.95 - 09.97	97	1998	4	RFV (XU10J4R)	**CL113**	1			1st rail coil / year
	09.97 - 05.04	97	1998	4	RFV (XU10J4R)	**CL115**	1			2nd rail coil / year
2.0 16V	01.99 - 08.00	99	1997	4	RFR (DEW10J4)	**CL112**	1	CP073	4	rail coil
2.0 16V	08.00 - 06.04	100	1997	4	RFN (EW10J4)	**CL112**	1	CP073	4	rail coil
2.0 16V HPi	05.01 - 05.04	103	1997	4	RLZ (EW10D)	**CL154**	1			rail coil
2.0 Turbo	04.96 - 05.04	108	1998	4	RGX (XU10J2TE)	**CL107**	1			
2.2	07.00 - 05.04	116	2230	4	3FZ (EW12J4)	**CL133**	1	CP073	4	rail coil
3.0 24V	10.96 - 05.04	140	2946	6	XFZ (ES9J4)	**CL140**	1			rail coil for 3 cylinders
3.0 V6	03.00 - 05.04	152	2946	6	XFX (ES9J4S)	**CL135**	6			pencil
406 Break (8E/F)										
1.8	05.97 - 10.04	66	1761	4	LFX (XU7JB)	**CL107**	1			
1.8 16V	10.96 - 03.99	81	1761	4	LFY (XU7JP4)	**CL107**	1			coil 4xPIN / year
	09.97 - 10.00	81	1761	4	LFY (XU7JP4)	**CL115**	1			rail coil / year
1.8 16V	10.00 - 10.04	85	1749	4	6FZ (EW7J4)	**CL112**	1	CP073	4	rail coil
2.0 16V	10.96 - 03.97	97	1998	4	RFV (XU10J4R)	**CL107**	1			coil 4xPIN / year
	11.96 - 11.97	97	1998	4	RFV (XU10J4R)	**CL113**	1			1st rail coil / year
	09.97 - 04.04	97	1998	4	RFV (XU10J4R)	**CL115**	1			2nd rail coil / year
2.0 16V	01.99 - 10.00	99	1997	4	RFR (DEW10J4)	**CL112**	1	CP073	4	rail coil
2.0 16V	10.00 - 10.04	100	1997	4	RFN (EW10J4)	**CL112**	1	CP073	4	rail coil
2.0 16V HPi	05.01 - 10.04	103	1997	4	RLZ (EW10D)	**CL154**	1			rail coil
2.0 Turbo	10.96 - 10.04	108	1998	4	RGX (XU10J2TE)	**CL107**	1			
2.2	07.00 - 10.04	116	2230	4	3FZ (EW12J4)	**CL133**	1	CP073	4	rail coil
3.0 24V	10.96 - 10.04	140	2946	6	XFZ (ES9J4)	**CL140**	1			rail coil for 3 cylinders
3.0 V6	03.00 - 10.04	152	2946	6	XFX (ES9J4S)	**CL135**	6			pencil
406 Coupe (8C)										
2.0 16V	03.97 - 12.04	97	1998	4	RFV (XU10J4R)	**CL107**	1			coil 4xPIN
	05.97 - 09.97	97	1998	4	RFV (XU10J4R)	**CL113**	1			1st rail coil / year
	05.97 - 04.99	97	1998	4	RFV (XU10J4R)	**CL115**	1			2nd rail coil / year
2.0 16V	01.99 - 10.00	99	1997	4	RFR (DEW10J4)	**CL112**	1	CP073	4	rail coil
2.0 16V	10.00 - 12.04	100	1997	4	RFN (EW10J4)	**CL112**	1	CP073	4	rail coil
2.2	03.02 - 12.04	116	2230	4	3FZ (EW12J4)	**CL133**	1	CP073	4	rail coil
3.0 V6	03.00 - 12.04	152	2946	6	XFX (ES9J4S)	**CL135**	6			pencil
3.0 V6 24V	03.97 - 12.04	140	2946	6	XFZ (ES9J4)	**CL140**	1			rail coil for 3 cylinders

model	year	kW	cm³	cyl	engine	coil	pcs	boot	pcs	info
PEUGEOT										
407 (6D_)										
1.8	05.04 -	85	1749	4	6FZ (EW7J4)	**CL112**	1	CP073	4	rail coil
1.8 16V	09.05 -	92	1749	4	6FY (EW7A)	**CL138**	1			rail coil
2.0	05.04 -	100	1997	4	RFN (EW10J4)	**CL112**	1	CP073	4	rail coil
2.0 16V	09.05 -	103	1997	4	RFJ (EW10A)	**CL138**	1			rail coil
2.0 Bioflex	09.07 -	103	1997	4	RFJ (EW10A)	**CL138**	1			rail coil
2.2	05.04 -	116	2230	4	3FZ (EW12J4)	**CL133**	1	CP073	4	1st rail coil OEM No. 5970.84
						CL139	1	CP073	4	2nd rail coil OEM No. 5970.92
3.0	05.04 -	155	2946	6	XFV (ES9A)	**CL135**	6			pencil
407 Coupe (6C_)										
2.2 16V	10.05 -	120	2230	4	3FY (EW12J4)	**CL133**	1	CP073	4	rail coil
3.0 V6	10.05 -	155	2946	6	XFV (ES9A)	**CL135**	6			pencil
407 SW (6E_)										
1.8	05.04 -	85	1749	4	6FZ (EW7J4)	**CL112**	1	CP073	4	rail coil
1.8 16V	09.05 -	92	1749	4	6FY (EW7A)	**CL138**	1			rail coil
2.0	05.04 -	100	1997	4	RFN (EW10J4)	**CL112**	1	CP073	4	rail coil
2.0 16V	09.05 -	103	1997	4	RFJ (EW10A)	**CL138**	1			rail coil
2.2	05.04 -	116	2230	4	3FZ (EW12J4)	**CL133**	1	CP073	4	rail coil
3.0	05.04 -	155	2946	6	XFV (ES9A)	**CL135**	6			pencil
4007										
2.4 16V	01.08 -	125	2360	4		**CL927**	4			pencil
4008										
1.6	05.12 -	86	1590	4	4A92	**CL929**	4			pencil
508										
1.6 THP	11.10 -	115	1598	4	EP6CDT	**CL603**	4			pencil
1.6 VTi	11.10 -	88	1598	4	5FS (EP6C)	**CL603**	4			pencil
508 SW										
1.6 THP	11.10 -	115	1598	4	EP6CDT	**CL603**	4			pencil
1.6 VTi	11.10 -	88	1598	4	5FS (EP6C)	**CL603**	4			pencil
5008										
1.6 16V	09.09 -	88	1598	4	5FS (EP6C)/EP6	**CL603**	4			pencil
1.6 16V	09.09 -	115	1598	4	EP6CDT	**CL603**	4			pencil
605 (6B)										
2.0	02.90 - 09.99	79	1998	4		**CL129**	1			
2.0	06.89 - 09.99	84	1998	4	R5A (XU102C)	**CL129**	1			
2.0	06.89 - 09.90	89	1998	4	RFZ (XU10J2Z)	**CL109**	1			SAE / year
	10.90 - 09.99	89	1998	4	RFZ (XU10J2Z)	**CL107**	1			PIN / year
2.0 16V	07.94 - 05.99	97	1998	4	RFV (XU10J4R)	**CL113**	1			1st rail coil / year
	09.97 - 09.99	97	1998	4	RFV (XU10J4R)	**CL115**	1			2nd rail coil / year
2.0 Turbo	07.92 - 09.99	104	1998	4	RGY (XU10J2TE)	**CL107**	1			
2.0 Turbo	07.91 - 09.99	108	1998	4	RGX (XU10J2TE)	**CL107**	1			
3.0 V6	04.97 - 09.99	140	2946	6	XFZ (ES9J4)	**CL140**	1			rail coil for 3 cylinders
607 (9D, 9U)										
2.0	02.00 -	100	1997	4	RFN (EW10J4)	**CL112**	1	CP073	4	rail coil
2.2 16V	02.00 -	116	2230	4	3FZ (EW12J4)	**CL133**	1	CP073	4	1st rail coil OEM No. 5970.84
						CL139	1	CP073	4	2nd rail coil OEM No. 5970.92
3.0 V6 24V	02.00 -	152	2946	6	XFX (ES9J4S)	**CL135**	6			pencil
3.0 V6 24V	03.04 -	155	2946	6	XFV (ES9A)	**CL135**	6			pencil
806 (221)										
1.8	07.95 - 08.02	73	1761	4	LFW (XU7JP)	**CL107**	1			
2.0	06.94 - 08.02	89	1998	4	RFU (XU10J2)	**CL107**	1			
2.0 16V	05.98 - 09.00	97	1998	4	RFV (XU10J4R)	**CL107**	1			coil 4xPIN
						CL115	1			rail coil
2.0 16V	09.00 - 08.02	100	1997	4	RFN (EW10J4)	**CL112**	1	CP073	4	rail coil
2.0 Turbo	06.94 - 08.02	108	1998	4	RGX (XU10J2TE)	**CL107**	1			
807 (E)										
2.0	06.02 -	100	1997	4	RFN (EW10J4)	**CL112**	1	CP073	4	rail coil
2.0 16V	09.05 -	103	1997	4	RFJ (EW10A)	**CL138**	1			rail coil
2.2	06.02 -	116	2230	4	3FZ (EW12J4)	**CL133**	1	CP073	4	1st rail coil OEM No. 5970.84
						CL139	1	CP073	4	2nd rail coil OEM No. 5970.92
3.0 V6	06.02 -	150	2946	6	XFX (ES9J4S)	**CL135**	6			pencil
Bipper (AA_)										
1.4	02.08 -	54	1360	4	KFV (TU3A)	**CL120**	1	CP069	4	rail coil
Bipper Tepee										
1.4	04.08 -	54	1360	4	KFV (TU3A)	**CL120**	1	CP069	4	rail coil
Boxer Bus (230P)										
2.0 i	03.94 - 04.02	80	1998	4	RFW (XU10J2)	**CL107**	1			
2.0 i 4x4	08.96 - 04.02	80	1998	4	RFW (XU10J2)	**CL107**	1			
Boxer Bus (244, Z_)										
2.0	04.02 -	81	1998	4	RFL (XU10J2U)	**CL107**	1			

model	year	kW	cm³	cyl	engine	coil	pcs	boot	pcs	info
PEUGEOT										
Boxer Flatbed (ZCT_)										
2.0	12.01 - 04.02	81	1998	4	RFL (XU10J2U)	**CL107**	1			
2.0 i	06.94 - 04.02	80	1998	4	RFW (XU10J2)	**CL107**	1			
Boxer Van (230L)										
2.0 4x4	03.96 - 09.98	80	1998	4		**CL107**	1			
2.0 i	06.94 - 04.02	80	1998	4	RFW (XU10J2)	**CL107**	1			
Boxer Van (244)										
2.0	04.02 -	81	1998	4	RFL (XU10J2U)	**CL107**	1			
Expert (224)										
1.6	02.96 -	58	1581	4	222A2 (1580 SPI)	**CL302**	1			
1.8	10.96 - 09.00	74	1761	4	LFZ (XU7JP)	**CL107**	1			
2.0	07.00 -	100	1997	4	RFN (EW10J4)	**CL112**	1	CP073	4	rail coil
Expert Flatbed (223)										
1.6	02.96 -	58	1581	4	222A2 (1580 SPI)	**CL302**	1			
Expert Tepee (VF3V_)										
2.0 16V	01.07 -	103	1997	4	RFJ (EW10A)/RFH (EW10A)	**CL138**	1			rail coil
Expert Van (222)										
1.6	02.96 -	58	1581	4	222A2 (1580 SPI)	**CL302**	1			
1.8	10.96 - 09.00	74	1761	4	LFZ (XU7JP)	**CL107**	1			
2.0	09.02 -	100	1997	4	RFN (EW10J4)	**CL112**	1	CP073	4	rail coil
Expert Van (VF3A_, VF3U_, VF3X_)										
2.0 16V	01.07 -	103	1997	4	RFJ (EW10A)/RFH (EW10A)	**CL138**	1			rail coil
Partner Combispace (5F)										
1.1	06.96 -	44	1124	4	HDZ (TU1M)/HFX (TU1JP)	**CL107**	1			
1.4	06.96 - 11.02	55	1360	4	KFX (TU3JP)	**CL107**	1			coil 4xPIN / year / engine code
	06.96 - 08.02	55	1360	4	KFX (TU3JP)	**CL110**	1	CP069	4	1st rail coil / year / engine code
	09.00 -	55	1360	4	KFX/TU32/KFW (TU3JP)	**CL111**	1	CP069	4	2nd rail coil / year
	09.05 -	55	1360	4	KFX/TU32/KFW (TU3JP)	**CL120**	1	CP069	4	3rd rail coil / year
1.8	05.97 -	66	1761	4	LFX (XU7JB)	**CL107**	1			
1.6 16V	07.01 -	80	1587	4	NFU (TU5JP4)	**CL104**	1	CP068	4	rail coil
Partner Tepee										
1.6	04.08 -	66	1587	4	NFR (TU5JP4B)	**CL104**	1	CP068	4	rail coil
1.6	04.08 -	80	1587	4	NFU (TU5JP4)	**CL104**	1	CP068	4	rail coil
1.6	04.10 -	88	1598	4	5FS (EP6C)	**CL603**	4			pencil
Partner Van (5)										
1.1	06.96 -	44	1124	4	HDZ (TU1M)	**CL107**	1			
1.4	06.96 -	55	1360	4	KFX (TU3JP)/TU32	**CL107**	1			
1.4 BiFuel	04.03 -	55	1360	4	KFW (TU3JP)	**CL111**	1	CP069	4	rail coil
Partner Van										
1.6	04.08 -	66	1587	4	NFR (TU5JP4B)	**CL104**	1	CP068	4	rail coil
1.6	04.08 -	80	1587	4	NFU (TU5JP4)	**CL104**	1	CP068	4	rail coil
1.6	04.10 -	88	1598	4		**CL603**	4			pencil
RCZ										
1.6 16V	03.10 -	115	1598	4	EP6CDT	**CL603**	4			pencil
1.6 16V	06.10 -	147	1598	4	EP6CDTX	**CL603**	4			pencil
PORSCHE										
911 (996)										
3.4 Carrera	09.97 - 09.01	221	3387	6	M 96.01/M 96.04	**CL625**	6	CP027	6	pencil
3.4 Carrera 4	09.97 - 09.01	221	3387	6	M 96.01/M 96.04	**CL625**	6	CP027	6	pencil
3.6 Carrera	10.01 - 08.05	235	3596	6	M 96.03	**CL625**	6	CP028	6	pencil
3.6 Carrera 4	10.01 - 08.05	235	3596	6	M 96.03	**CL625**	6	CP027	6	pencil
3.6 Carrera S	02.03 - 08.05	254	3596	6	M 96.03	**CL625**	6	CP028	6	pencil
3.6 Carrera 4S	02.03 - 08.05	254	3596	6	M 96.03	**CL625**	6	CP028	6	pencil
3.6 GT2	04.01 - 08.05	340	3600	6	M 96.70	**CL625**	6	CP028	6	pencil
3.6 GT2	10.03 - 08.05	355	3600	6	M 96.70	**CL625**	6	CP028	6	pencil
3.6 GT3	03.99 - 08.05	265	3598	6	M 96.76	**CL625**	6	CP028	6	pencil
3.6 GT3	03.03 - 08.05	280	3600	6	M 96.79	**CL625**	6	CP028	6	pencil
3.6 Turbo 4	06.00 - 08.05	309	3600	6	M 96.70	**CL625**	6	CP028	6	pencil
3.6 Turbo 4S	02.03 - 08.05	331	3600	6	M 96.70	**CL625**	6	CP028	6	pencil
911 (997)										
3.6 Carrera	07.04 - 12.08	239	3596	6	M 96.05	**CL625**	6	CP027	6	pencil
3.6 GT 3	03.06 - 12.09	305	3600	6	M 97.76	**CL625**	6	CP027	6	pencil
3.6 Turbo	03.06 - 12.09	353	3600	6	M 97.70	**CL625**	6	CP027	6	pencil
3.8 Carrera 4S	07.04 - 12.08	261	3824	6	M 97.01	**CL625**	6	CP027	6	pencil
3.8 Carrera S	07.04 - 12.08	261	3824	6	M 97.01	**CL625**	6	CP027	6	pencil
911 Cabriolet (996)										
3.4 Carrera	02.98 - 09.01	221	3387	6	M 96.01/M 96.04	**CL625**	6	CP027	6	pencil
3.4 Carrera 4	02.98 - 09.01	221	3387	6	M 96.02/M 96.04	**CL625**	6	CP028	6	pencil
3.6 Carrera	10.01 - 08.05	235	3596	6	M 96.03	**CL625**	6	CP028	6	pencil
3.6 Carrera 4	10.01 - 08.05	235	3596	6	M 96.03	**CL625**	6	CP028	6	pencil
3.6 Carrera S	06.02 - 08.05	254	3596	6	M 96.03	**CL625**	6	CP028	6	pencil
3.6 Carrera 4S	06.02 - 08.05	254	3596	6	M 96.03	**CL625**	6	CP028	6	pencil

PORSCHE 911 Cabriolet (996) ▶

model	year	kW	cm³	cyl	engine	coil	pcs	boot	pcs	info
PORSCHE										
911 Cabriolet (996)										
3.6 Turbo 4	10.03 - 08.05	309	3600	6	M 96.70	**CL625**	6	CP028	6	pencil
3.6 Turbo 4S	10.03 - 08.05	331	3600	6	M 96.70	**CL625**	6	CP028	6	pencil
911 Cabriolet (997)										
3.6 Carrera	04.05 - 12.08	239	3596	6	M 96.05	**CL625**	6	CP027	6	pencil
3.6 Carrera 4	04.05 - 12.08	239	3596	6	M 96.05	**CL625**	6	CP027	6	pencil
3.6 Turbo	09.07 - 12.09	353	3600	6	M 97.70	**CL625**	6	CP027	6	pencil
3.8 Carrera S	04.05 - 12.08	261	3824	6	M 97.01	**CL625**	6	CP028	6	pencil
3.8 Carrera 4S	04.05 - 12.08	261	3824	6	M 97.01	**CL625**	6	CP028	6	pencil
911 Targa (996)										
3.6	12.01 - 08.05	235	3596	6	M 96.03	**CL625**	6	CP028	6	pencil
Boxster (986)										
2.5	09.96 - 08.99	150	2480	6	M 96.20	**CL625**	6	CP027	6	pencil
2.7	08.99 - 07.02	162	2687	6	M 96.22	**CL625**	6	CP028	6	pencil
2.7	07.02 - 12.04	168	2687	6	M 96.23	**CL625**	6	CP028	6	pencil
S 3.2	08.99 - 07.02	185	3179	6	M 96.21	**CL625**	6	CP028	6	pencil
S 3.2	07.02 - 12.04	191	3179	6	M 96.24	**CL625**	6	CP028	6	pencil
S 3.2	01.04 - 12.04	196	3179	6	M 96.24	**CL625**	6	CP028	6	pencil
Boxster (987)										
2.7	11.04 - 12.06	176	2687	6	M 96.25	**CL625**	6	CP027	6	pencil
2.7	07.06 - 12.09	180	2687	6	M 97.20	**CL625**	6	CP027	6	pencil
S 3.2	11.04 - 12.06	206	3179	6	M 96.26	**CL625**	6	CP027	6	pencil
S 3.4	07.06 - 12.09	217	3387	6	M 97.21	**CL625**	6	CP027	6	pencil
Cayenne (955)										
3.2	10.03 - 09.07	184	3189	6	M02.2Y	**CL016**	6			pencil
S 4.5	09.02 - 09.07	250	4511	8	M 48.00	**CL620**	8	CP040	8	pencil
4.5 Turbo	09.02 - 09.07	331	4511	8	M 48.50	**CL620**	8	CP040	8	pencil
S 4.5 Turbo	01.04 - 09.07	368	4511	8	M 48.50S	**CL620**	8	CP040	8	pencil
Cayman (987)										
2.7	07.06 - 12.09	180	2687	6	M 97.20	**CL625**	6	CP027	6	pencil
S 3.4	11.05 - 12.09	217	3387	6	M 97.21	**CL625**	6	CP028	6	pencil
Macan										
2.0	07.14 -	174	1984	4	MCN.CC/MCY.NA	**CL032**	4			pencil
PROTON										
Gen 2 (CM_)										
1.3	06.04 -	70	1332	4	S4PE	**CL302**	1			
1.6	06.04 -	82	1597	4	S4PH	**CL302**	1			
Wira										
1.3	08.00 -	55	1298	4	4G 13	**CL302**	1			
1.5	08.00 -	64	1468	4	4G 15	**CL302**	1			
Wira Hatchback										
1.3	08.00 -	55	1298	4	4G 13	**CL302**	1			
1.5	08.00 -	64	1468	4	4G 15 M	**CL302**	1			
RENAULT										
9 (L42_)										
1.2	09.85 - 12.88	40	1237	4	C1G 700/C1G 710	**CL146**	1			
1.4	12.81 - 12.88	44	1397	4	C1J 715/_ 792/_ 796/C2J 730	**CL146**	1			
1.4	09.85 - 12.88	49	1397	4	C2J 766/_ 720/_ 768/C2J 767	**CL118**	1			
1.4	09.81 - 12.85	53	1397	4	C2J 717/C2J 755	**CL146**	1			
1.4 Automatic	09.81 - 12.85	50	1397	4	C2J 757/C2J 718	**CL146**	1			
1.4 Turbo	04.84 - 12.86	77	1397	4	C1J 764/C1J 760	**CL146**	1			
1.4 Turbo	12.86 - 12.89	85	1397	4	C1J 764/C1J 760	**CL146**	1			
1.7	10.86 - 12.88	54	1721	4	F3N 718	**CL118**	1			
1.7	10.86 - 12.88	55	1721	4	F2N 730	**CL118**	1			
1.7	09.84 - 12.89	59	1721	4	F2N 704/F2N 700	**CL118**	1			
1.7	10.86 - 12.88	65	1721	4	F2N 798/F2N 710/F2N 708	**CL118**	1			
1.7	06.87 - 12.88	69	1721	4	F3N 708	**CL118**	1			
11 (B/C37_)										
1.2	10.84 - 12.88	40	1237	4	C1G 700/C1G 710	**CL146**	1			
1.4	03.83 - 12.88	44	1397	4	C1J 715/C2J 730	**CL118**	1			
1.4	03.83 - 12.88	49	1397	4	C2J 766/_ 720/_ 768/C2J 767	**CL146**	1			
1.4	03.83 - 12.85	50	1397	4	C2J 757/C2J 718	**CL146**	1			
1.4	05.83 - 12.85	53	1397	4	C2J 717	**CL118**	1			SAE
			1397	4	C2J 717	**CL146**	1			DIN
1.4 Turbo	04.84 - 12.86	77	1397	4	C1J 764/C1J 760	**CL118**	1			
1.4 Turbo	10.86 - 12.88	85	1397	4	C1J 770/C1J 782	**CL118**	1			
1.7	10.86 - 12.88	54	1721	4	F2N 730	**CL118**	1			
1.7	10.84 - 12.88	55	1721	4	F3N 718	**CL118**	1			
1.7	10.83 - 12.87	59	1721	4	F2N 704/F2N 700	**CL118**	1			
1.7	06.87 - 12.88	64	1721	4	F2N 732/F2N 742	**CL118**	1			
1.7	10.86 - 12.88	65	1721	4	F2N 798/F2N 710/F2N 708	**CL118**	1			

model	year	kW	cm³	cyl	engine	coil	pcs	boot	pcs	info
RENAULT										
18 (134_)										
1.4	04.78 - 07.86	47	1397	4	847 720/847 722	**CL146**	1			
1.6	04.82 - 07.86	54	1647	4	841 717/A2M 723	**CL146**	1			
1.6	04.78 - 09.82	58	1647	4	841 725/841 726	**CL146**	1			
1.6 TS	05.82 - 07.86	71	1647	4	A6M 725/A6M 726	**CL146**	1			
1.6 Turbo	10.82 - 07.86	92	1565	4	A5L 718/A5L 717	**CL146**	1			
2.0	05.82 - 07.86	77	1995	4	J6R 716	**CL146**	1			
2.2 i	06.84 - 07.86	76	2165	4	J7T 718	**CL118**	1			
18 Variable (135_)										
1.4	05.79 - 07.86	47	1397	4	847 720/847 722	**CL146**	1			
1.6	01.82 - 07.86	54	1647	4	841 717/A2M 723	**CL146**	1			
1.6	05.79 - 09.82	58	1647	4	841 725/841 726	**CL146**	1			
1.6 4x4	01.83 - 07.86	54	1647	4	841 717/A2M 723	**CL146**	1			
1.6 4x4	02.79 - 06.81	58	1647	4	841 725	**CL146**	1			
1.6 TS	05.82 - 07.86	71	1647	4	A6M 725/A6M 726	**CL146**	1			
1.6 Turbo	10.82 - 07.86	92	1565	4	A5L 718/A5L 717	**CL146**	1			
2.0	10.81 - 07.86	77	1995	4	J6R 716	**CL146**	1			
2.0 4x4	05.83 - 12.86	76	1995	4	J6R 714/J6R 716	**CL146**	1			
19 I (B/C53_)										
1.4	01.88 - 12.92	59	1390	4	E6J 701	**CL118**	1			
1.4 cat	01.89 - 04.92	43	1397	4	C3J 710	**CL118**	1			
1.4	01.89 - 12.89	43	1397	4	C2J 772	**CL118**	1			
1.7	09.88 - 04.92	54	1721	4	F3N 741/F3N 740	**CL118**	1			
1.7	09.88 - 04.92	66	1721	4	F3N 743/F3N 742	**CL118**	1			
1.8 16V	06.89 - 04.92	99	1764	4	F7P 704	**CL118**	1			
19 I Chamade (L53_)										
1.4	07.88 - 04.92	43	1397	4	C3J 710/C2J 772	**CL118**	1			
1.7	07.88 - 04.92	66	1721	4	F3N 743/F3N 742	**CL118**	1			
1.7	08.88 - 12.92	79	1721	4	F3N 746	**CL118**	1			
1.8 16V	10.89 - 04.92	99	1764	4	F7P 704	**CL118**	1			
19 II (B/C53_)										
1.2	04.92 - 12.95	40	1237	4	C1G 730	**CL118**	1			
1.4	04.92 - 12.95	43	1397	4	C3J 710	**CL118**	1			
1.4	01.92 - 12.95	55	1390	4	E7J 742	**CL118**	1			
1.4	01.92 - 12.95	59	1390	4	E7J 706/E6J 700	**CL118**	1			
1.7	04.92 - 12.95	54	1721	4	F3N 741/F3N 740	**CL118**	1			
1.7	04.92 - 12.95	66	1721	4	F3N 743	**CL118**	1			
1.8	04.92 - 12.95	65	1794	4	F3P 706/_ 707/_ 760/F3P 708	**CL118**	1			
1.8	04.92 - 12.95	66	1794	4	F3P 706/F3P 760	**CL118**	1			
1.8	05.94 - 12.95	79	1794	4	F3P 765/F3P 682	**CL122**	1			
1.8	04.92 - 05.94	81	1794	4	F3P 700	**CL118**	1			
1.8 16V	04.92 - 12.95	99	1764	4	F7P 704	**CL118**	1			
19 II Cabriolet (D53_, 853_)										
1.7	04.92 - 09.93	66	1721	4	F3N 743	**CL118**	1			
1.8	04.92 - 06.96	65	1794	4	F3P 706/_ 707/_ 760/F3P 708	**CL118**	1			
1.8	09.93 - 06.96	66	1794	4	F3P 706/F3P 760	**CL118**	1			
1.8	07.94 - 06.96	79	1794	4	F3P 765/F3P 682/F3P 764	**CL118**	1			
1.8 16V	04.92 - 06.96	99	1764	4	F7P 704	**CL118**	1			
19 II Chamade (L53_)										
1.4	04.92 - 12.95	43	1397	4	C3J 710	**CL118**	1			
1.4	11.93 - 12.95	55	1390	4	E7J 742	**CL118**	1			
1.4	10.94 - 11.95	57	1390	4	E6J 700	**CL118**	1			
1.4	10.94 - 11.95	59	1390	4	E7J 706	**CL118**	1			
1.7	04.92 - 12.95	54	1721	4	F3N 741/F3N 740	**CL118**	1			
1.7	05.92 - 11.95	55	1721	4	F3N 741/F3N 740	**CL118**	1			
1.7	04.92 - 12.95	66	1721	4	F3N 743	**CL118**	1			
1.7	01.93 - 08.95	68	1721	4	F2N 720/F2N 721	**CL118**	1			
1.8	04.92 - 12.95	65	1794	4	F3P 706/_ 707/_ 760/F3P 708	**CL118**	1			
1.8	04.92 - 12.95	66	1794	4	F3P 706/F3P 760	**CL118**	1			
1.8	05.92 - 09.94	67	1794	4	F3P 765	**CL118**	1			
1.8	05.94 - 12.95	79	1783	4	F3P 682	**CL122**	1			
1.8	05.92 - 11.95	79	1794	4	F3P 706/F3P 700	**CL118**	1			
1.8	04.92 - 05.94	81	1794	4	F3P 700	**CL118**	1			
1.8 16V	04.92 - 12.95	99	1764	4	F7P 704	**CL118**	1			
19 II Van (S53_)										
1.2	03.92 - 12.95	40	1237	4	C1G 730	**CL118**	1			
21 (B48_)										
1.7	09.89 - 10.92	54	1721	4	F3N 726	**CL118**	1			SAE
						CL146	1			DIN
1.7	07.89 - 05.93	55	1721	4	F2N 712/F3N 726	**CL118**	1			
1.7	09.89 - 06.94	66	1721	4	F3N 723/F3N 722	**CL118**	1			
2.0	02.90 - 10.92	99	1995	4	J7R 740	**CL118**	1			

RENAULT 21 (B48_) ▶

model	year	kW	cm³	cyl	engine	coil	pcs	boot	pcs	info
RENAULT										
21 (B48_)										
2.0 4x4	09.90 - 10.92	99	1995	4	J7R 740	**CL118**	1			
2.2	09.89 - 06.94	79	2165	4	J7T 754/J7T 755	**CL118**	1			
2.2 4x4	07.90 - 06.94	79	2165	4	J7T 754/J7T 755	**CL118**	1			
21 Combi (K48_)										
1.7	06.86 - 12.89	54	1721	4	F2N 750	**CL118**	1			
1.7	06.86 - 03.93	55	1721	4	F2N 712	**CL118**	1			
1.7	06.87 - 04.89	64	1721	4	F2N 752	**CL118**	1			
1.7	10.86 - 12.88	65	1721	4	F2N 710	**CL118**	1			
1.7	10.89 - 12.93	66	1721	4	F3N 723/F3N 722	**CL118**	1			
1.7	06.86 - 12.89	69	1721	4	F3N 723/F3N 722	**CL118**	1			
1.7 cat	05.88 - 06.93	54	1721	4	F3N 726	**CL118**	1			
2.0	06.91 - 05.93	75	1995	4	J6R 759/J6R 758/J6R 792	**CL118**	1			
2.0	06.86 - 12.88	85	1995	4	J7R 750/J7R 751	**CL118**	1			
2.0	03.86 - 12.93	88	1995	4	J7R 747/J7R 746	**CL118**	1			
2.0	06.90 - 02.94	99	1995	4	J7R 740	**CL118**	1			
2.0 4x4	03.89 - 12.93	88	1995	4	J7R 747/J7R 746	**CL118**	1			
2.2	06.86 - 11.93	79	2165	4	J7T 754/J7T 755	**CL118**	1			
2.2 4x4	06.86 - 12.93	79	2165	4	J7T 754/J7T 755	**CL118**	1			
21 Sedan (L48_)										
1.7	07.86 - 02.94	54	1721	4	F3N 726 /F2N 750	**CL118**	1			
1.7	03.86 - 12.87	55	1721	4	F2N 712	**CL118**	1			
1.7	06.87 - 04.89	64	1721	4	F2N 752	**CL118**	1			
1.7	03.86 - 03.93	65	1721	4	F2N 710	**CL118**	1			
1.7	03.86 - 02.94	69	1721	4	F3N 723/F3N 722	**CL118**	1			
1.7	09.89 - 02.94	66	1721	4	F3N 723/F3N 722	**CL118**	1			
2.0	03.86 - 10.93	75	1995	4	J6R 759/J6R 758	**CL118**	1			
2.0	04.88 - 06.89	76	1995	4	J6R 793/J6R 792	**CL118**	1			
2.0	05.91 - 10.93	78	1995	4	J6R 758	**CL118**	1			
2.0	03.86 - 12.88	85	1995	4	J7R 750/J7R 751	**CL118**	1			
2.0	03.86 - 12.93	88	1995	4	J7R 747/J7R 746	**CL118**	1			
2.0	02.90 - 06.94	99	1995	4	J7R 740	**CL118**	1			
2.0 4x4	12.89 - 02.94	99	1995	4	J7R 740	**CL118**	1			
2.0 Turbo	02.90 - 10.92	119	1995	4	J7R 756	**CL118**	1			
2.0 Turbo	04.87 - 03.90	129	1995	4	J7R 752	**CL118**	1			
2.0 Turbo 4x4	02.90 - 10.92	119	1995	4	J7R 756	**CL118**	1			
2.0 Turbo 4x4	08.89 - 10.93	129	1995	4	J7R 752	**CL118**	1			
2.2	07.86 - 02.94	79	2165	4	J7T 754/J7T 755	**CL118**	1			
2.2 4x4	07.90 - 02.94	79	2165	4	J7T 754/J7T 755	**CL118**	1			
25 (B29_)										
2.0	04.84 - 12.92	74	1995	4	J6R 763/J6R 707/J6R 760	**CL118**	1			
2.0	03.87 - 12.93	88	1995	4	J7R 723/J7R 722	**CL118**	1			
2.0 12V	06.89 - 12.92	99	1995	4	J7R 726	**CL118**	1			
2.0 12V	06.88 - 12.93	103	1995	4	J7R 721/J7R 720	**CL118**	1			
2.2	11.85 - 03.89	76	2165	4		**CL118**	1			
2.2	09.86 - 12.92	79	2165	4	J7T 708/J7T 733 /J7T 732	**CL118**	1			
2.2	04.84 - 12.89	89	2165	4	J7T 715	**CL118**	1			
2.2	04.84 - 12.89	91	2165	4	J7T 730/J7T 731	**CL118**	1			
2.4 V6 Turbo	10.84 - 05.90	133	2458	6	Z7U 702	**CL118**	1			
2.5 V6 Turbo	01.90 - 12.92	151	2458	6	Z7U 700	**CL118**	1			
2.8 V6	06.87 - 02.90	115	2849	6	Z7W 700	**CL118**	1			
2.8 V6 Injection	06.87 - 12.92	110	2849	6	Z7W 706/Z7W 707/Z7W 709	**CL118**	1			
Avantime (DE0_)										
2.0 16V Turbo	11.01 - 05.03	120	1998	4	F4R 760/F4R 761	**CL100**	4			pencil
3.0 V6	09.01 - 05.03	152	2946	6	L7X 720/L7X 721	**CL135**	6			pencil
Captur										
0.9 TCe 90	06.13 -	66	898	3		**CL155**	3			pencil
1.2 TCe 120	06.13 -	88	1197	4		**CL155**	4			pencil
Clio Grandtour (KR0/1_)										
1.2 16V Hi-Flex	07.08 -	55	1149	4	D4F 740	**CL149**	1			coil with ignition cables
						CL150	1			coil without ignition cables
1.2 16V	02.08 -	55	1149	4	D4F 740	**CL150**	1			
1.2 16V	02.08 -	58	1149	4	D4F 764	**CL150**	1			
1.2 16V	02.08 -	74	1149	4	D4F 784	**CL150**	1			
1.4 16V	02.10 -	72	1390	4	K4J 780	**CL100**	4			pencil
1.6 16V	02.08 -	82	1598	4	K4M 800/K4M 801	**CL100**	4			pencil
1.6 16V	11.08 -	94	1598	4	K4M 862	**CL100**	4			pencil
Clio Grandtour IV										
0.9 TCe 90	01.13 -	66	898	3		**CL155**	3			pencil
1.2 16V	01.13 -	54	1149	4	D4F 740	**CL150**	1			
1.2 TCe 120	03.13 -	88	1197	4		**CL155**	4			pencil

model	year	kW	cm³	cyl	engine	coil	pcs	boot	pcs	info
RENAULT										
Clio I (B/C57_, 5/357_)										
1.2	01.96 - 09.98	40	1149	4	D7F 730	**CL131**	1			
1.2	01.91 - 06.96	40	1171	4	E7F 706	**CL118**	1			
1.2	01.96 - 12.96	40	1239	4	C3G 720	**CL122**	1			
1.2	01.96 - 09.98	43	1149	4	D7F 730	**CL131**	1			
1.2	05.90 - 09.98	43	1171	4	E7F 750	**CL118**	1			
1.2	05.90 - 03.96	44	1171	4	E5F 710	**CL118**	1			
1.4	01.91 - 09.98	55	1390	4	E7J 756/E7J 757	**CL118**	1			
1.4	01.91 - 09.98	58	1390	4	E7J 719 /E7J 718	**CL118**	1			
1.4	01.91 - 09.98	59	1390	4	E7J 711	**CL118**	1			
1.8	01.91 - 09.98	65	1794	4	F3P 710 /F3P 714	**CL118**	1			
1.8	08.90 - 04.96	66	1783	4	F3P 755	**CL118**	1			
1.8	08.94 - 09.98	66	1794	4	F3P 755 /F3P 754	**CL118**	1			
1.8 16V	01.91 - 03.96	99	1764	4	F7P 722	**CL118**	1			
1.8 RSi	08.95 - 09.98	79	1783	4	F3P 758	**CL118**	1			
1.8 RSi	01.93 - 08.95	80	1794	4	F3P 712	**CL118**	1			
2.0 Williams	01.94 - 09.98	108	1998	4	F7R 700	**CL118**	1			
Clio I Van (S57_)										
1.2	01.91 - 09.98	40	1171	4	E7F 706	**CL118**	1			
Clio II (BB0/1/2_, CB0/1/2_)										
1.2	09.98 - 10.99	43	1149	4	D7F 766/_720/_764/_726/_746	**CL131**	1			year
	10.99 -	43	1149	4	D7F 766/_720/_764/_726/_746	**CL116**	1			year
1.2	03.99 - 05.01	44	1149	4	D7F 722	**CL116**	1			
1.2	06.01 -	55	1149	4		**CL116**	1			coil 4xPIN
			1149	4		**CL130**	1			coil with ignition cables
1.2 16V	06.01 -	55	1149	4	D4F 728/_714/_706/_712/_722	**CL150**	1			coil without ignition cables
	06.04 -	55	1149	4	D4F 728/_714/_706/_712/_722	**CL130**	1			coil with ignition cables / year
	06.07 -	55	1149	4	D4F 728/_714/_706/_712/_722	**CL149**	1			coil with ignition cables / year
1.4	09.98 - 05.05	55	1390	4	E7J 634/E7J 780/K7J 700	**CL102**	1			coil for cyl 2-3
						CL128	1			coil for cyl 1-4
1.4 16V	10.99 - 09.04	70	1390	4	K4J 712/K4J 713	**CL100**	4			pencil
1.4 16V	08.00 -	72	1390	4	K4J 712/K4J 711/K4J 710/_713	**CL100**	4			pencil
1.6	09.98 - 05.05	66	1598	4	K7M 744/K7M 745	**CL102**	1			coil for cyl 2-3
						CL128	1			coil for cyl 1-4
1.6 16V	09.98 -	79	1598	4	K4M 743/_748/_740/K4M _	**CL100**	4			pencil
2.0 16V Sport	02.00 -	124	1998	4	F4R 730/F4R 736	**CL131**	1			
2.0 16V Sport	01.04 -	132	1998	4	F4R 738	**CL131**	1			
3.0 V6 Sport	11.00 - 12.02	166	2946	6	L7X 760	**CL135**	6			pencil
3.0 V6 Sport	12.02 -	187	2946	6	L7X 762	**CL135**	6			pencil
Clio II Van (SB0/1/2_)										
1.1	09.98 -	43	1149	4	D7F 720/D7F 726/D7F 746	**CL131**	1			
1.2	03.99 - 10.03	44	1149	4	D7F 722/D7F 726/D7F 746	**CL116**	1			
Clio III (BR0/1, CR0/1)										
1.2 16V	06.05 - 05.08	48	1149	4	D4F 740	**CL134**	1			coil with ignition cables / year
	06.05 - 05.08	48	1149	4	D4F 740	**CL149**	1			coil with ignition cables / year
	06.08 -	48	1149	4	D4F 740	**CL150**	1			coil without ignition cables / year
1.2 16V	06.05 - 05.08	55	1149	4	D4F 740	**CL134**	1			coil with ignition cables / year
	06.05 - 05.08	55	1149	4	D4F 740	**CL149**	1			coil with ignition cables / year
	06.08 -	55	1149	4	D4F 740	**CL150**	1			coil without ignition cables / year
1.2 16V	06.05 - 05.08	58	1149	4	D4F 764	**CL134**	1			coil with ignition cables / year
	06.05 - 05.08	58	1149	4	D4F 764	**CL149**	1			coil with ignition cables / year
	06.08 -	58	1149	4	D4F 764	**CL150**	1			coil without ignition cables / year
1.2 16V	05.07 -	74	1149	4	D4F 784	**CL150**	1			
1.2 16V	09.10 -	76	1149	4	D4F 786	**CL116**	1			
1.2 16V Hi-Flex	07.08 -	55	1149	4	D4F 740/D4F 742	**CL149**	1			coil with ignition cables
						CL150	1			coil without ignition cables
1.4 16V	06.05 -	72	1390	4	K4J 780	**CL100**	4			pencil
1.6 16V	06.05 -	82	1598	4	K4M 800/K4M 801	**CL100**	4			pencil
1.6 16V	06.05 -	65	1598	4	K4M 804	**CL100**	4			pencil
1.6 16V GT	06.09 -	94	1598	4	K4M 862	**CL100**	4			pencil
2.0 16V Sport	02.06 -	145	1998	4	F4R 830	**CL100**	4			pencil
2.0 16V Sport	09.08 -	148	1998	4	F4R 830	**CL100**	4			pencil
Clio IV										
0.9 TCe 90	11.12 -	66	898	3		**CL155**	3			pencil
1.2 TCe 120	03.13 -	88	1197	4		**CL155**	4			pencil
1.6 RS	03.13 -	147	1618	4	M5M 450/M5M 400	**CL900**	4			pencil
Duster										
1.6 16V	02.12 -	75	1598	4	K4M 616	**CL100**	4			pencil
2.0	02.12 -	98	1998	4		**CL100**	4			pencil
Espace I (J11_)										
2.0	01.88 - 12.90	74	1995	4	J6R 734	**CL118**	1			
2.0	07.84 - 12.90	80	1995	4	J6R 234/J6R 236	**CL118**	1			

RENAULT Espace I (J11_) ▶

model	year	kW	cm³	cyl	engine	coil	pcs	boot	pcs	info
RENAULT										
Espace I (J11_)										
2.0 i	01.89 - 12.90	87	1995	4	J7R 760	**CL118**	1			
2.0 i Quadra	03.88 - 12.92	87	1995	4	J7R 760	**CL118**	1			
2.2	07.86 - 12.90	79	2165	4	J7T 770	**CL118**	1			
2.2 Quadra	01.88 - 12.90	79	2165	4	J7T 770	**CL118**	1			
Espace II (J/S63_)										
2.0	01.91 - 10.96	76	1995	4	J7R 768	**CL118**	1			
2.2	01.91 - 10.96	79	2165	4	J7T 772/J7T 776/J7T 773	**CL118**	1			
2.2 4x4	03.91 - 12.96	79	2165	4	J7T 772/J7T 773	**CL118**	1			
2.8 V6	01.91 - 10.96	110	2849	6	Z7W 717/Z7W 712/Z7W 713	**CL118**	1			
Espace III (JE0_)										
2.0	11.96 - 04.97	84	1998	4	F3R 769/F3R 728/F3R 768	**CL124**	2			SAE / year / twin coil
	04.97 - 10.00	84	1998	4	F3R 769/F3R 728/F3R 768	**CL123**	2			PIN / year / twin coil
2.0	09.01 - 10.02	102	1998	4	F4R 701/F4R 700	**CL100**	4			pencil
2.0 16V	10.98 - 10.02	103	1998	4	F4R 701/F4R 700	**CL100**	4			pencil
3.0	11.96 - 10.98	123	2963	6	Z7X 775	**CL124**	1			1st twin coil (black socket)
	11.96 - 10.98	123				**CL125**	1			2nd twin coil (grey socket)
	11.96 - 10.98	123				**CL126**	1			3rd twin coil (brown socket)
3.0 V6 24V	10.98 - 10.02	140	2946	6	L7X 727	**CL135**	6			pencil
Espace IV (JK0/1_)										
2.0	11.02 -	100	1998	4	F4R 792	**CL100**	4			pencil
2.0	04.05 -	125	1998	4	F4R 897/F4R 796/_ 896/_ 797	**CL100**	4			pencil
2.0 Turbo	11.02 -	120	1998	4	F4R 796/F4R 795/_ 794/_ 797	**CL100**	4			pencil
Fluence (L30_)										
1.6 16V	02.10 -	81	1598	4	K4M 839/K4M 838	**CL100**	4			pencil
2.0 16V	02.10 -	103	1998	4	M4R 751/M4R 714	**CL153**	4	CP050	4	pencil
Fuego (136_)										
2.0 TX/GTX	10.80 - 10.85	81	1995	4	J6R 713/J6R 726/J6R 715	**CL146**	1			
Grand Scénic II (JM0/1_)										
1.6	04.04 -	83	1598	4	K4M 761/K4M 782	**CL100**	4			pencil
2.0	04.04 -	99	1998	4	F4R 771/F4R 770	**CL100**	4			pencil
2.0	04.04 -	120	1998	4	F4R 776	**CL100**	4			pencil
Grand Scénic III (JZ0/1_)										
1.2 TCe	04.12 -	85	1197	4	H5F 400	**CL155**	4			pencil
1.2 TCe	01.13 -	97	1197	4	H5F 404	**CL155**	4			pencil
1.4 16V	02.09 -	96	1397	4	H4J 700	**CL152**	4			pencil
1.6 16V	02.09 -	81	1598	4	K4M 858	**CL100**	4			pencil
2.0 16V	02.09 -	103	1997	4	M4R 711	**CL153**	4	CP050	4	pencil
Kadjar										
1.2 TCe 130	06.15 -	96	1197	4	H5F 408	**CL155**	4			pencil
Kangoo (KC0/1_)										
1.2	08.97 - 10.99	43	1149	4	D7F 710/D7F 722/_ 720/_ 726	**CL131**	1			year / rectangular socket
	10.99 -	43	1149	4	D7F 710/D7F 722/_ 720/_ 726	**CL116**	1			year / oval socket
1.2 16V	06.01 -	55	1149	4	D4F 714/D4F 716/_ 712/_ 730	**CL150**	1			coil without ignition cables
	06.01 -	55	1149	4	D4F 714/D4F 716/_ 712/_ 730	**CL134**	1			coil with ignition cables / year
	06.04 -	55	1149	4	D4F 714/D4F 716/_ 712/_ 730	**CL130**	1			coil with ignition cables / year
	06.07 -	55	1149	4	D4F 714/D4F 716/_ 712/_ 730	**CL149**	1			coil with ignition cables / year
1.4	08.97 -	55	1390	4	E7J 634/K7J 701/E7J 635/E7J 780/K7J 700	**CL102**	1			coil for cyl 2-3
						CL128	1			coil for cyl 1-4
1.6 16V	06.01 -	70	1598	4	K4M 750/K4M 753/K4M 752	**CL100**	4			pencil
1.6 16V 4x4	10.01 -	70	1598	4	K4M 750/K4M 753/K4M 752	**CL100**	4			pencil
Kangoo / Grand Kangoo (KW0/1_)										
1.2 TCe 115	07.13 -	84	1197	4		**CL155**	4			pencil
1.6 16V Hi-Flex	02.08 -	78	1598	4	K4M 834/K4M 850	**CL100**	4			pencil
1.6 16V	02.08 -	78	1598	4	K4M 830/K4M 831	**CL100**	4			pencil
Kangoo BeBop (KW0/1_)										
1.6	02.09 -	78	1598	4	K4M 830	**CL100**	4			pencil
Kangoo Express (FC0/1_)										
1.2	08.97 - 10.99	43	1149	4	D7F 710/D7F 722/_ 720/_ 726	**CL131**	1			year / rectangular socket
	10.99 -	43	1149	4	D7F 710/D7F 722/_ 720/_ 726	**CL116**	1			year / oval socket
1.2	07.98 - 07.01	44	1149	4	D7F 766/D7F 764	**CL116**	1			
1.2 16V	10.01 -	55	1149	4	D4F 714/D4F 712/D4F 730	**CL150**	1			coil without ignition cables
	10.01 -	55	1149	4	D4F 714/D4F 712/D4F 730	**CL134**	1			coil with ignition cables / year
	06.04 -	55	1149	4	D4F 714/D4F 712/D4F 730	**CL130**	1			coil with ignition cables / year
	06.07 -	55	1149	4	D4F 714/D4F 712/D4F 730	**CL149**	1			coil with ignition cables / year
1.4	08.97 -	55	1390	4	E7J 634/K7J 701/_ 635/_ 780	**CL102**	1			twin coil for cyl 2-3
						CL128	1			twin coil for cyl 1-4
1.6 16V	10.01 -	70	1598	4	K4M 752	**CL100**	4			pencil
1.6 16V 4x4	10.01 -	70	1598	4	K4M 750/K4M 753/K4M 752	**CL100**	4			pencil
Kangoo Express (FW0/1_)										
1.2 TCe 115	07.13 -	84	1197	4		**CL155**	4			pencil
1.6 16V	02.08 -	78	1598	4	K4M 830	**CL100**	4			pencil

RENAULT Kangoo Express (FW0/1_) ▶

model	year	kW	cm³	cyl	engine	coil	pcs	boot	pcs	info
RENAULT										
Kangoo Express (FW0/1_)										
1.6 16V LPG	02.08 -	72	1598	4	K4M 834	**CL100**	4			pencil
Koleos (HY_)										
2.5	09.08 -	126	2488	4	2TR700/2TR702/2TR703	**CL911**	4	CP019		pencil
2.5 4x4	09.08 -	126	2488	4	2TR700/2TR702/2TR703	**CL911**	4	CP019		pencil
Laguna Coupe (DT0/1)										
2.0 16V Turbo	09.08 -	125	1998	4	F4Rt 811/F4R 811	**CL100**	4			pencil
2.0 GT	09.08 -	150	1998	4	F4R 800	**CL100**	4			pencil
Laguna I (B56_, 556_)										
1.6 16V	11.97 - 03.99	79	1598	4	K4M 720/K4M 724	**CL102**	1			twin coil for cyl 2-3 / year
	11.97 - 03.99	79	1598	4	K4M 720/K4M 724	**CL128**	1			twin coil for cyl 1-4 / year
	03.99 - 03.01	79	1598	4	K4M 720/K4M 724	**CL100**	4			year / pencil
1.8	11.93 - 03.01	66	1794	4	F3P 720/F3P 724	**CL118**	1			
1.8	08.95 - 03.01	66	1783	4	F3P 678	**CL118**	1			with distributor / engine code
	08.95 - 04.97	66	1783	4	F3P 670	**CL124**	2			twin coil 2xSAE / year
	04.97 - 03.01	66	1783	4	F3P 670	**CL123**	2			twin coil 2xPIN / year
1.8	06.95 - 04.97	69	1783	4	F3P 674	**CL124**	2			twin coil 2xSAE / year
	04.97 - 02.01	69	1783	4	F3P 674	**CL123**	2			twin coil 2xPIN / year
1.8	08.95 - 03.01	69	1794	4	F3P 720/F3P 724	**CL118**	1			
1.8 16V	04.98 - 03.01	88	1783	4	F4P 760	**CL100**	4			pencil
2.0	03.99 - 03.01	80	1998	4	F3R 611	**CL124**	2			twin coil
2.0	11.93 - 03.01	83	1998	4	F3R 722/F3R 723	**CL118**	1			
2.0	06.95 - 04.97	84	1998	4	F3R 768	**CL124**	2			twin coil 2xSAE / year
	04.97 - 02.01	84	1998	4	F3R 768	**CL123**	2			twin coil 2xPIN / year
2.0	09.99 - 02.01	102	1998	4	F4R 780	**CL100**	4			pencil
2.0	06.95 - 02.01	103	1948	4	N7Q 700/N7Q 704	**CL136**	1			twin coil for cyl 1-4
						CL137	1			twin coil for cyl 2-3
2.0 16V	06.95 - 03.01	102	1948	4	N7Q 700/N7Q 704	**CL136**	1			twin coil for cyl 1-4
						CL137	1			twin coil for cyl 2-3
2.0 16V	09.99 - 03.01	103	1998	4	F4R 780	**CL100**	4			pencil
3.0	11.93 - 03.01	123	2963	6	Z7X 765/Z7X 760	**CL124**	1			1st twin coil (black socket)
						CL125	1			2nd twin coil (grey socket)
						CL126	1			3rd twin coil (brown socket)
3.0 24V	03.97 - 03.01	140	2946	6	L7X 700/L7X 701	**CL140**	1			rail coil for 3 cylinders
Laguna I Grandtour (K56_)										
1.6 16V	11.97 - 03.99	79	1598	4	K4M 720/K4M 724	**CL102**	1			year / coil for cyl 2-3
	11.97 - 03.99	79	1598	4	K4M 720/K4M 724	**CL128**	1			year / coil for cyl 1-4
	03.99 - 03.01	79	1598	4	K4M 720/K4M 724	**CL100**	4			year / pencil
1.8	09.95 - 03.01	66	1783	4	F3P 678	**CL118**	1			with distributor / engine code
	09.95 - 04.97	66	1783	4	F3P 670	**CL124**	2			coil 2xSAE / year / engine code
	04.97 - 03.01	66	1783	4	F3P 670	**CL123**	2			coil 2xPIN / year / engine code
1.8	09.95 - 03.01	69	1794	4	F3P 720/F3P 724	**CL118**	1			
1.8 16V	04.98 - 03.01	88	1783	4	F4P 760	**CL100**	4			pencil
2.0	09.95 - 03.01	83	1998	4	F3R 722/F3R 723	**CL118**	1			
2.0 16V	09.95 - 03.01	102	1948	4	N7Q 700/N7Q 704	**CL136**	1			twin coil for cyl 1-4
						CL137	1			twin coil for cyl 2-3
2.0 16V	09.99 - 03.01	103	1998	4	F4R 780	**CL100**	4			pencil
3.0	02.96 - 03.01	123	2963	6	Z7X 765	**CL124**	1			1st twin coil (black socket)
						CL125	1			2nd twin coil (grey socket)
						CL126	1			3rd twin coil (brown socket)
3.0 24V	03.97 - 03.01	140	2946	6	L7X 700/L7X 701	**CL140**	1			rail coil for 3 cylinders
Laguna II (BG0/1_)										
1.6 16V	03.01 -	79	1598	4	K4M 714/K4M 710	**CL100**	4			pencil
1.6 16V	02.05 -	82	1598	4	K4M 716	**CL100**	4			pencil
1.8 16V	03.01 -	86	1783	4	F4P 774/F4P 770	**CL100**	4			pencil
1.8 16V	03.01 -	85	1783	4	F4P 774/_770/_773/_775/_771	**CL100**	4			pencil
1.8 16V	03.01 -	88	1783	4	F4P 770/F4P 773	**CL100**	4			pencil
1.8 16V	03.01 -	89	1783	4	F4P 772/F4P 770	**CL100**	4			pencil
2.0 16V	08.02 -	99	1998	4	F4R 713/F4R 715/_712/_714	**CL100**	4			pencil
2.0 16V	01.05 -	125	1998	4	F4R 787/F4R 786/F4R 784	**CL100**	4			pencil
2.0 16V	01.05 -	150	1998	4	F4R 887/F4R 886	**CL100**	4			pencil
2.0 16V IDE	04.01 -	103	1998	4	F5R 701/F5R 700	**CL131**	1			
2.0 16V Turbo	01.03 -	120	1998	4	F4R 764/F4R 787/_786/_765	**CL100**	4			pencil
3.0 V6 24V	03.01 -	152	2946	6	L7X 731	**CL135**	6			pencil
Laguna II Grandtour (KG0/1_)										
1.6 16V	02.05 -	82	1598	4	K4M 716	**CL100**	4			pencil
1.6 16V	03.01 -	79	1598	4	K4M 714/K4M 710	**CL100**	4			pencil
1.8 16V	03.01 -	85	1783	4	F4P 774/F4P 770/_771/_775	**CL100**	4			pencil
1.8 16V	03.01 -	86	1783	4	F4P 770	**CL100**	4			pencil
1.8 16V	03.01 -	88	1783	4	F4P 770/F4P 773	**CL100**	4			pencil
1.8 16V	03.01 -	89	1783	4	F4P 774/F4P 770	**CL100**	4			pencil
2.0 16V	08.02 -	99	1998	4	F4R 713/F4R 715/_712/_714	**CL100**	4			pencil

RENAULT Laguna II Grandtour (KG0/1_)

model	year	kW	cm³	cyl	engine	coil	pcs	boot	pcs	info
RENAULT										
Laguna II Grandtour (KG0/1_)										
2.0 16V	01.05 -	125	1998	4	F4R 787/F4R 786/F4R 784	**CL100**	4			pencil
2.0 16V	01.05 -	150	1998	4	F4R 887/F4R 886	**CL100**	4			pencil
2.0 16V IDE	04.01 -	103	1998	4	F5R 701/F5R 700	**CL131**	1			
2.0 16V Turbo	01.03 -	120	1998	4	F4R 764/F4R 787/_ 786/_ 765	**CL100**	4			pencil
3.0 V6 24V	03.01 -	152	2946	6	L7X 731	**CL135**	6			pencil
Laguna III (BT0/1)										
1.6 16V	10.07 -	81	1598	4	K4M 824	**CL100**	4			pencil
2.0 16V	10.07 -	103	1998	4	M4R 704	**CL153**	4	CP050	4	pencil
2.0 16V Hi-Flex	10.07 -	103	1997	4	M4R 726	**CL153**	4	CP050	4	pencil
2.0 16V Turbo	10.07 -	125	1998	4	F4R 811	**CL100**	4			pencil
2.0 GT	03.08 -	150	1998	4	F4R 800	**CL100**	4			pencil
Laguna III Grandtour (KT0/1)										
1.6 16V	10.07 -	81	1598	4	K4M 824	**CL100**	4			pencil
2.0 16V	10.07 -	103	1998	4	M4R 704	**CL153**	4	CP050	4	pencil
2.0 16V Hi-Flex	10.07 -	103	1997	4	M4R 704/M4R 726	**CL153**	4	CP050	4	pencil
2.0 16V Turbo	10.07 -	125	1998	4	F4R 811	**CL100**	4			pencil
2.0 GT	03.08 -	150	1998	4	F4R 800	**CL100**	4			pencil
Latitude (L70_)										
2.0 16V	02.11 -	103	1997	4	M4R 746	**CL153**	4	CP050	4	pencil
Logan I (LS_)										
1.4	09.04 -	55	1390	4	K7J 710	**CL116**	1			
1.6	09.04 -	64	1598	4	K7M 710	**CL116**	1			
1.6	04.07 -	77	1598	4	K4M 690	**CL100**	4			pencil
Logan I Combi (KS_)										
1.4	10.07 -	55	1390	4	K7J 710	**CL116**	1			
1.6	04.07 -	64	1598	4	K7M 710	**CL116**	1			
1.6	04.07 -	77	1598	4	K4M 697	**CL100**	4			pencil
Master I Bus (T__)										
28-35 2.0	10.86 - 07.98	58	1995	4	J5R 718	**CL146**	1			
Master I Flatbed (P__)										
2.0	11.89 - 07.93	60	1995	4	J5R 718	**CL146**	1			
28-35 2.0	10.86 - 07.98	58	1995	4	J5R 728	**CL146**	1			
Master I Van (T__)										
28-35 2.0	10.86 - 07.98	58	1995	4	J5R 718	**CL146**	1			
Megane CC (EZ0/1_)										
1.2 TCe	01.13 -	97	1197	4	H5F 404	**CL155**	4			pencil
1.4 TCe	06.10 -	96	1397	4	H4J 700	**CL152**	4			pencil
1.6 16V	06.10 -	81	1598	4	K4M 858	**CL100**	4			pencil
2.0 CVT	06.10 -	103	1997	4	M4R 713/M4R 711	**CL153**	4	CP050	4	pencil
2.0 TCe	06.10 -	132	1998	4	F4R 870/F4R 872	**CL100**	4			pencil
Megane I (BA0/1_)										
1.4 16V	03.99 - 08.03	70	1390	4	K4J 714/K4J 750	**CL100**	4			pencil
1.4 e	01.96 - 02.99	55	1390	4	E7J 764	**CL118**	1			SAE / year / engine code
	02.99 - 08.03	55	1390	4	E7J 626	**CL116**	1			PIN / year / engine code
1.4 Eco	01.96 - 03.99	52	1390	4	E7J 624	**CL118**	1			
1.6 16V	03.99 - 08.03	79	1598	4	K4M 704/K4M 700/_ 708/_ 701	**CL100**	4			pencil
1.6 e	01.96 - 03.97	66	1598	4	K7M 702/K7M 703/K7M 790	**CL101**	1			year / for cyl 2-3 (with CL103)
	01.96 - 03.97	66				**CL103**	1			year / for cyl 1-4 (with CL101)
1.6 e	03.97 - 03.99	66	1598	4	K7M 702/K7M 703/K7M 790	**CL102**	1			year / for cyl 2-3 (with CL128)
	03.97 - 03.99	66				**CL128**	1			year / for cyl 1-4 (with CL102)
	03.97 - 03.99	66				**CL116**	1			year / coil for cyl 1-4-2-3
1.6 i	01.96 - 03.97	55	1598	4	K7M 720	**CL101**	1			year / for cyl 2-3 (with CL103)
	01.96 - 03.97	55				**CL103**	1			year / for cyl 1-4 (with CL101)
1.6 i	03.97 - 03.99	55	1598	4	K7M 720	**CL102**	1			year / for cyl 2-3 (with CL128)
	03.97 - 03.99	55				**CL128**	1			year / for cyl 1-4 (with CL102)
	03.97 - 03.99	55				**CL116**	1			year / coil for cyl 1-4-2-3
1.8 16V	01.01 - 08.03	85	1783	4	F4P 722/F4P 720	**CL100**	4			pencil
2.0 16V	07.96 - 08.03	108	1998	4	F7R 710/F7R 714	**CL123**	2			twin coil
2.0 i	03.99 - 08.03	80	1998	4	F3R 751/F3R 750	**CL123**	2			PIN / twin coil
						CL124	2			SAE / twin coil
2.0 i	01.96 - 04.97	84	1998	4	F3R 751/F3R 750	**CL124**	2			SAE / year / twin coil
	04.97 - 08.03	84	1998	4	F3R 751/F3R 750	**CL123**	2			PIN / year / twin coil
Megane I Cabriolet (EA0/1_)										
1.4 16V	03.99 - 08.03	70	1390	4	K4J 714/K4J 750	**CL100**	4			pencil
1.6 16V	03.99 - 08.03	79	1598	4	K4M 700/K4M 708/K4M 701	**CL100**	4			pencil
1.6 e	10.96 - 03.97	66	1598	4	K7M 702/K7M 703	**CL101**	1			year / for cyl 2-3 (with CL103)
	10.96 - 03.97	66				**CL103**	1			year / for cyl 1-4 (with CL101)
1.6 e	04.97 - 03.99	66	1598	4	K7M 702/K7M 703	**CL102**	1			year / for cyl 2-3 (with CL128)
	04.97 - 03.99	66				**CL128**	1			year / for cyl 1-4 (with CL102)
	04.97 - 03.99	66				**CL116**	1			year / coil for cyl 1-4-2-3

RENAULT Megane I Cabriolet (EA0/1_) ▶

model	year	kW	cm³	cyl	engine	coil	pcs	boot	pcs	info
RENAULT										
Megane I Cabriolet (EA0/1_)										
2.0	04.97 - 08.03	84	1998	4	F3R 750	**CL123**	2			PIN / twin coil
						CL124	2			SAE / twin coil
2.0 16V	01.02 - 08.03	102	1998	4	F4R 746/F4R 770	**CL100**	4			pencil
2.0 16V	10.96 - 11.99	108	1998	4	F7R 710/F7R 714	**CL131**	1			
2.0 16V IDE	11.99 - 08.03	103	1998	4	F5R 740	**CL116**	1			
2.0 i	03.99 - 08.03	80	1998	4	F3R 791/F3R 796	**CL123**	2			PIN / twin coil
						CL124	2			SAE / twin coil
Megane I Classic (LA0/1_)										
1.4	09.96 - 02.99	55	1390	4	E7J 764	**CL118**	1			SAE / year
	02.99 - 08.03	55	1390	4	E7J 626	**CL116**	1			PIN / year
1.4 16V	03.99 - 08.03	70	1390	4	K4J 714/K4J 750	**CL100**	4			pencil
1.6 16V	03.99 - 08.03	79	1598	4	K4M 700/K4M 708/K4M 701	**CL100**	4			pencil
1.6 e	09.96 - 03.97	66	1598	4	K7M 702/K7M 703/K7M 790	**CL101**	1			year / for cyl 2-3 (with CL103)
						CL103	1			year / for cyl 1-4 (with CL101)
1.6 e	04.97 - 03.99	66	1598	4	K7M 702/K7M 703/K7M 790	**CL102**	1			year / for cyl 2-3 (with CL128)
						CL128	1			year / for cyl 1-4 (with CL102)
						CL116	1			year / coil for cyl 1-4-2-3
1.6 i	09.96 - 03.97	55	1598	4	K7M 720	**CL101**	1			year / for cyl 2-3 (with CL103)
	09.96 - 03.97	55	1598	4	K7M 720	**CL103**	1			year / for cyl 1-4 (with CL101)
	03.97 - 03.99	55	1598	4	K7M 720	**CL116**	1			year / coil for cyl 1-4-2-3
1.8 16V	01.01 - 08.03	85	1783	4	F4P 722/F4P 720	**CL100**	4			pencil
2.0 i	03.99 - 08.03	80	1998	4	F3R 791/F3R 751/F3R _	**CL123**	2			PIN / twin coil
						CL124	2			SAE / twin coil
2.0 i	04.97 - 08.03	84	1998	4	F3R 791/F3R 751/F3R _	**CL123**	2			PIN / twin coil
						CL124	2			SAE / twin coil
Megane I Coach (DA0/1_)										
1.4 16V	03.99 - 08.03	70	1390	4	K4J 714/K4J 750	**CL100**	4			pencil
1.6 16V	03.99 - 08.03	79	1598	4	K4M 700/K4M 708/K4M 701	**CL100**	4			pencil
1.6 e	03.96 - 03.97	66	1598	4	K7M 702/K7M 703	**CL101**	1			year / for cyl 2-3 (with CL103)
						CL103	1			year / for cyl 1-4 (with CL101)
1.6 e	03.97 - 03.99	66	1598	4	K7M 702/K7M 703	**CL102**	1			year / for cyl 2-3 (with CL128)
						CL128	1			year / for cyl 1-4 (with CL102)
						CL116	1			year / coil for cyl 1-4-2-3
2.0 16V	01.02 - 08.03	102	1998	4	F4R 746	**CL100**	4			pencil
2.0 16V	03.96 - 11.99	108	1998	4	F7R 710/F7R 714	**CL131**	1			
2.0 16V IDE	11.99 - 08.03	103	1998	4	F5R 740	**CL116**	1			
2.0 i	03.99 - 08.03	80	1998	4	F3R 791/F3R 796	**CL123**	2			PIN / twin coil
						CL124	2			SAE / twin coil
2.0 i	03.96 - 04.97	84	1998	4	F3R 751/F3R 750	**CL124**	2			SAE / year / twin coil
	04.97 - 08.03	84	1998	4	F3R 751/F3R 750	**CL123**	2			PIN / year / twin coil
Megane I Grandtour (KA0/1_)										
1.4 16V	03.99 - 08.03	70	1390	4	K4J 714/K4J 750	**CL100**	4			pencil
1.4 e	03.99 - 08.03	55	1390	4	E7J 626	**CL116**	1			
1.6 16V	03.99 - 08.03	79	1598	4	K4M 704/K4M 700/_708/_701	**CL100**	4			pencil
1.6 e	03.99 - 08.03	66	1598	4	K7M 702/K7M 703	**CL101**	1			SAE / coil for cyl 2-3
						CL103	1			SAE / coil for cyl 1-4
						CL116	1			coil 4xPIN for cyl 1-4-2-3
1.8 16V	01.01 - 08.03	85	1783	4	F4P 722/F4P 720	**CL100**	4			pencil
Megane II (BM0/1_, CM0/1_)										
1.4 16V	10.03 - 02.08	60	1390	4	K4J 732	**CL100**	4			pencil
1.4 16V	11.02 - 02.08	72	1390	4	K4J 740/K4J 730	**CL100**	4			pencil
1.6	06.05 - 02.08	77	1598	4	K4M 788	**CL100**	4			pencil
1.6 16V	01.06 - 06.08	82	1598	4	K4M 812/K4M 760/K4M 813	**CL100**	4			pencil
1.6 16V	11.02 - 02.08	83	1598	4	K4M 760	**CL100**	4			pencil
1.6 Flex-Fuel	01.07 - 02.08	77	1598	4	K4M 788	**CL100**	4			pencil
2.0	08.06 - 02.08	169	1998	4	F4R 774	**CL100**	4			pencil
2.0 16V	11.02 - 02.08	99	1998	4	F4R 770	**CL100**	4			pencil
2.0 16V Turbo	05.04 - 02.08	120	1998	4	F4R 776	**CL100**	4			pencil
2.0 Renault Sport	05.04 - 10.09	165	1998	4	F4R 774/F4Rt 774	**CL100**	4			pencil
Megane II Combi (KM0/1_)										
1.4	08.03 - 07.09	72	1390	4	K4J 740/K4J 730	**CL100**	4			pencil
1.6	08.03 - 07.09	83	1598	4	K4M 760/K4M 761	**CL100**	4			pencil
1.6 16V	01.06 - 08.09	82	1598	4	K4M 812/K4M 760/_761/_813	**CL100**	4			pencil
1.6 16V Hi-Flex	02.08 - 07.09	77	1598	4	K4M 856	**CL100**	4			pencil
2.0	08.03 - 07.09	99	1998	4	F4R 771/F4R 770	**CL100**	4			pencil
Megane II Coupe-Cabriolet (EM0/1_)										
1.6	09.03 - 03.09	83	1598	4	K4M 760/K4M 761	**CL100**	4			pencil
1.6 16V	01.06 - 06.08	82	1598	4	K4M 812/K4M 760/_761/_813	**CL100**	4			pencil
2.0	09.03 - 12.09	99	1998	4	F4R 771/F4R 770	**CL100**	4			pencil
2.0 16V Turbo	05.04 - 03.09	120	1998	4	F4R 776	**CL100**	4			pencil

model	year	kW	cm³	cyl	engine	coil	pcs	boot	pcs	info
RENAULT										
Megane II Sedan (LM0/1_)										
1.4	09.03 -	60	1390	4	K4J 732	**CL100**	4			pencil
1.4	09.03 -	72	1390	4	K4J 740/K4J 730	**CL100**	4			pencil
1.6	05.05 -	77	1598	4	K4M 762	**CL100**	4			pencil
1.6	09.03 -	83	1598	4	K4M 760/K4M 761	**CL100**	4			pencil
1.6 16V	01.06 -	82	1598	4	K4M 812/K4M 813	**CL100**	4			pencil
2.0	09.03 -	99	1998	4	F4R 771/F4R 770	**CL100**	4			pencil
Megane III CC (BZ0_)										
1.2 TCe	03.12 -	85	1198	4	H5F 400	**CL155**	4			pencil
1.2 TCe	01.13 -	97	1197	4	H5F 404	**CL155**	4			pencil
1.4 TCe	04.09 -	96	1397	4	H4J 700	**CL152**	4			pencil
1.6 16V	11.08 -	74	1598	4	K4M 848	**CL100**	4			pencil
1.6 16V	11.08 -	81	1598	4	K4M 858	**CL100**	4			pencil
1.6 16V BiFuel	11.08 -	81	1598	4	K4M 866	**CL100**	4			pencil
2.0 CVT	02.09 -	103	1997	4	M4R 713/M4R 711	**CL153**	4	CP050	4	pencil
2.0 TCe	11.08 -	132	1998	4	F4R 870	**CL100**	4			pencil
Megane III Coupe (DZ0/1_)										
1.2 TCe	03.12 -	85	1198	4	H5F 400	**CL155**	4			pencil
1.2 TCe	01.13 -	97	1197	4	H5F 404	**CL155**	4			pencil
1.4 TCe	04.09 -	96	1397	4	H4J 700	**CL152**	4			pencil
1.6 16V	11.08 -	74	1598	4	K4M 848	**CL100**	4			pencil
1.6 16V	11.08 -	81	1598	4	K4M 858	**CL100**	4			pencil
1.6 16V BiFuel	11.08 -	81	1598	4	K4M 866	**CL100**	4			pencil
2.0 CVT	05.09 -	103	1997	4	M4R 711	**CL153**	4	CP050	4	pencil
2.0 TCe	11.08 -	132	1998	4	F4R 870	**CL100**	4			pencil
2.0 TCe	05.09 -	184	1998	4	F4R 874	**CL100**	4			pencil
Megane III Grandtour (KZ0/1)										
1.2 TCe	03.12 -	85	1198	4	H5F 400	**CL155**	4			pencil
1.2 TCe	01.13 -	97	1197	4	H5F 404	**CL155**	4			pencil
1.4 TCe	05.09 -	96	1397	4	H4J 700	**CL152**	4			pencil
1.6 16V	05.09 -	74	1598	4	K4M 848	**CL100**	4			pencil
1.6 16V	05.09 -	81	1598	4	K4M 858	**CL100**	4			pencil
1.6 16V BiFuel	11.08 -	81	1598	4	K4M 866	**CL100**	4			pencil
2.0 CVT	05.09 -	103	1997	4	M4R 711/M4R F 713	**CL153**	4	CP050	4	pencil
2.0 TCe	11.08 -	132	1998	4	F4R 870/F4R 872	**CL100**	4			pencil
Megane Scenic (JA0/1_)										
1.4 i	01.97 - 09.99	55	1390	4	E7J 764	**CL118**	1			
1.6 16V	04.98 - 10.99	79	1598	4	K4M 704/K4M 700/_ 708/_ 701	**CL100**	4			pencil
1.6 e	10.96 - 03.97	66	1598	4	K7M 702/K7M 703	**CL101**	1			year / for cyl 2-3 (with CL103)
						CL103	1			year / for cyl 1-4 (with CL101)
1.6 e	04.97 - 10.99	66	1598	4	K7M 702/K7M 703	**CL102**	1			year / for cyl 2-3 (with CL128)
						CL128	1			year / for cyl 1-4 (with CL102)
						CL116	1			year / coil for cyl 1-4-2-3
1.6 i	01.97 - 03.97	55	1598	4	K7M 720	**CL101**	1			year / for cyl 2-3 (with CL103)
			1598	4	K7M 720	**CL103**	1			year / for cyl 1-4 (with CL101)
1.6 i	04.97 - 09.99	55	1598	4	K7M 720	**CL102**	1			year / for cyl 2-3 (with CL128)
						CL128	1			year / for cyl 1-4 (with CL102)
						CL116	1			year / coil for cyl 1-4-2-3
2.0 i	01.99 - 09.99	80	1998	4	F3R 796	**CL123**	2			PIN / twin coil
						CL124	2			SAE / twin coil
2.0 i	01.97 - 04.97	84	1998	4	F3R 751/F3R 750	**CL124**	2			SAE / year / twin coil
	04.97 - 09.99	84	1998	4	F3R 751/F3R 750	**CL123**	2			PIN / year / twin coil
2.0 RXE 4x4	05.97 - 10.99	84	1998	4	F3R 750	**CL123**	2			PIN / twin coil
						CL124	2			SAE / twin coil
Modus / Grand Modus (F/JP0_)										
1.2	05.05 -	48	1149	4	D4F 740	**CL134**	1			coil with ignition cables
1.2	12.04 -	55	1149	4	D4F 740	**CL134**	1			coil with ignition cables / year
	01.08 -	55	1149	4	D4F 740	**CL149**	1			coil with ignition cables / year
	01.09 -	55	1149	4	D4F 740	**CL150**	1			coil without ignition cables / year
1.2	12.04 -	58	1149	4	D4F 764	**CL134**	1			coil with ignition cables / year
	01.09 -	58	1149	4	D4F 764	**CL150**	1			coil without ignition cables / year
1.2	04.11 -	76	1149	4	D4F 786	**CL116**	1			
1.2 16V	05.07 -	74	1149	4	D4F 784	**CL116**	1			
1.2 16V Hi-Flex	10.08 -	55	1149	4	D4F 740	**CL149**	1			coil with ignition cables
						CL150	1			coil without ignition cables
1.4	12.04 -	72	1390	4	K4J 780/K4J 770	**CL100**	4			pencil
1.6	12.04 -	65	1598	4	K4M 794	**CL100**	4			pencil
1.6	12.04 -	82	1598	4	K4M 790/K4M 800/_ 801/_ 791	**CL100**	4			pencil
Rapid Van (F40_, G40_)										
1.2	09.91 - 03.98	40	1239	4	C3G 712/C3G 710	**CL122**	1			
1.4	07.85 - 08.91	43	1397	4	C1J 780/C1J 768	**CL118**	1			
1.4	03.86 - 08.91	44	1397	4	C2J 784	**CL118**	1			

RENAULT Rapid Van (F40_, G4_) ▶

model	year	kW	cm³	cyl	engine	coil	pcs	boot	pcs	info
RENAULT										
Rapid Van (F40_, G40_)										
1.4	09.91 - 03.98	55	1390	4	E7J 720/E7J 724	**CL118**	1			
1.4	01.94 - 03.98	58	1390	4	E7J 728	**CL118**	1			
1.4 cat	08.88 - 03.98	43	1397	4	C3J 762/C3J 700/_ 702/_ 760	**CL118**	1			
Safrane I (B54_)										
2.0	11.92 - 07.96	77	1995	4	J7R 732/J7R 733	**CL118**	1			
2.0 12V	04.92 - 07.96	97	1995	4	J7R 735/J7R 734	**CL118**	1			
2.2	04.92 - 07.96	79	2165	4	J7T 762	**CL118**	1			
2.2	04.92 - 07.96	101	2165	4	J7T 760/J7T 761	**CL118**	1			
3.0 Biturbo 4x4	02.93 - 07.96	193	2963	6	Z7X 726	**CL118**	1			
3.0 V6	12.92 - 07.96	123	2963	6	Z7X 721/Z7X 723/_ 753/_ 722	**CL118**	1			
3.0 V6 4x4	12.92 - 07.96	123	2963	6	Z7X 721/Z7X 723/Z7X 722	**CL118**	1			
Safrane II (B54_)										
2.0 16V	07.96 - 12.00	100	1948	4	N7Q 710/N7Q 711	**CL136**	1			twin coil for cyl 2-3
						CL137	1			twin coil for cyl 1-4
2.5 20V	07.96 - 12.00	121	2435	5	N7U 700/N7U 701	**CL119**	1			
2.9 24V	03.99 - 12.00	140	2946	6	L7X 713	**CL140**	1			rail coil for 3 cylinders
3.0 V6	07.96 - 12.00	123	2963	6	Z7X 755	**CL118**	1			
Sandero/Stepway I										
1.4	02.09 -	55	1390	4	K7J 710	**CL116**	1			
1.6	11.10 -	62	1598	4	K7M 718	**CL116**	1			
1.6	02.09 -	64	1598	4	K7M 710	**CL116**	4			pencil
1.6	12.07 -	75	1598	4	K7M 710	**CL116**	1			
1.6	12.07 -	76	1598	4		**CL100**	4			pencil
Scénic I (JA0/1_)										
1.4 16V	09.99 - 08.03	70	1390	4	K4J 714/K4J 750	**CL100**	4			pencil
1.8 16V	01.01 - 08.03	85	1783	4	F4P 722/F4P 720	**CL100**	4			pencil
2.0 16V	07.00 - 08.03	102	1998	4	F4R 741/F4R 740/F4R 746	**CL100**	4			pencil
2.0 16V	09.99 - 08.03	103	1998	4	F4R 741/F4R 740/_ 744/_ 747	**CL100**	4			pencil
2.0 16V RX4	06.00 - 08.03	102	1998	4	F4R 746/F4R 744	**CL100**	4			pencil
Scénic II (JM0/1_)										
1.4	06.03 -	72	1390	4	K4J 740/K4J 730/K4J 770	**CL100**	4			pencil
1.6	06.03 -	83	1598	4	K4M 761/K4M 782	**CL100**	4			pencil
1.6 16V	10.05 -	82	1598	4	K4M 812/K4M 766/K4M 813	**CL100**	4			pencil
2.0	06.03 -	99	1998	4	F4R 771/F4R 770	**CL100**	4			pencil
2.0 16V Turbo	05.04 -	120	1998	4	F4R 776	**CL100**	4			pencil
Scénic III (JZ0/1_)										
1.2 TCe	04.12 -	85	1197	4	H5F 400	**CL155**	4			pencil
1.2 TCe	01.13 -	97	1197	4	H5F 404	**CL155**	4			pencil
1.4 16V	02.09 -	96	1397	4	H4J 700	**CL152**	4			pencil
1.6 16V	02.09 -	81	1598	4	K4M 858	**CL100**	4			pencil
1.6 E85	02.09 -	81	1598	4	K4M 866	**CL100**	4			pencil
2.0 16V	02.09 -	103	1997	4	M4R 711/M4R 710	**CL153**	4	CP050	4	pencil
Super 5 (B/C40_)										
1.4	10.84 - 06.88	43	1397	4	C1J 780/C1J 768	**CL118**	1			
1.4	06.87 - 08.90	44	1397	4	C2J 784	**CL118**	1			
1.4	06.87 - 07.89	49	1397	4	C2J 782	**CL118**	1			
1.4	10.84 - 07.89	52	1397	4	C2J 789/C2J 700/C2J 780	**CL118**	1			
1.4 cat	10.85 - 12.96	43	1397	4	C3J 700/C3J 702/C3J 760	**CL118**	1			
1.4 Turbo	04.85 - 08.90	88	1397	4	C1J 784/C1J 782/C1J 788	**CL118**	1			
1.7	10.86 - 03.95	54	1721	4	F3N 716 /F3N 717	**CL118**	1			
1.7	06.87 - 03.95	64	1721	4	F2N 742/F2N 740	**CL118**	1			
1.7 i	10.86 - 08.91	69	1721	4	F3N 722/F3N 702	**CL118**	1			
Thalia I (LB0/1/2_)										
1.2 16V	04.02 -	55	1149	4	D4F 712	**CL130**	1			coil with ignition cables
1.4	08.00 -	55	1390	4	K7J 700	**CL116**	1			
1.4 16V	08.00 -	72	1390	4	K4J 712	**CL100**	4			pencil
Thalia II (LU1/2_)										
1.4	09.08 - 06.14	55	1390	4	K7J 700	**CL116**	1			
Trafic Bus (T5, T6, T7)										
1.7	06.86 - 04.89	50	1721	4	F1N 724	**CL118**	1			
2.0	06.86 - 04.89	59	1995	4	J5R 722/J5R 716/J5R 726	**CL118**	1			
2.0 4x4	06.86 - 04.89	59	1995	4	J5R 722/J5R 716/J5R 726	**CL118**	1			
Trafic Bus (TXW)										
1.7	08.92 - 08.94	50	1721	4	F1N 724	**CL118**	1			
2.0	05.89 - 08.90	59	1995	4	J5R 726	**CL118**	1			
2.2	05.89 - 06.94	70	2165	4	J7T 780	**CL118**	1			
2.2	06.94 - 10.97	74	2165	4	J7T 600	**CL118**	1			
2.2 4x4	05.89 - 06.94	70	2165	4	J7T 780	**CL118**	1			
2.2 4x4	06.94 - 10.97	74	2165	4	J7T 600	**CL118**	1			
Trafic Flatbed (P6)										
1.7	06.86 - 04.89	50	1721	4	F1N 722	**CL118**	1			

RENAULT Trafic Flatbed (P6) ▶

model	year	kW	cm³	cyl	engine	coil	pcs	boot	pcs	info
RENAULT										
Trafic Flatbed (P6)										
2.0	03.80 - 04.89	59	1995	4	J5R 726	**CL118**	1			
2.0	03.80 - 12.86	63	1995	4	829 721/829 720	**CL146**	1			
2.0 4x4	05.85 - 02.89	60	1995	4	J5R 716	**CL146**	1			
Trafic Flatbed (PXX)										
1.7	05.89 - 08.94	50	1721	4	F1N 722	**CL118**	1			
2.0	03.89 - 12.91	60	1995	4	J5R 726	**CL118**	1			
2.0 RWD	05.89 - 10.97	59	1995	4	J5R 726	**CL118**	1			
2.2	05.89 - 06.94	70	2165	4	J7T 780	**CL118**	1			
2.2	09.94 - 04.98	74	2165	4	J7T 600	**CL118**	1			
2.2 4x4	09.94 - 04.98	74	2165	4	J7T 600	**CL118**	1			
Trafic II Bus (JL)										
2.0	03.01 -	88	1998	4	F4R 722/F4R 720	**CL100**	4			pencil
2.0 16V	08.06 -	86	1998	4	F4R 820	**CL100**	4			pencil
Trafic II Flatbed (EL)										
2.0	03.01 -	88	1998	4	F4R 720	**CL100**	4			pencil
2.0 16V	08.06 -	86	1998	4	F4R 820	**CL100**	4			pencil
Trafic II Van (FL)										
2.0	03.01 -	88	1998	4	F4R 722/F4R 720	**CL100**	4			pencil
2.0 16V	08.06 -	86	1998	4	F4R 820	**CL100**	4			pencil
Trafic Van (T1, T3, T4)										
1.7	06.86 - 04.89	50	1721	4	F1N 724	**CL118**	1			
2.0	06.86 - 04.89	59	1995	4	J5R 722/J5R 716/J5R 726	**CL118**	1			
2.0 4x4	06.86 - 04.89	59	1995	4	J5R 722/J5R 716/J5R 726	**CL118**	1			
Trafic Van (TXX)										
1.7	08.92 - 08.94	50	1721	4	F1N 720	**CL118**	1			
2.0	05.89 - 08.90	59	1995	4	J5R 716	**CL118**	1			
2.2	05.89 - 06.94	70	2165	4	J7T 780	**CL118**	1			
2.2	06.94 - 10.97	74	2165	4	J7T 600	**CL118**	1			
2.2 4x4	05.89 - 06.94	70	2165	4	J7T 780	**CL118**	1			
2.2 4x4	06.94 - 10.97	74	2165	4	J7T 600	**CL118**	1			
Twingo I (C06_)										
1.2	05.96 - 10.98	40	1149	4	D7F 700/D7F 701	**CL131**	1			year
	11.98 -	40	1149	4	D7F 700/D7F 701	**CL116**	1			year
1.2	03.93 - 10.96	40	1239	4	C3G 702/C3G 700	**CL122**	1			
1.2	05.96 - 10.98	43	1149	4	D7F 700/_702/_704/_701/_703	**CL131**	1			year
	11.98 - 06.07	43	1149	4	D7F 700/_702/_704/_701/_703	**CL116**	1			year
1.2 16V	08.04 - 06.07	44	1149	4	D4F 708	**CL149**	1			coil with ignition cables
						CL150	1			coil without ignition cables
1.2 16V	01.01 -	55	1149	4	D4F 702	**CL130**	1			coil with ignition cables
						CL150	1			coil without ignition cables
Twingo I Van (S06_)										
1.2	03.93 - 05.96	40	1239	4	C3G 702/C3G 700	**CL122**	1			
1.2	05.96 -	43	1149	4	D7F 706/D7F 701	**CL131**	1			
Twingo II (CN0_)										
1.2	03.07 -	43	1149	4	D7F 800	**CL116**	1			
1.2 16V	03.07 -	56	1149	4	D4F 772	**CL149**	1			coil with ignition cables
						CL150	1			coil without ignition cables
1.2 Turbo	03.07 -	74	1149	4	D4F 780/D4F 782	**CL116**	1			
1.6 RS	05.08 -	98	1598	4	K4M 854	**CL100**	4			pencil
Twingo III										
0.9 TCe 90	09.14 -	66	898	3	H4B 401	**CL155**	3			pencil
1.0 SCe 70	09.14 -	52	999	3	H4D 400	**CL155**	3			pencil
Vel Satis (BJ0_)										
2.0 16V Turbo	06.02 -	120	1998	4	F4R 762/F4R 763	**CL100**	4			pencil
2.0 16 V Turbo	04.04 -	125	1998	4	F4R 766/F4R 767	**CL100**	4			pencil
3.5 V6	06.02 -	177	3498	6	V4Y 701/V4Y 711	**CL100**	6			pencil
Wind (E4M_)										
1.6	07.10 -	98	1598	4	K4M 854	**CL100**	4			pencil
ROVER										
100 / Metro (XP)										
111 C/L/S	03.90 - 12.98	44	1119	4	11 K2D/11 K2A	**CL700**	1			
114 S/L/GTA	03.90 - 12.98	55	1396	4	14 K2D/14 K2A	**CL700**	1			
100 Cabriolet (XP)										
111	04.94 - 10.97	44	1119	4	11 K2D	**CL700**	1			
114	04.94 - 10.97	55	1396	4	14 K2D/14 K2A	**CL700**	1			
200 (RF)										
211	01.98 - 03.00	44	1119	4	11 K2D	**CL700**	1			
214 i	11.95 - 03.00	55	1396	4	14 K2F	**CL700**	1			
214 Si	11.95 - 03.00	76	1396	4	14 K4F	**CL700**	1			with distributor
						CL711	2			semidirect / pencil

ROVER 200 (RF) ▶

model	year	kW	cm³	cyl	engine	coil	pcs	boot	pcs	info
ROVER										
200 (RF)										
216 Si	11.95 - 03.00	82	1588	4	16 K4F	**CL700**	1			with distributor
						CL711	2			semidirect / pencil
218 K Vi	11.95 - 03.00	107	1796	4	18 K4K	**CL708**	2			semidirect / pencil
200 Coupe (XW)										
216	10.92 - 06.99	90	1590	4	D 16 A8	**CL500**	1			
200 Hatchback (XW)										
216 GSi	10.89 - 10.95	82	1590	4	D 16 Z2	**CL500**	1			
216 GTi	09.90 - 10.95	90	1590	4	D 16 A8	**CL500**	1			
25 (RF)										
1.4 16V	10.99 - 05.05	62	1396	4	14 K4M	**CL700**	1			with distributor
						CL711	2			semidirect / pencil
1.4 16V	10.99 - 05.05	76	1396	4	14 K4F	**CL700**	1			with distributor
						CL711	2			semidirect / pencil
1.6 16V	10.99 - 05.05	80	1588	4	16 K4F	**CL700**	1			with distributor
						CL711	2			semidirect / pencil
1.8 16V	10.99 - 05.05	85	1796	4	18 K4F	**CL700**	1			with distributor
						CL708	2			semidirect / pencil
1.8 16V	02.00 - 05.05	107	1796	4	18 K4K	**CL708**	2			semidirect / pencil
400 (RT)										
414 Si	05.95 - 03.00	76	1396	4	14 K4F	**CL700**	1			
416 Si	05.95 - 03.00	82	1588	4	16 K4F	**CL700**	1			
416 Si	05.95 - 03.00	83	1590	4	D 16 Y2	**CL569**	1			with distributor / built in
						CL700	1			with distributor / SAE
420 Si Lux	12.95 - 03.00	100	1994	4	20 T4H	**CL106**	1			
400 (XW)										
416 GSI	04.90 - 04.95	82	1590	4	D 16 Z2	**CL500**	1			
416 GTI	04.90 - 04.95	90	1590	4	D 16 A8	**CL500**	1			
400 Hatchback (RT)										
414	03.96 - 12.97	55	1396	4	14 K2F	**CL700**	1			
414 Si	05.95 - 03.00	76	1396	4	14 K4F	**CL700**	1			
416 Si	05.95 - 03.00	82	1588	4	16 K4F	**CL700**	1			
416 Si	06.95 - 03.00	83	1590	4	D 16 Y2	**CL569**	1			with distributor / built in
						CL700	1			with distributor / SAE
420 Si Lux	12.95 - 03.00	100	1994	4	20 T4H	**CL106**	1			
400 Tourer (XW)										
1.6 i	05.94 - 11.98	82	1590	4	D 16 Z2	**CL700**	1			
1.6 i	05.94 - 11.98	90	1590	4	D 16 A8	**CL569**	1			with distributor / built in
						CL700	1			with distributor / SAE
1.8 i	06.96 - 11.98	107	1796	4	18 K4K	**CL708**	2			semidirect / pencil
2.0 i	05.94 - 11.98	100	1994	4	20 T4H	**CL106**	1			
45 (RT)										
1.4	02.00 - 05.05	76	1396	4	14 K4F	**CL711**	2			semidirect / pencil
1.6	02.00 - 05.05	80	1588	4	16 K4F	**CL711**	2			semidirect / pencil
1.8	02.00 - 05.05	86	1796	4	18 K4F	**CL708**	2			semidirect / pencil
2.0 V6	02.00 - 05.05	110	1997	6	20 K4F	**CL600**	6	CP003	6	pencil
						CL711	3			semidirect / pencil
								CP008	6	for different pencil - OEM No. GCL306
45 Sedan (RT)										
1.4	02.00 - 05.05	76	1396	4	14 K4F	**CL711**	2			semidirect / pencil
1.6	02.00 - 05.05	80	1588	4	16 K4F	**CL711**	2			semidirect / pencil
1.8	02.00 - 05.05	86	1796	4	18 K4F	**CL708**	2			semidirect / pencil
2.0 V6	02.00 - 05.05	110	1997	6	20 K4F	**CL600**	6	CP003	6	pencil
						CL711	3			semidirect / pencil
								CP008	6	for different pencil - OEM No. GCL306
600 (RH)										
618 i/Si	03.96 - 02.99	85	1850	4	F 18 A3	**CL569**	1			
620 i	08.93 - 06.96	85	1997	4	F 20 Z2	**CL501**	1			
620 Si	08.93 - 02.99	96	1997	4	F 20 Z1	**CL501**	1			
620 Ti Vitesse	07.94 - 02.99	147	1994	4	20 T4G	**CL501**	1			
623 Si	08.93 - 02.99	116	2259	4	H 23 A3	**CL501**	1			
75 (RJ)										
1.8	02.99 - 05.05	88	1796	4	K 1.8	**CL711**	2			semidirect / pencil
1.8 Turbo	05.03 - 05.05	110	1796	4	18 K4G	**CL711**	2			semidirect / pencil
2.0 V6	02.99 - 03.03	110	1997	6	20 K4F	**CL600**	6	CP003	6	year / pencil
	04.03 - 05.05	110	1997	6	20 K4F	**CL702**	6			year / pencil
2.5 V6	02.99 - 03.99	129	2497	6	KV 6	**CL600**	6	CP003	6	year / pencil
	04.99 - 10.01	129	2497	6	KV 6	**CL702**	6			year / pencil
2.5 V6	10.01 - 03.03	130	2497	6	25 K4F	**CL600**	6	CP003	6	year / pencil
	04.03 - 05.05	130	2497	6	25 K4F	**CL702**	6			year / pencil
75 Tourer (RJ)										
1.8	08.01 - 05.05	88	1796	4	K 1.8	**CL711**	2			semidirect / pencil

ROVER 75 Tourer (RJ) ▶

model	year	kW	cm³	cyl	engine	coil	pcs	boot	pcs	info
ROVER										
75 Tourer (RJ)										
1.8 Turbo	05.03 - 05.05	110	1796	4	18 K4G	**CL711**	2			semidirect / pencil
2.0 V6	08.01 - 05.05	110	1997	6	20 K4F	**CL702**	6			pencil
2.5 V6	08.01 - 03.03	130	2497	6	KV 6	**CL600**	6	CP003	6	year / pencil
	04.03 - 05.05	130	2497	6	KV 6	**CL702**	6			year / pencil
800 (XS)										
820 I/SI	01.92 - 02.99	100	1996	4	20 T4H	**CL106**	1			
827 SI/Sterling (XS)	02.88 - 12.91	130	2675	6	C 27 A2	**CL716**	1			
827 SI/Sterling (XS) cat	02.88 - 02.99	124	2675	6	C 27 A1	**CL716**	1			
800 Coupe										
827 24V (RS)	08.92 - 02.99	124	2675	6	C 27 A1	**CL716**	1			
800 Hatchback (XS)										
820 I/SI (XS)	01.93 - 02.99	100	1996	4	20 T4H	**CL106**	1			
827 24V I/SI (RS) cat	01.92 - 02.99	124	2675	6	C 27 A1	**CL716**	1			
827 Vitesse (XS) cat	10.88 - 12.91	124	2675	6	C 27 A1	**CL716**	1			
827 Vitesse/SLI	10.88 - 12.91	130	2675	6	C 27 A2	**CL716**	1			
Cabriolet (XW)										
214 1.4i 16V	01.93 - 11.99	76	1396	4	14 K4F	**CL711**	2			semidirect / pencil
216 1.6i	01.92 - 11.99	90	1590	4	D 16 A8	**CL500**	1			
216 1.6i 16V	01.96 - 11.99	82	1588	4	16 K4F	**CL700**	1			
Coupe										
1.6 16 V	03.96 - 11.99	82	1588	4	16 K4F	**CL700**	1			
Mini										
1300	01.92 - 09.96	46	1275	4	12 A2E/12 A2L	**CL106**	1			
SAAB										
900 II										
2.0 -16 Turbo	07.93 - 02.98	136	1985	4	B204L	**CL710**	1			rail coil
2.0 i	08.94 - 02.98	96	1985	4	B204I	**CL208**	1			with distributor
						CL710	1			rail coil
2.3 -16	07.93 - 02.98	110	2290	4	B234I	**CL208**	1			
2.5 -24 V6	07.93 - 02.98	125	2498	6	B258I	**CL210**	1			
900 II Cabriolet										
2.0 -16 Turbo	12.93 - 02.98	136	1985	4	B204L	**CL710**	1			rail coil
2.0 i	12.93 - 02.98	96	1985	4	B204I	**CL208**	1			with distributor
						CL710	1			rail coil
2.3 -16	12.93 - 02.98	110	2290	4	B234I	**CL208**	1			
2.5 -24 V6	12.93 - 02.98	125	2498	6	B258I	**CL210**	1			
900 II Coupe										
2.0 -16 Turbo	12.93 - 02.98	136	1985	4	B204L	**CL710**	1			rail coil
2.0 i	08.94 - 02.98	96	1985	4	B204I	**CL208**	1			with distributor
						CL710	1			rail coil
2.0 i	12.93 - 07.94	98	1985	4	B206I	**CL208**	1			with distributor
						CL710	1			rail coil
2.3 -16	12.93 - 02.98	110	2290	4	B234I	**CL208**	1			
2.5 -24 V6	12.93 - 02.98	125	2498	6	B258I	**CL210**	1			
9000										
2.0 -16	01.89 - 01.93	94	1985	4	B202I	**CL710**	1			rail coil
2.0 -16 CD	09.93 - 12.98	96	1985	4	B202I/B204I	**CL710**	1			rail coil
2.0 -16 CD	09.93 - 12.98	110	1985	4	B204S/B204E/B202S	**CL710**	1			rail coil
2.0 -16 Turbo	05.88 - 08.93	118	1985	4	B202XL	**CL710**	1			rail coil
2.0 -16 Turbo	04.85 - 12.91	129	1985	4	B202XL	**CL710**	1			rail coil
2.0 -16 Turbo CD	09.92 - 12.98	108	1985	4	B204E/B202S	**CL710**	1			rail coil
2.0 -16 Turbo CD	09.88 - 08.93	120	1985	4	B202XL	**CL710**	1			rail coil
2.0 -16 Turbo CD	09.89 - 12.98	136	1985	4	B202L	**CL710**	1			rail coil
2.3 -16 CD	08.89 - 12.98	107	2290	4	B234I	**CL710**	1			rail coil
2.3 -16 CD Turbo	07.90 - 12.98	147	2290	4	B234L	**CL710**	1			rail coil
2.3 -16 CDE	09.93 - 12.98	108	2290	4	B234I	**CL710**	1			rail coil
2.3 -16 CDE Eco-Power	09.93 - 12.98	125	2290	4	B234E	**CL710**	1			rail coil
2.3 -16 Turbo	09.90 - 08.93	143	2290	4	B234L	**CL710**	1			rail coil
3.0 -24 V6 CD/CDE	07.94 - 12.98	155	2962	6	B308I	**CL210**	1			
9000 CC										
2.0 -16	12.85 - 12.88	92	1985	4	B202XI	**CL710**	1			rail coil
2.0 -16	12.85 - 08.88	94	1985	4	B202XI	**CL710**	1			rail coil
2.0 -16 CS	01.89 - 12.98	94	1985	4	B202I	**CL710**	1			rail coil
2.0 -16 CS	09.93 - 12.98	96	1985	4	B204I	**CL710**	1			rail coil
2.0 -16 ND Turbo	09.93 - 12.98	110	1985	4	B204S/B204E/B202S	**CL710**	1			rail coil
2.0 -16 Turbo	09.84 - 08.93	118	1985	4	B202XL	**CL710**	1			rail coil
2.0 -16 Turbo	05.88 - 08.93	120	1985	4	B202XL	**CL710**	1			rail coil
2.0 -16 Turbo	09.84 - 12.91	129	1985	4	B202XL/B202L	**CL710**	1			rail coil
2.0 -16 Turbo CS	09.88 - 12.98	136	1985	4	B202L	**CL710**	1			rail coil
2.3 -16 Aero CS	02.93 - 12.98	162	2290	4	B234R	**CL710**	1			rail coil
2.3 -16 Aero CS	02.93 - 12.98	165	2290	4	B234R	**CL710**	1			rail coil

SAAB 9000 CC ▶

model	year	kW	cm³	cyl	engine	coil	pcs	boot	pcs	info
SAAB										
9000 CC										
2.3 -16 CS	09.89 - 12.98	107	2290	4	B234I	**CL710**	1			rail coil
2.3 -16 CSE	09.93 - 12.98	108	2290	4	B234I	**CL710**	1			rail coil
2.3 -16 CSE Eco Power	09.93 - 12.98	125	2290	4	B234E	**CL710**	1			rail coil
2.3 -16 Turbo	09.90 - 12.98	143	2290	4	B234L	**CL710**	1			rail coil
2.3 -16 Turbo CSE	09.93 - 12.98	147	2290	4	B234L	**CL710**	1			rail coil
3.0 -24 V6 CS/CSE	07.94 - 12.98	155	2962	6	B308I	**CL210**	1			
9-3 (YS3D)										
2.0 i	02.98 - 09.02	96	1985	4	B204I	**CL208**	1			with distributor
						CL705	1			rail coil
2.0 SE Turbo	02.98 - 09.02	147	1985	4	B204R	**CL208**	1			with distributor
						CL705	1			rail coil
2.0 Turbo	01.01 - 09.02	110	1985	4	B205E	**CL705**	1			rail coil
2.0 Turbo	10.98 - 09.02	113	1985	4	B204E	**CL208**	1			with distributor
						CL705	1			1st rail coil type
						CL710	1			2nd rail coil type
2.0 Turbo	02.98 - 09.02	136	1985	4	B205L/B204L	**CL710**	1			rail coil
2.0 Turbo	10.99 - 09.02	151	1985	4	B205R	**CL710**	1			rail coil
2.3 i	02.98 - 09.02	110	2290	4	B234I	**CL208**	1			with distributor
						CL705	1			1st rail coil type
						CL710	1			2nd rail coil type
2.3 Turbo	10.98 - 09.02	165	2290	4	B235R	**CL705**	1			1st rail coil type
						CL710	1			2nd rail coil type
9-3 (YS3F)										
1.8 i	01.04 -	90	1796	4	Z 18 XE	**CL203**	1	CP060	4	1st rail coil type
						CL710	1			2nd rail coil type
1.8 T	09.02 -	110	1998	4	B207E	**CL710**	1			rail coil
1.8 T BioPower	05.09 -	129	1998	4	B207L	**CL710**	1			rail coil
2.0 T	09.02 -	129	1998	4	B207L	**CL710**	1			rail coil
2.0 T	09.02 -	154	1998	4	B207R	**CL710**	1			rail coil
2.0 T	01.11 -	162	1998	4	A 20 NFT	**CL237**	4			pencil
2.0 T	05.09 -	177	1998	4	B207R	**CL710**	1			rail coil
2.0 T BioPower	01.07 -	129	1998	4	B207L	**CL710**	1			rail coil
2.0 T BioPower	05.09 -	147	1998	4	B207M	**CL710**	1			rail coil
2.0 T BioPower	09.02 -	154	1998	4	B207R	**CL235**	4			pencil
2.0 T BioPower	01.11 -	162	1998	4	A 20 NFT	**CL237**	4			pencil
2.0 T BioPower XWD	01.08 -	120	1998	4	B207H	**CL710**	1			rail coil
2.0 T BioPower XWD	01.08 -	154	1998	4	B207R	**CL235**	4			pencil
2.0 T BioPower XWD	01.08 -	162	1998	4	A 20 NFT	**CL237**	4			pencil
2.0 T XWD	01.07 -	120	1998	4	B207G	**CL710**	1			rail coil
2.0 T XWD	01.08 -	162	1998	4	A 20 NFT	**CL237**	4			pencil
2.0 Turbo XWD	01.08 -	154	1998	4	B207R	**CL235**	4			pencil
2.8 Turbo V6	03.05 -	184	2792	6	LP9	**CL239**	6	CP061	6	pencil
2.8 Turbo V6	12.07 -	188	2792	6	B284L	**CL239**	6	CP061	6	pencil
2.8 Turbo V6 XWD	05.08 -	206	2792	6	B284R	**CL239**	6	CP061	6	pencil
9-3 Cabriolet (YS3D)										
2.0 i	02.98 - 08.03	96	1985	4	B204I	**CL208**	1			with distributor
						CL705	1			rail coil
2.0 SE Turbo	02.98 - 08.03	147	1985	4	B204R	**CL208**	1			with distributor
						CL705	1			rail coil
2.0 Turbo	01.01 - 08.03	110	1985	4	B205E	**CL705**	1			rail coil
2.0 Turbo	10.98 - 08.03	113	1985	4	B204E	**CL208**	1			with distributor
						CL705	1			rail coil
2.0 Turbo	02.98 - 08.03	136	1985	4	B205L/B204L	**CL208**	1			with distributor
						CL705	1			rail coil
2.0 Turbo	10.99 - 08.03	151	1985	4	B205R	**CL208**	1			
2.3 i	02.98 - 08.03	110	2290	4	B234I	**CL208**	1			with distributor
						CL705	1			rail coil
2.3 Turbo	10.99 - 08.03	165	2290	4	B235R	**CL705**	1			rail coil
9-3 Cabriolet (YS3F)										
1.8 T	08.03 -	110	1998	4	B207E	**CL235**	4			pencil
2.0 T	01.11 -	162	1998	4	A 20 NFT	**CL237**	4			pencil
2.0 T	08.03 -	154	1998	4	B207R	**CL235**	4			pencil
2.0 T BioPower	01.11 -	162	1998	4	A 20 NFT	**CL237**	4			pencil
2.8 Turbo V6	02.06 -	184	2792	6	LP9	**CL239**	6	CP061	6	pencil
2.8 Turbo V6	12.07 -	188	2792	6	B284L	**CL239**	6	CP061	6	pencil
2.8 Turbo V6	02.09 -	203	2792	6	B284R	**CL239**	6	CP061	6	pencil
2.8 Turbo V6	02.09 -	206	2792	6	B284R	**CL239**	6	CP061	6	pencil
9-3 Combi (YS3F)										
1.8 i	03.05 -	90	1796	4	Z 18 XE	**CL203**	1	CP060	4	1st rail coil type
						CL710	1			2nd rail coil type
1.8 T 2.0	03.05 -	110	1998	4	B207E	**CL235**	4			pencil

SAAB 9-3 Combi (YS3F) ▶

model	year	kW	cm³	cyl	engine	coil	pcs	boot	pcs	info
SAAB										
9-3 Combi (YS3F)										
2.0 T	03.05 -	110	1998	4	B207E	**CL710**	1			rail coil
2.0 T	03.05 -	129	1998	4	B207L	**CL710**	1			rail coil
2.0 T	02.09 -	147	1998	4	B207M	**CL710**	1			rail coil
2.0 T	03.05 -	154	1998	4	B207R	**CL710**	1			rail coil
2.0 T	01.11 -	162	1998	4	A 20 NFT	**CL237**	4			pencil
2.0 T BioPower	01.07 -	129	1998	4	B207L	**CL710**	1			rail coil
2.0 T Bio Power	02.09 -	147	1998	4	B207M	**CL710**	1			rail coil
2.0 T Bio Power XWD	06.08 -	154	1998	4	B207R	**CL235**	4			pencil
2.0 T BioPower	01.11 -	162	1998	4	A 20 NFT	**CL237**	4			pencil
2.0 T BioPower XWD	01.11 -	162	1998	4	A 20 NFT	**CL237**	4			pencil
2.0 T XWD	06.08 -	154	1998	4	B207R	**CL235**	4			pencil
2.0 T XWD	01.11 -	162	1998	4	A 20 NFT	**CL237**	4			pencil
2.8 Turbo V6	03.05 -	184	2792	6	LP9	**CL239**	6	CP061	6	pencil
2.8 Turbo V6	12.07 -	188	2792	6	B284L	**CL239**	6	CP061	6	pencil
2.8 Turbo V6 XWD	05.08 -	206	2792	6	B284R	**CL239**	6	CP061	6	pencil
9-3X										
2.0 T BioPower XWD	01.11 -	162	1998	4	A 20 NFT	**CL237**	4			pencil
2.0 T BioPower XWD	02.09 -	154	1998	4	B207R	**CL235**	4			pencil
2.0 T XWD	02.09 -	154	1998	4	B207R	**CL235**	4			pencil
9-5 (YS3E)										
2.0 T	09.97 -	110	1985	4	B205E	**CL705**	1			rail coil
2.0 T	07.00 -	136	1985	4	B205L	**CL705**	1			rail coil
2.3 T	09.97 -	125	2290	4	B235E	**CL705**	1			rail coil
2.3 T	01.01 -	136	2290	4	B235E	**CL705**	1			rail coil
2.3 Turbo	07.03 -	162	2290	4	B235L	**CL705**	1			rail coil
2.3 Turbo	10.99 - 09.01	169	2290	4	B235R	**CL705**	1			rail coil
2.3 Turbo	09.01 -	184	2290	4	B235R	**CL705**	1			rail coil
2.3 Turbo	11.05 -	191	2290	4	B235R	**CL705**	1			rail coil
9-5 (YS3G)										
2.0 T BioPower	05.10 -	162	1998	4	A 20 NFT	**CL237**	4			pencil
2.0 T BioPower XWD	05.10 -	162	1998	4	A 20 NHT	**CL237**	4			pencil
2.0 Turbo	05.10 -	162	1998	4	A 20 NHT	**CL237**	4			pencil
2.0 Turbo XWD	05.10 -	162	1998	4	A 20 NHT	**CL237**	4			pencil
2.8 Turbo V6 XWD	05.10 - 01.12	221	2792	6	A 28 NER	**CL245**	6			pencil
9-5 Combi (YS3E)										
2.0 T	10.98 -	110	1985	4	B205E	**CL705**	1			rail coil
2.0 T	07.00 - 07.01	136	1985	4	B205L	**CL705**	1			rail coil
2.0 T	10.98 -	141	1985	4	B204R	**CL705**	1			rail coil
2.3 T	10.98 -	125	2290	4	B235E	**CL705**	1			rail coil
2.3 T	01.01 -	136	2290	4	B235E	**CL705**	1			rail coil
2.3 T BioPower	11.06 -	154	2290	4	B235R	**CL705**	1			rail coil
2.3 Turbo	07.03 -	162	2290	4	B235L	**CL705**	1			rail coil
2.3 Turbo	10.99 - 09.01	169	2290	4	B235R	**CL705**	1			rail coil
2.3 Turbo	09.01 -	184	2290	4	B235R	**CL705**	1			rail coil
2.3 Turbo	01.06 -	191	2290	4	B235R	**CL705**	1			rail coil
SEAT										
Alhambra (7V8, 7V9)										
1.8 T 20V	10.97 - 03.10	110	1781	4	AWC/AJH	**CL004**	4	CP001	4	pencil
2.0 i	04.96 - 03.10	85	1984	4	ADY	**CL001**	1			engine code
				4	ATM	**CL002**	1			engine code
2.8 V6	06.00 - 03.10	150	2792	6	AYL/AUE	**CL023**	6			pencil
2.8 V6 4motion	06.00 - 03.10	150	2792	6	AYL/AUE	**CL023**	6			pencil
Alhambra (710, 711)										
1.4 TSI	06.10 -	110	1390	4	CNWB/CTHA/CAVA	**CL003**	4			pencil
1.8 TFSI	11.12 -	118	1798	4	CDAA	**CL011**	4			pencil
2.0 TSI	11.10 -	147	1984	4	CCZA	**CL011**	4			pencil
2.0 TSI	05.15 -	162	1984	4	DEDA	**CL032**	4			pencil
Altea (5P1)										
1.2 TSI	04.10 -	77	1197	4	CBZB	**CL002**	1			
1.4 16V	05.06 -	63	1390	4	CGGB/BXW	**CL003**	4			pencil
1.4 TSI	11.07 -	92	1390	4	CAXC	**CL003**	4			pencil
1.6	03.04 -	75	1595	4	BGU/CCSA/BSF/CMXA/BSE	**CL002**	1			
1.6 LPG	09.09 -	75	1595	4	CHGA	**CL002**	1			
1.8 TFSI	01.07 -	118	1798	4	BZB/CDAA/BYT	**CL011**	4			pencil
2.0 FSI	05.04 - 03.09	110	1984	4	BLR/BLY/BVZ/BVY	**CL011**	4			pencil
2.0 TFSI	04.06 - 05.09	147	1984	4	BWA	**CL011**	4			pencil
Altea XL (5P5, 5P8)										
1.2 TSI	04.10 -	77	1197	4	CBZB	**CL002**	1			
1.4 16V	10.06 -	63	1390	4	CGGB/BXW	**CL003**	4			pencil
1.4 TSI	11.07 -	92	1390	4	CAXC	**CL003**	4			pencil
1.6	10.06 -	75	1595	4	CCSA/BSF/CMXA/BSE	**CL002**	1			

SEAT Altea XL (5P5, 5P8)

model	year	kW	cm³	cyl	engine	coil	pcs	boot	pcs	info
SEAT										
Altea XL (5P5, 5P8)										
1.6 LPG	09.09 -	75	1595	4	CHGA	**CL002**	1			
1.8 TFSI	01.07 -	118	1798	4	BZB/CDAA/BYT	**CL011**	4			pencil
2.0 FSI	10.06 - 03.09	110	1984	4	BVZ/BVY	**CL011**	4			pencil
2.0 TFSI 4x4	06.07 - 05.09	147	1984	4	BWA	**CL011**	4			pencil
2.0 TFSI 4x4	05.09 -	155	1984	4	CCZB	**CL011**	4			pencil
Arosa (6H)										
1.0	05.97 - 06.04	37	999	4	AER	**CL001**	1			engine code
				4	ANV/AUC	**CL002**	1			engine code
1.0	10.98 - 01.01	37	997	4	AHT	**CL007**	1			rail coil
1.4	05.97 - 06.04	44	1390	4	AEX	**CL001**	1			engine code
				4	ANW/AUD	**CL002**	1			engine code
1.4 16V	01.00 - 06.04	74	1390	4	AFK/AUB/AQQ	**CL002**	1			
Cordoba (6K1, 6K2)										
1.0 i	09.96 - 06.99	37	999	4	AER	**CL001**	1			
1.4	12.97 - 04.99	40	1390	4	ANX	**CL001**	1			
1.4 i	06.94 - 06.99	44	1390	4	AEX/AKV/ABD	**CL001**	1			
1.4 i 16V	09.96 - 06.99	74	1390	4	AFH	**CL001**	1			
1.6 i	05.94 - 06.99	55	1595	4	1F	**CL001**	1			
1.6 i	02.93 - 06.99	55	1598	4	ABU/ALM/AEE	**CL001**	1			
1.6 i	07.96 - 10.99	74	1595	4	AKL/AFT	**CL001**	1			
1.8 i	02.93 - 06.99	66	1781	4	ADZ/ABS	**CL001**	1			
1.8 i 16V	10.93 - 08.96	95	1781	4	ADL	**CL001**	1			coil socket with 3 pins
						CL019	1			coil socket with 6 pins
2.0 i	02.93 - 06.99	85	1984	4	2E	**CL001**	1			
2.0 i 16V	08.96 - 06.99	110	1984	4	ABF	**CL001**	1			
Cordoba (6K2)										
1.0	06.99 - 10.02	37	999	4	ANV/ALD/AUC	**CL002**	1			
1.4	06.99 - 10.02	44	1390	4	ANW/AKK/AUD	**CL002**	1			
1.4 16V	05.00 - 10.02	55	1390	4	APE/AUA	**CL002**	1			
1.4 16V	02.00 - 10.02	74	1390	4	AUB/AQQ	**CL002**	1			
1.6	06.99 - 10.02	55	1598	4	ALM	**CL001**	1			
1.6	06.99 - 10.02	74	1595	4	AKL/APF/AEH	**CL002**	1			
1.8 T 20V Cupra	07.00 - 10.02	115	1781	4	AYP/AQX	**CL005**	4			pencil
Cordoba (6L2)										
1.2	10.02 - 06.06	47	1198	3	AZQ/BME	**CL003**	3			pencil
1.2 12V	05.06 - 11.09	51	1198	3	BXV	**CL003**	3			pencil
1.4 16V	09.02 - 12.07	55	1390	4	BBY	**CL003**	4			pencil
1.4 16V	10.02 - 11.09	74	1390	4	BBZ	**CL003**	4			pencil
1.4 16V	05.06 - 11.09	63	1390	4	BXW	**CL003**	4			pencil
1.6	04.03 - 11.09	74	1598	4	BAH	**CL002**	1			
1.6 16V	11.06 - 11.09	77	1598	4	BTS	**CL003**	4			pencil
2.0	09.02 - 11.09	85	1984	4	AZL/BBX	**CL002**	1			
Cordoba Vario (6K5)										
1.4	06.99 - 12.02	44	1390	4	ANW/AKK/AUD	**CL002**	1			
1.4 16V	06.99 - 12.02	55	1390	4	APE/AUA	**CL002**	1			
1.4 i	09.96 - 06.99	44	1390	4	AEX/AKV	**CL001**	1			
1.6	06.99 - 12.02	55	1598	4	ALM	**CL001**	1			
1.6	06.99 - 12.02	74	1595	4	AKL/APF/AEH/AUR	**CL002**	1			
1.6 i	09.96 - 06.99	55	1598	4	ALM/AEE	**CL001**	1			
1.6 i	05.97 - 06.99	55	1595	4	1F	**CL001**	1			
1.6 i	09.96 - 06.99	74	1595	4	AFT	**CL001**	1			
Exeo (3R2)										
1.6	03.09 - 09.10	75	1595	4	ALZ	**CL002**	1			
1.8 T	12.08 - 05.10	110	1781	4	CFMA	**CL002**	1			
1.8 TSI	05.10 -	118	1798	4	CDHB	**CL011**	4			pencil
2.0 TFSI	03.09 -	147	1984	4	BWE	**CL011**	4			pencil
2.0 TFSI	05.10 -	155	1984	4	CDND	**CL011**	4			pencil
Exeo ST (3R5)										
1.6	06.09 - 09.10	75	1595	4	ALZ	**CL002**	1			
1.8 T	06.09 - 05.10	110	1781	4	CFMA	**CL002**	1			
1.8 TSI	09.10 -	88	1798	4	CDHA	**CL011**	4			pencil
1.8 TSI	05.10 -	118	1798	4	CDHB	**CL011**	4			pencil
2.0 TFSI	06.09 -	147	1984	4	BWE	**CL011**	4			pencil
2.0 TFSI	05.10 -	155	1984	4	CDND	**CL011**	4			pencil
Ibiza II (6K1)										
1.0	03.93 - 09.96	33	1043	4	AAU	**CL001**	1			
1.0 i	09.96 - 08.99	37	999	4	AER	**CL001**	1			
1.3 i	03.93 - 08.99	40	1272	4	2G/AAV	**CL001**	1			
1.4 i	09.93 - 08.99	44	1390	4	AEX/AKV/ABD/APQ	**CL001**	1			
1.4 i 16V	06.97 - 08.99	74	1390	4	AFH	**CL001**	1			
1.6 i	09.94 - 06.99	55	1595	4	1F	**CL001**	1			

SEAT Ibiza II (6K1) ▶

model	year	kW	cm³	cyl	engine	coil	pcs	boot	pcs	info
SEAT										
Ibiza II (6K1)										
1.6 i	03.93 - 08.99	55	1598	4	ABU/ALM/AEE	**CL001**	1			
1.6 i	04.96 - 08.99	74	1595	4	AFT	**CL001**	1			
1.8 i	03.93 - 08.99	66	1781	4	ADZ/ABS	**CL001**	1			coil socket with 3 pins
						CL019	1			coil socket with 6 pins
1.8 i 16V	11.93 - 08.96	95	1781	4	ADL	**CL001**	1			
2.0 i	03.93 - 08.99	85	1984	4	2E/AGG	**CL001**	1			
2.0 i 16V	08.96 - 08.99	110	1984	4	ABF	**CL001**	1			
Ibiza III (6K1)										
1.0	08.99 - 02.02	37	999	4	ANV/ALD/AUC	**CL002**	1			
1.4	08.99 - 02.02	44	1390	4	ANW/AKK/AUD	**CL002**	1			
1.4 16V	05.00 - 02.02	55	1390	4	APE/AUA	**CL002**	1			
1.4 16V	08.99 - 02.02	74	1390	4	AUB/AQQ	**CL002**	1			
1.6	08.99 - 02.02	55	1598	4	ALM	**CL001**	1			
1.6	08.99 - 02.02	74	1595	4	AKL/APF/AEH/AUR	**CL002**	1			
1.8 T 20V Cupra	07.00 - 02.02	115	1781	4	AYP/AQX	**CL005**	4			pencil
Ibiza IV (6L1)										
1.2	02.02 - 06.06	47	1198	3	AZQ	**CL003**	3			pencil
1.2	06.07 - 05.08	44	1198	3	BBM	**CL009**	3			pencil
1.2 12V	05.06 - 11.09	51	1198	3	BXV	**CL003**	3			pencil
1.4 16V	02.02 - 12.07	55	1390	4	BBY	**CL003**	4			pencil
1.4 16V	05.06 - 11.09	63	1390	4	BXW	**CL003**	4			pencil
1.4 16V	02.02 - 11.09	74	1390	4	AUB	**CL002**	1			coil 4xPIN / engine code
				4	BBZ	**CL003**	4			pencil / engine code
1.6	02.03 - 11.09	74	1598	4	BAH	**CL002**	1			
1.6 16V	11.06 - 11.09	77	1598	4	BTS	**CL003**	4			pencil
1.8 T Cupra R	01.04 - 02.08	132	1781	4	BBU/BLZ	**CL005**	4			pencil
1.8 T FR	12.03 - 05.08	110	1781	4	BKV/BJX	**CL005**	4			pencil
2.0	04.02 - 11.09	85	1984	4	AZL/BBX	**CL002**	1			
Ibiza V (6J5, 6P5)										
1.2	07.09 -	44	1198	3	CGPB	**CL003**	3			pencil
1.2	03.08 -	51	1198	3	CJLB/BZG/CGPA	**CL003**	3			pencil
1.2 TSI	09.10 -	77	1197	4	CBZB	**CL002**	1			
1.4	03.08 -	63	1390	4	CGGB/BXW	**CL003**	4			pencil
1.4 TSI	06.09 -	110	1390	4	CAVF/CTHF/CNUB/CTJB	**CL003**	4			pencil
1.6	05.08 -	77	1598	4	BTS	**CL003**	4			pencil
Ibiza V Sportcoupe (6J1, 6P1)										
1.2	07.09 -	44	1198	3	CGPB	**CL003**	3			pencil
1.2	07.08 -	51	1198	3	CJLB/BZG/CGPA	**CL003**	3			pencil
1.2 TSI	09.10 -	77	1197	4	CBZB	**CL002**	1			
1.4	07.08 -	63	1390	4	CGGB/BXW	**CL003**	4			pencil
1.4 TSI	06.09 -	110	1390	4	CAVF/CTHF/CNUB/CTJB	**CL003**	4			pencil
1.4 TSI Cupra	06.09 -	132	1390	4	CTJC/CAVE/CTHE	**CL003**	4			pencil
1.6	07.08 -	77	1598	4	BTS	**CL003**	4			pencil
Ibiza V ST (6J8, 6P8)										
1.0	05.15 -	55	999	3	CHYB	**CL031**	3			pencil
1.0 TSI	05.15 -	70	999	3	CHZB	**CL031**	3			pencil
1.0 TSI	05.15 -	81	999	3	CHZC	**CL031**	3			pencil
1.2	05.10 -	44	1198	3	CGPB	**CL003**	3			pencil
1.2	05.10 -	51	1198	3	CJLB/BZG/CGPA	**CL003**	3			pencil
1.2 TSI	09.12 -	63	1197	4	CBZA	**CL002**	1			
1.2 TSI	09.10 -	77	1197	4	CBZB	**CL002**	1			
1.4	03.10 -	63	1390	4	CGGB	**CL003**	4			pencil
1.4 TSI	10.13 -	103	1395	4	CPTA	**CL031**	4			pencil
1.4 TSI	02.12 -	110	1390	4	CAVF/CTHF/CNUB/CTJB	**CL003**	4			pencil
Inca (6K9)										
1.4 16V	04.00 - 06.03	55	1390	4	AUA	**CL002**	1			
1.4 i	11.95 - 06.03	44	1390	4	AEX/AKV	**CL001**	1			engine code
				4	AUD	**CL002**	1			engine code
1.6 i	11.95 - 05.98	55	1595	4	1F	**CL001**	1			
1.6 i	06.97 - 09.00	55	1598	4	ALM/AEE	**CL001**	1			
Leon (1M1)										
1.4 16V	11.99 - 06.06	55	1390	4	AHW/AXP/APE	**CL002**	1			coil 4xPIN / engine code
				4	BCA	**CL003**	4			pencil / engine code
1.6	11.99 - 06.06	74	1595	4	AKL/APF/AEH	**CL002**	1			
1.6	10.05 - 06.06	75	1595	4	BGU/BFQ	**CL002**	1			
1.6 16V	09.00 - 06.06	77	1598	4	AUS	**CL002**	1			coil 4xPIN / engine code
				4	BCB/AZD	**CL003**	4			pencil / engine code
1.8 20V	11.99 - 06.06	92	1781	4	AGN/APG	**CL002**	1			
1.8 20V T	11.99 - 06.06	132	1781	4	APP/AUQ	**CL005**	4			pencil
1.8 20V T 4	11.99 - 06.06	132	1781	4	ARY	**CL005**	4			pencil
1.8 T Cupra R	02.02 - 06.06	154	1781	4	AMK	**CL005**	4			pencil

SEAT Leon (1M1) ▶

model	year	kW	cm³	cyl	engine	coil	pcs	boot	pcs	info
SEAT										
Leon (1M1)										
1.8 T Cupra R	07.03 - 06.06	165	1781	4	BAM	**CL005**	4			pencil
2.8 Cupra 4	02.01 - 06.06	150	2792	6	AUE	**CL030**	1			
Leon (1P1)										
1.2 TSI	02.10 -	77	1197	4	CBZB	**CL002**	1			
1.4 16V	06.06 -	63	1390	4	CGGB/BXW	**CL003**	4			pencil
1.4 TSI	11.07 -	92	1390	4	CAXC	**CL003**	4			pencil
1.6	07.05 -	75	1595	4	CCSA/BSF/CMXA/BSE	**CL002**	1			
1.6 LPG	12.09 -	75	1595	4	CHGA	**CL002**	1			
1.8 TSI	06.07 -	118	1798	4	BZB/CDAA	**CL011**	4			pencil
2.0 Cupra R	09.09 -	195	1984	4	CDLA	**CL011**	4			pencil
2.0 FSI	07.05 - 05.10	110	1984	4	BLR/BLY/BVZ/BVY	**CL011**	4			pencil
2.0 TFSI	09.05 - 05.06	136	1984	4	BWA1	**CL011**	4			pencil
2.0 TFSI	05.05 - 03.09	147	1984	4	BWA	**CL011**	4			pencil
2.0 TFSI	06.09 -	155	1984	4	CCZB	**CL011**	4			pencil
2.0 TFSI	11.06 -	177	1984	4	BWJ/CDLD	**CL011**	4			pencil
Leon (5F1)										
1.2 TSI	12.12 -	63	1197	4	CJZB/CYVA	**CL031**	4			pencil
1.2 TSI	01.13 -	77	1197	4	CJZA	**CL031**	4			pencil
1.2 TSI	04.14 -	81	1197	4	CYVB	**CL031**	4			pencil
1.4 TSI	11.12 -	90	1395	4	CMBA/CXSA	**CL031**	4			pencil
1.4 TSI	05.14 -	92	1395	4	CZCA	**CL031**	4			pencil
1.4 TSI	09.12 -	103	1395	4	CHPA/CPTA	**CL031**	4			pencil
1.4 TSI	05.14 -	110	1395	4	CZEA	**CL031**	4			pencil
1.8 TSI	02.13 -	132	1798	4	CJSB/CJSA	**CL032**	4			pencil
2.0 Cupra	10.13 -	195	1984	4	CJXE	**CL032**	4			pencil
2.0 Cupra	10.13 -	206	1984	4	CJXA	**CL032**	4			pencil
Leon SC (5F5)										
1.0 TSI	05.15 -	85	999	3	CHZD	**CL031**	3			pencil
1.2 TSI	01.13 -	63	1197	4	CJZB/CYVA	**CL031**	4			pencil
1.2 TSI	02.13 -	77	1197	4	CJZA	**CL031**	4			pencil
1.2 TSI	05.14 -	81	1197	4	CYVB	**CL031**	4			pencil
1.4 TSI	02.13 -	90	1395	4	CMBA/CXSA	**CL031**	4			pencil
1.4 TSI	05.14 -	92	1395	4	CZCA	**CL031**	4			pencil
1.4 TSI	02.13 -	103	1395	4	CHPA/CPTA	**CL031**	4			pencil
1.4 TSI	05.14 -	110	1395	4	CZEA	**CL031**	4			pencil
1.8 TSI	02.13 -	132	1798	4	CJSB/CJSA	**CL032**	4			pencil
2.0 Cupra	10.13 -	195	1984	4	CJXE	**CL032**	4			pencil
2.0 Cupra	10.13 -	206	1984	4	CJXA	**CL032**	4			pencil
Leon ST (5F8)										
1.0 TSI	05.15 -	85	999	3	CHZD	**CL031**	3			pencil
1.2 TSI	11.13 -	63	1197	4	CJZB/CYVA	**CL031**	4			pencil
1.2 TSI	08.13 -	77	1197	4	CJZA	**CL031**	4			pencil
1.2 TSI	05.14 -	81	1197	4	CYVB	**CL031**	4			pencil
1.4 TGI	10.13 -	81	1395	4	CPWA	**CL031**	4			pencil
1.4 TSI	10.13 -	90	1395	4	CMBA/CXSA	**CL031**	4			pencil
1.4 TSI	05.14 -	92	1395	4	CZCA	**CL031**	4			pencil
1.4 TSI	10.13 -	103	1395	4	CHPA/CPTA	**CL031**	4			pencil
1.4 TSI	05.14 -	110	1395	4	CZEA	**CL031**	4			pencil
1.8 TSI	10.13 -	132	1798	4	CJSB/CJSA	**CL032**	4			pencil
1.8 TSI 4Drive	11.14 -	132	1798	4	CJSA	**CL032**	4			pencil
2.0 Cupra	10.13 -	195	1984	4	CJXE	**CL032**	4			pencil
2.0 Cupra	10.13 -	206	1984	4	CJXA	**CL032**	4			pencil
Mii (KF1_)										
1.0	10.11 -	44	999	3	CHYA	**CL031**	3			pencil
1.0	10.11 -	55	999	3	CHYB	**CL031**	3			pencil
1.0 EcoFuel	11.12 -	50	999	3	CPGA	**CL031**	3			pencil
Toledo I (1L)										
1.6 i	05.91 - 12.93	52	1595	4	1F	**CL001**	1			
1.6 i	05.91 - 03.99	54	1595	4	EZ/ABN/1F	**CL001**	1			
1.6 i	01.93 - 03.99	55	1595	4	1F	**CL001**	1			
1.6 i	11.96 - 03.99	74	1595	4	AFT	**CL001**	1			
1.8 16V	05.91 - 03.99	92	1781	4	PL	**CL018**	1			
1.8 16V	05.91 - 03.99	98	1781	4	KR	**CL018**	1			
1.8 i	05.91 - 12.96	65	1781	4	RP	**CL018**	1			
1.8 i	11.93 - 12.96	66	1781	4	ADZ/ABS	**CL001**	1			
2.0 i	05.91 - 03.99	85	1984	4	2E	**CL001**	1			coil socket with 3 pins
						CL019	1			coil socket with 6 pins
2.0 i 16V	11.93 - 03.99	110	1984	4	ABF	**CL001**	1			coil socket with 3 pins
						CL019	1			coil socket with 6 pins
Toledo II (1M2)										
1.4 16V	01.00 - 05.02	55	1390	4	AHW/AXP/BCA/APE/AUA	**CL002**	1			

SEAT Toledo II (1M2) ▶

model	year	kW	cm³	cyl	engine	coil	pcs	boot	pcs	info
SEAT										
Toledo II (1M2)										
1.6	10.98 - 07.04	74	1595	4	AKL/APF/AEH	**CL002**	1			
1.6 16V	06.00 - 05.06	77	1598	4	AUS	**CL002**	1			coil 4xPIN / engine code
				4	BCB/AZD	**CL003**	4			pencil / engine code
1.8 20V	10.98 - 07.04	92	1781	4	AGN/APG	**CL002**	1			
1.8 20VT	09.00 - 07.04	132	1781	4	APP/AUQ	**CL005**	4			pencil
2.3 V5	10.98 - 11.00	110	2324	5	AGZ	**CL020**	1			
2.3 V5 20V	09.00 - 11.03	125	2324	5	AQN	**CL023**	5			pencil
Toledo III (5P2)										
1.6	10.04 - 05.09	75	1595	4	BGU/BSF/BSE	**CL002**	1			
1.8 TFSI	01.07 - 05.09	118	1798	4	BZB/CDAA/BYT	**CL011**	4			pencil
2.0 FSI	10.04 - 05.09	110	1984	4	BLR/BLY/BVZ/BVY	**CL011**	4			pencil
2.0 TFSI	11.05 - 05.09	147	1984	4	BWA	**CL011**	4			pencil
Toledo IV (KG3)										
1.2	07.12 -	55	1198	3	CGPC	**CL003**	3			pencil
1.2 TSI	07.12 -	63	1197	4	CBZA	**CL002**	1			
1.2 TSI	07.12 -	77	1197	4	CBZB	**CL002**	1			
1.2 TSI	05.15 -	81	1197	4	CJZD	**CL031**	4			pencil
1.4 TSI	07.12 -	90	1390	4	CAXA	**CL003**	4			pencil
1.4 TSI	05.15 -	92	1395	4	CZCA	**CL031**	4			pencil
1.6	07.13 -	77	1598	4	CFNA	**CL003**	4			pencil
SKODA										
130 G,GL (S136)										
1.3	05.88 - 10.91	46	1280	4		**CL012**	1			
130 GL										
1.3	08.87 - 10.91	39	1280	4		**CL012**	1			
130 GL (S135)										
1.3	05.88 - 10.91	43	1280	4	135/8	**CL012**	1			
130 L,GL										
1.3	02.85 - 10.91	45	1280	4	742.13	**CL012**	1			
Citigo										
1.0	10.11 -	44	999	3	CHYA	**CL031**	3			pencil
1.0	10.11 -	55	999	3	CHYB	**CL031**	3			pencil
1.0 CNG	11.12 -	50	999	3	CPGA	**CL031**	3			pencil
Fabia (6Y2)										
1.0	12.99 - 08.02	37	996	4	AQV/ARV	**CL007**	1			rail coil
1.2	08.02 - 03.08	40	1198	3	AWY/BMD	**CL009**	3			pencil
1.2	01.03 - 03.08	47	1198	3	AZQ/BME	**CL003**	3			pencil
1.4	08.00 - 08.02	44	1397	4	AZF/AZE	**CL007**	1			rail coil
1.4	08.99 - 05.03	50	1397	4	AME/ATZ/AQW	**CL007**	1			rail coil
1.4 16V	12.99 - 03.08	55	1390	4	AUA	**CL002**	1			coil 4xPIN / engine code
				4	BBY/BKY	**CL003**	4			pencil / engine code
1.4 16V	12.99 - 03.08	74	1390	4	AUB	**CL002**	1			coil 4xPIN / engine code
				4	BBZ	**CL003**	4			pencil / engine code
2.0	12.99 - 03.08	85	1984	4	AZL	**CL002**	1			
Fabia										
1.2	12.06 - 12.14	44	1198	3	BBM/CHFA	**CL009**	3			pencil
1.2	01.07 - 12.14	51	1198	3	CEVA/BZG/CGPA/CHTA	**CL003**	3			pencil
1.2 12V	11.11 - 12.14	44	1198	3	CGPB	**CL009**	3			pencil
1.2 TSI	03.10 - 12.14	63	1197	4	CBZA	**CL002**	1			
1.2 TSI	03.10 - 12.14	77	1197	4	CBZB	**CL002**	1			
1.4	01.07 - 12.14	63	1390	4	CGGB/BXW	**CL003**	4			pencil
1.4 TSI RS	05.10 - 12.14	132	1390	4	CAVE/CTHE	**CL003**	4			pencil
1.6	04.07 - 12.14	77	1598	4	BTS/CFNA	**CL003**	4			pencil
Fabia (NJ3)										
1.0	08.14 -	44	999	3	CHYA	**CL031**	3			pencil
1.0	08.14 -	55	999	3	CHYB	**CL031**	3			pencil
1.2 TSI	08.14 -	66	1197	4	CJZC	**CL031**	4			pencil
1.2 TSI	08.14 -	81	1197	4	CJZD	**CL031**	4			pencil
Fabia Combi (6Y5)										
1.2	07.01 - 12.07	40	1198	3	AWY/BMD	**CL009**	3			pencil
1.2	01.03 - 12.07	47	1198	3	AZQ/BME	**CL003**	3			pencil
1.4	04.00 - 03.03	44	1397	4	AZF/AZE	**CL007**	1			rail coil
1.4	04.00 - 05.03	50	1397	4	AME/ATZ/AQW	**CL007**	1			rail coil
1.4 16V	05.00 - 12.07	55	1390	4	AUA	**CL002**	1			coil 4xPIN / engine code
				4	BBY/BKY	**CL003**	4			pencil / engine code
1.4 16V	04.06 - 12.07	59	1390	4	BUD	**CL003**	4			pencil
1.4 16V	04.00 - 12.07	74	1390	4	AUB	**CL002**	1			coil 4xPIN / engine code
				4	BBZ	**CL003**	4			pencil / engine code
2.0	04.00 - 12.07	85	1984	4	AZL	**CL002**	1			
Fabia Combi										
1.2	10.07 - 11.14	44	1198	3	BBM/CHFA	**CL009**	3			pencil

SKODA Fabia Combi ▶

model	year	kW	cm³	cyl	engine	coil	pcs	boot	pcs	info
SKODA										
Fabia Combi										
1.2	10.07 - 12.14	51	1198	3	CEVA/BZG/CGPA/CHTA	**CL003**	3			pencil
1.2 12V	11.11 - 12.14	44	1198	3	CGPB	**CL009**	3			pencil
1.2 TSI	03.10 - 12.14	63	1197	4	CBZA	**CL002**	1			
1.2 TSI	03.10 - 12.14	77	1197	4	CBZB	**CL002**	1			
1.4	10.07 - 12.14	63	1390	4	CGGB/BXW	**CL003**	4			pencil
1.4 TSI RS	05.10 - 12.14	132	1390	4	CAVE/CTHE	**CL003**	4			pencil
1.6	10.07 - 12.14	77	1598	4	BTS/CFNA	**CL003**	4			pencil
Fabia Combi (NJ5)										
1.0	10.14 -	44	999	3	CHYA	**CL031**	3			pencil
1.0	10.14 -	55	999	3	CHYB	**CL031**	3			pencil
1.2 TSI	10.14 -	66	1197	4	CJZC	**CL031**	4			pencil
1.2 TSI	10.14 -	81	1197	4	CJZD	**CL031**	4			pencil
Fabia Praktik										
1.2	07.01 - 12.07	40	1198	3	AWY/BMD	**CL009**	3			pencil
1.2	01.03 - 12.07	47	1198	3	AZQ/BME	**CL003**	3			pencil
1.4	07.01 - 05.03	50	1397	4	AME/ATZ/AQW	**CL007**	1			rail coil
Fabia Sedan (6Y3)										
1.2	07.01 - 12.07	40	1198	3	AWY/BMD	**CL009**	3			pencil
1.2	01.03 - 12.07	47	1198	3	AZQ/BME	**CL003**	3			pencil
1.4	04.00 - 08.02	44	1397	4	AZF/AZE	**CL007**	1			rail coil
1.4	07.01 - 05.03	50	1397	4	AME/ATZ/AQW	**CL007**	1			rail coil
1.4 16V	10.99 - 12.07	55	1390	4	AUA	**CL002**	1			coil 4xPIN / engine code
				4	BBY/BKY	**CL003**	4			pencil / engine code
1.4 16V	04.06 - 12.07	59	1390	4	BUD	**CL003**	4			pencil
1.4 16V	12.99 - 12.07	74	1390	4	AUB	**CL002**	1			coil 4xPIN / engine code
				4	BBZ	**CL003**	4			pencil / engine code
2.0	12.99 - 12.07	85	1984	4	AZL	**CL002**	1			
Favorit (781)										
1.3 carb	07.91 -	43	1289	4	781.135	**CL012**	1			carburettor
1.3 carb	09.88 - 07.91	46	1289	4	781.136	**CL012**	1			carburettor
1.3 carb	03.93 - 09.94	50	1289	4	781.136X	**CL012**	1			carburettor
1.3 SPI	03.93 - 06.95	40	1289	4	781.135B	**CL001**	1			injection SPI
1.3 SPI	03.93 - 06.95	50	1289	4	781.136B	**CL001**	1			injection SPI
Favorit Forman (785)										
1.3 carb	07.91 -	43	1289	4	781.135	**CL012**	1			carburettor
1.3 carb	- 07.91	46	1289	4	781.136	**CL012**	1			carburettor
1.3 carb	03.93 - 09.94	50	1289	4	781.136X	**CL012**	1			carburettor
1.3 SPI	03.93 - 06.95	40	1289	4	781.135B	**CL001**	1			injection SPI
1.3 SPI	03.93 - 06.95	50	1289	4	781.136B	**CL001**	1			injection SPI
Favorit Pick-up (787)										
1.3 carb	07.91 -	43	1289	4	781.135	**CL012**	1			carburettor
1.3 carb	- 07.91	46	1289	4	781.136	**CL012**	1			carburettor
1.3 carb	03.93 - 09.94	50	1289	4	781.136X	**CL012**	1			carburettor
1.3 SPI	03.93 - 06.95	40	1289	4	781.135B	**CL001**	1			injection SPI
1.3 SPI	03.93 - 06.95	50	1289	4	781.136B	**CL001**	1			injection SPI
Felicia I (6U1)										
1.3	10.94 - 03.98	40	1289	4	135B/AMG	**CL001**	1			
1.3	10.94 - 03.98	43	1289	4	AMJ/135 L	**CL013**	1			
1.3	10.94 - 03.98	50	1289	4	136B/AMH	**CL001**	1			
1.6 LX	08.95 - 03.98	55	1598	4	EA111/AEE	**CL001**	1			
Felicia I Combi (6U5)										
1.3	08.95 - 03.98	43	1289	4	AMJ/135 L	**CL013**	1			
1.3 LX	08.95 - 03.98	40	1289	4	135B/AMG	**CL001**	1			
1.3 LXI	08.95 - 03.98	50	1289	4	136B/AMH	**CL001**	1			
1.6 GLX	08.95 - 03.98	55	1598	4	AEE	**CL001**	1			
Felicia I Pick-up (797)										
1.3	06.97 - 04.02	40	1289	4	135B/135M/AMG	**CL001**	1			
1.3	06.97 - 04.02	50	1289	4	136B/136M/AMH	**CL001**	1			
1.6	06.97 - 04.02	55	1598	4	AEE	**CL001**	1			
Felicia II (6U1)										
1.3	01.98 - 06.01	40	1289	4	AMG	**CL008**	1			rail coil
1.3	01.98 - 06.01	43	1289	4	AMJ	**CL008**	1			rail coil
1.3	01.98 - 06.01	50	1289	4	AMH	**CL008**	1			rail coil
1.6	01.98 - 06.01	55	1598	4	AEE	**CL001**	1			
Felicia II Combi (6U5)										
1.3	01.98 - 06.01	50	1289	4	AMH	**CL008**	1			rail coil
1.6	01.98 - 06.01	55	1598	4	AEE	**CL001**	1			
Octavia (1U2)										
1.4	04.99 - 03.01	44	1397	4	AMD	**CL007**	1			rail coil
1.4 16V	09.00 - 12.10	55	1390	4	AXP/BCA	**CL002**	1			
1.6	09.96 - 09.04	55	1598	4	AEE	**CL001**	1			

SKODA Octavia (1U2) ▶

model	year	kW	cm³	cyl	engine	coil	pcs	boot	pcs	info
SKODA										
Octavia (1U2)										
1.6	02.97 - 12.07	74	1595	4	AKL/AEH	**CL002**	1			
1.6	11.00 - 12.10	75	1595	4	AVU/BFQ	**CL002**	1			
1.8	09.96 - 07.00	92	1781	4	AGN	**CL002**	1			
1.8 T	08.97 - 12.10	110	1781	4	AGU	**CL004**	4	CP001	4	pencil / engine code
				4	ARX/ARZ/AUM	**CL005**	4			pencil / engine code
1.8 T 4x4	05.01 - 05.06	110	1781	4	AGU	**CL004**	4	CP001	4	pencil / engine code
				4	ARX/AUM	**CL005**	4			pencil / engine code
1.8 T RS	05.01 - 01.06	132	1781	4	AUQ	**CL005**	4			pencil
2.0	04.99 - 05.07	85	1984	4	APK/AZH/AZJ/AQY/AEG	**CL002**	1			
Octavia (1Z3)										
1.2 TSI	02.10 - 06.13	77	1197	4	CBZB	**CL002**	1			
1.4	05.04 - 05.06	55	1390	4	BCA	**CL003**	4			pencil
1.4	06.04 - 04.13	59	1390	4	BUD/CGGA	**CL003**	4			pencil
1.4 TSI	11.08 - 06.13	90	1390	4	CAXA	**CL003**	4			pencil
1.6	06.04 - 06.13	75	1595	4	BGU/CCSA/BSF/CMXA/BSE	**CL002**	1			
1.6 FSI	02.04 - 10.08	85	1598	4	BLF	**CL003**	4			pencil
1.6 LPG	08.09 - 11.12	75	1595	4	CHGA	**CL002**	1			
1.6 MultiFuel	01.08 - 06.13	75	1595	4	CCSA/CMXA	**CL002**	1			
1.8 TSI	06.07 - 04.13	118	1798	4	BZB/CDAA	**CL011**	4			pencil
2.0 FSI	11.04 - 10.08	110	1984	4	BLY/BLR/BVZ/BVY	**CL011**	4			pencil
2.0 RS	10.05 - 02.13	147	1984	4	BWA/CCZA	**CL011**	4			pencil
Octavia (5E3)										
1.2 TSI	11.12 -	63	1197	4	CJZB	**CL031**	4			pencil
1.2 TSI	11.12 -	77	1197	4	CJZA	**CL031**	4			pencil
1.2 TSI	05.15 -	81	1197	4	CYVB	**CL031**	4			pencil
1.4 TSI	11.12 -	103	1395	4	CHPA	**CL031**	4			pencil
1.4 TSI	08.14 -	110	1395	4	CZDA/CHPB	**CL031**	4			pencil
1.4 TSI G-Tec	11.13 -	81	1395	4	CPWA	**CL031**	4			pencil
1.6	01.14 -	81	1598	4	CWVA	**CL031**	4			pencil
1.8 TSI	11.12 -	132	1798	4	CJSA	**CL032**	4			pencil
1.8 TSI 4x4	09.14 -	132	1798	4	CJSA	**CL032**	4			pencil
2.0 TSI RS	05.13 -	162	1984	4	CHHB	**CL032**	4			pencil
2.0 TSI RS	05.15 -	169	1984	4	CHHA	**CL032**	4			pencil
Octavia Combi (1U5)										
1.4 16V	08.00 - 12.10	55	1390	4	AXP/BCA	**CL002**	1			
1.6	07.98 - 09.04	55	1598	4	AEE	**CL001**	1			
1.6	07.98 - 12.07	74	1595	4	AKL/AEH	**CL002**	1			
1.6	09.00 - 12.10	75	1595	4	AVU/BFQ	**CL002**	1			
1.8 20V	07.98 - 07.00	92	1781	4	AGN	**CL002**	1			
1.8 T	07.98 - 12.10	110	1781	4	AGU	**CL004**	4	CP001	4	pencil / engine code
				4	ARX/ARZ/AUM	**CL005**	4			pencil / engine code
1.8 T 4x4	05.01 - 05.06	110	1781	4	AGU	**CL004**	4	CP001	4	pencil / engine code
				4	ARX/AUM	**CL005**	4			pencil / engine code
1.8 T RS	08.02 - 01.06	132	1781	4	AUQ	**CL005**	4			pencil
2.0	04.99 - 05.07	85	1984	4	APK/AZH/AQY/AEG	**CL002**	1			engine code
				4	AZJ	**CL010**	1			engine code
2.0 4x4	08.00 - 09.04	85	1984	4	AZH	**CL002**	1			engine code
				4	AZJ	**CL010**	1			engine code
2.0 4x4	01.00 - 12.10	88	1984	4	ATF	**CL002**	1			
Octavia Combi (1Z5)										
1.2 TSI	02.10 - 04.13	77	1197	4	CBZB	**CL002**	1			
1.4	05.06 - 06.13	59	1390	4	BUD/CGGA	**CL003**	4			pencil
1.4 TSI	11.08 - 06.13	90	1390	4	CAXA	**CL003**	4			pencil
1.6	09.04 - 06.13	75	1595	4	BGU/CCSA/BSF/CMXA/BSE	**CL002**	1			
1.6 FSI	02.04 - 10.08	85	1598	4	BLF	**CL003**	4			pencil
1.6 LPG	08.09 - 11.12	75	1595	4	CHGA	**CL002**	1			
1.6 MultiFuel	01.08 - 06.13	75	1595	4	CCSA/CMXA	**CL002**	1			
1.8 TSI	06.07 - 04.13	118	1798	4	BZB/CDAA	**CL011**	4			pencil
1.8 TSI 4x4	11.08 - 02.13	118	1798	4	CDAA	**CL011**	4			pencil
2.0 FSI	11.04 - 10.08	110	1984	4	BLY/BLR/BVZ/BVY	**CL011**	4			pencil
2.0 FSI 4x4	11.04 - 10.08	110	1984	4	BVX/BLX	**CL011**	4			pencil
2.0 RS	10.05 - 02.13	147	1984	4	BWA/CCZA	**CL011**	4			pencil
Octavia Combi (5E5)										
1.2 TSI	11.12 -	63	1197	4	CJZB	**CL031**	4			pencil
1.2 TSI	11.12 -	77	1197	4	CJZA	**CL031**	4			pencil
1.2 TSI	05.15 -	81	1197	4	CYVB	**CL031**	4			pencil
1.4 TSI	11.12 -	103	1395	4	CHPA	**CL031**	4			pencil
1.4 TSI	08.14 -	110	1395	4	CZDA/CHPB	**CL031**	4			pencil
1.4 TSI G-Tec	11.13 -	81	1395	4	CPWA	**CL031**	4			pencil
1.6	01.14 -	81	1598	4	CWVA	**CL031**	4			pencil
1.8 TSI	11.12 -	132	1798	4	CJSB/CJSA	**CL032**	4			pencil

SKODA Octavia Combi (5E5) ▶

model	year	kW	cm³	cyl	engine	coil	pcs	boot	pcs	info
SKODA										
Octavia Combi (5E5)										
1.8 TSI 4x4	11.12 -	132	1798	4	CJSB	**CL032**	4			pencil
2.0 TSI RS	11.12 -	162	1984	4	CHHB	**CL032**	4			pencil
2.0 TSI RS	05.15 -	169	1984	4	CHHA	**CL032**	4			pencil
Rapid (120G, 130G, 135G)										
1.3 (130G)	08.87 - 10.91	39	1280	4		**CL012**	1			
1.3 (130G)	03.85 - 08.88	45	1280	4	742,13	**CL012**	1			
1.3 S (135GL)	09.84 - 12.90	43	1280	4	135/8	**CL012**	1			
Rapid (NH3)										
1.2	07.12 -	55	1198	3	CGPC	**CL003**	3			pencil
1.2 TSI	07.12 -	63	1197	4	CBZA	**CL002**	1			
1.2 TSI	05.15 -	66	1197	4	CJZC	**CL031**	4			pencil
1.2 TSI	07.12 -	77	1197	4	CBZB	**CL002**	1			
1.4 TSI	07.12 -	90	1390	4	CAXA	**CL003**	4			pencil
1.4 TSI	05.15 -	92	1395	4	CZCA	**CL031**	4			pencil
1.6	07.12 -	77	1598	4	CFNA	**CL003**	4			pencil
Rapid Spaceback (NH1)										
1.2	07.12 -	55	1198	3	CGPC	**CL003**	3			pencil
1.2 TSI	07.12 -	63	1197	4	CBZA	**CL002**	1			
1.2 TSI	05.15 -	66	1197	4	CJZC	**CL031**	4			pencil
1.2 TSI	07.12 -	77	1197	4	CBZB	**CL002**	1			
1.4 TSI	07.12 -	90	1390	4	CAXA	**CL003**	4			pencil
1.4 TSI	05.15 -	92	1395	4	CZCA	**CL031**	4			pencil
1.6	07.12 -	77	1598	4	CFNA	**CL003**	4			pencil
Roomster (5J)										
1.2	05.06 - 01.07	47	1198	3	BME	**CL003**	3			pencil
1.2	01.07 -	51	1198	3	BZG/CGPA	**CL003**	3			pencil
1.2 TSI	03.10 -	63	1197	4	CBZA	**CL002**	1			
1.2 TSI	03.10 -	77	1197	4	CBZB	**CL002**	1			
1.4	09.06 -	63	1390	4	CGGB/BXW	**CL003**	4			pencil
1.6	09.06 -	77	1598	4	BTS/CFNA	**CL003**	4			pencil
Roomster Praktik (5J)										
1.2	03.07 -	51	1198	3	BZG/CGPA	**CL003**	3			pencil
1.2 TSI	03.10 -	63	1197	4	CBZA	**CL002**	1			
1.4	03.07 -	63	1390	4	CGGB/BXW	**CL003**	4			pencil
Superb (3U4)										
1.8 T	12.01 - 03.08	110	1781	4	AWT	**CL005**	4			pencil
2.0	12.01 - 03.08	85	1984	4	AZM	**CL002**	1			
2.8 V6	12.01 - 03.08	142	2771	6	AMX	**CL006**	1			
Superb (3T4)										
1.4 TSI	07.08 -	92	1390	4	CAXC	**CL003**	4			pencil
1.8 TSI	03.08 -	118	1798	4	BZB/CDAA	**CL011**	4			pencil
1.8 TSI 4x4	11.08 -	118	1798	4	CDAA	**CL011**	4			pencil
2.0 TSI	05.10 -	147	1984	4	CCZA	**CL011**	4			pencil
3.6 V6 4x4	11.08 -	191	3580	6	CDVA	**CL016**	6			pencil
Superb (3V3)										
1.4 TSI	03.15 -	92	1395	4	CZCA	**CL031**	4			pencil
1.4 TSI	03.15 -	110	1395	4	CZDA/CZEA	**CL031**	4			pencil
1.4 TSI 4x4	03.15 -	110	1395	4	CZDA/CZEA	**CL031**	4			pencil
2.0 TSI	03.15 -	162	1984	4	CHHB	**CL032**	4			pencil
2.0 TSI 4x4	03.15 -	206	1984	4	CJXA	**CL032**	4			pencil
Superb Combi (3T5)										
1.4 TSI	10.09 -	92	1390	4	CAXC	**CL003**	4			pencil
1.8 TSI	10.09 -	118	1798	4	CDAA	**CL011**	4			pencil
1.8 TSI 4x4	10.09 -	118	1798	4	CDAA	**CL011**	4			pencil
2.0 TSI	05.10 -	147	1984	4	CCZA	**CL011**	4			pencil
3.6 V6 4x4	10.09 -	191	3580	6	CDVA	**CL016**	6			pencil
Superb Combi (3V5)										
1.4 TSI	03.15 -	92	1395	4	CZCA	**CL031**	4			pencil
1.4 TSI	03.15 -	110	1395	4	CZDA/CZEA	**CL031**	4			pencil
1.4 TSI 4x4	03.15 -	110	1395	4	CZDA/CZEA	**CL031**	4			pencil
1.8 TSI	03.15 -	132	1798	4	CJSA/CJSC	**CL032**	4			pencil
2.0 TSI	03.15 -	162	1984	4	CHHB	**CL032**	4			pencil
2.0 TSI 4x4	03.15 -	206	1984	4	CJXA	**CL032**	4			pencil
Yeti (5L)										
1.2 TSI	09.09 -	77	1197	4	CBZB	**CL002**	1			
1.2 TSI	05.15 -	81	1197	4	CYVB	**CL031**	4			pencil
1.4 TSI	06.10 -	90	1390	4	CAXA	**CL003**	4			pencil
1.4 TSI	05.15 -	92	1395	4	CZCA	**CL031**	4			pencil
1.4 TSI 4x4	05.15 -	110	1395	4	CZDA	**CL031**	4			pencil
1.6	04.14 - 02.15	81	1598	4	CWVA	**CL031**	4			pencil
1.8 TSI 4x4	11.09 -	112	1798	4	CDAB	**CL011**	4			pencil

SKODA Yeti (5L)

model	year	kW	cm³	cyl	engine	coil	pcs	boot	pcs	info
SKODA										
Yeti (5L)										
1.8 TSI 4x4	05.09 -	118	1798	4	CDAA	**CL011**	4			pencil
SMART										
Cabrio (450)										
0.6	03.00 - 01.04	40	599	3	M 160 E6AL B03/M 160.920	**CL607**	3			
0.6	01.01 - 01.04	45	599	3	M 160 E6AL B05/M 160.920	**CL607**	3			
0.6	06.02 - 01.04	52	599	3	M 160.920	**CL607**	3			
0.7	01.03 - 01.04	45	698	3	M 160.910	**CL607**	3			
0.7	01.03 - 01.04	55	698	3	M 160.910	**CL607**	3			
City-Coupe (450)										
0.6	07.98 - 01.04	33	599	3	M 160 E6AL B04/M 160.920	**CL607**	3			
0.6	07.98 - 01.04	40	599	3	M 160 E6AL B03/M 160.920	**CL607**	3			
0.6	01.01 - 01.04	45	599	3	M 160 E6AL B05/M 160.920	**CL607**	3			
0.6	06.02 - 01.04	52	599	3	M 160.920	**CL607**	3			
0.7	01.03 - 01.04	37	698	3	M 160.910	**CL607**	3			
0.7	01.03 - 01.04	45	698	3	M 160.910	**CL607**	3			
0.7	01.03 - 01.04	55	698	3	M 160.910	**CL607**	3			
Crossblade (450)										
0.6	06.02 - 12.03	52	599	3	M 160.920	**CL607**	3			
Forfour (454)										
1.1	02.05 - 06.06	47	1124	3	M 134.911	**CL597**	3			pencil
1.1	01.04 - 06.06	55	1124	3	M 134.910	**CL597**	3			pencil
1.3	01.04 - 06.06	70	1332	4	M 135.930	**CL597**	4			pencil
1.5	01.04 - 06.06	80	1499	4	M 135.950	**CL597**	4			pencil
Fortwo Cabrio (450)										
0.7	01.04 - 01.07	45	698	3	M 160.910	**CL607**	3			
0.7	01.04 - 01.07	55	698	3	M 160.910	**CL607**	3			
Fortwo Coupe (450)										
0.7	01.04 - 01.07	37	698	3	M 160.910	**CL607**	3			
0.7	01.04 - 01.07	45	698	3	M 160.910	**CL607**	3			
0.7	01.04 - 01.07	55	698	3	M 160.910	**CL607**	3			
Roadster (452)										
0.7	04.03 - 11.05	45	698	3	M 160.921	**CL607**	3			
0.7	04.03 - 11.05	60	698	3	M 160.922	**CL607**	3			
0.7 Brabus	12.03 - 11.05	74	698	3	M 160.923	**CL607**	3			
Roadster Coupe (452)										
0.7	06.03 - 11.05	45	698	3	M 160.922	**CL607**	3			
0.7	04.03 - 11.05	60	698	3	M 160.921	**CL607**	3			
0.7 Brabus	12.03 - 11.05	74	698	3	M 160.923	**CL607**	3			
SSANG YONG										
Korando (KJ)										
2.0	05.97 -	94	1998	4		**CL606**	2	CP004	2	semidirect / pencil
2.3	05.97 -	103	2295	4	M 111.970	**CL606**	2	CP004	2	semidirect / pencil
2.3	01.99 -	105	2295	4		**CL606**	2	CP004	2	semidirect / pencil
3.2	12.96 -	154	3199	6	M 104.995	**CL606**	3	CP004	3	semidirect / pencil
3.2	01.99 -	156	3199	6	M 104.995	**CL606**	3	CP004	3	semidirect / pencil
3.2	06.97 -	162	3199	6	M 104.992	**CL606**	3	CP004	3	semidirect / pencil
Korando Cabrio (KJ)										
2.3	11.97 -	103	2295	4		**CL606**	3	CP004	3	semidirect / pencil
2.3	02.99 -	105	2295	4		**CL606**	2	CP004	2	semidirect / pencil
3.2	01.99 -	156	3199	6	M 104.995	**CL606**	3	CP004	3	semidirect / pencil
3.2	06.97 -	162	3199	6	M 104.992	**CL606**	3	CP004	3	semidirect / pencil
Musso (FJ)										
2.0	10.96 -	93	1998	4	E20	**CL606**	2	CP004	2	semidirect / pencil
2.3	10.96 -	103	2295	4	M 111.970	**CL606**	2	CP004	2	semidirect / pencil
2.3	04.03 -	110	2295	4		**CL606**	2	CP004	2	semidirect / pencil
3.2	06.96 -	162	3199	6	M 104.992	**CL606**	3	CP004	3	semidirect / pencil
Rexton (GAB_)										
3.2	04.02 -	162	3199	6	G32D	**CL606**	3	CP004	3	semidirect / pencil
SUBARU										
Forester (SF)										
2.0	06.98 - 09.02	92	1994	4	EJ20	**CL570**	1			
Forester (SG)										
2.0	09.02 -	92	1994	4	EJ20	**CL591**	1			
2.0 X	09.05 -	116	1994	4	EJ204	**CL591**	1			
2.5	12.03 -	155	2457	4	EJ25	**CL591**	1			
2.5 XT	09.05 -	169	2457	4	EJ255	**CL934**	4			pencil
Forester (SH)										
2.0 AWD	01.10 -	110	1995	4	FB20	**CL934**	4			pencil
2.0 AWD	01.08 -	110	1994	4	EJ20	**CL934**	4			pencil
2.5 AWD	01.09 -	126	2457	4	EJ25	**CL934**	4			pencil

model	year	kW	cm³	cyl	engine	coil	pcs	boot	pcs	info
SUBARU										
Impreza CC										
2.5 WRX	09.05 -	169	2457	4	EJ255	**CL934**	4			pencil
Impreza CC (GR, GH, G3)										
2.0 R AWD	01.08 -	110	1994	4	EJ204	**CL917**	4	CP057	4	pencil
2.5 WRX STI AWD	01.08 -	221	2457	4	EJ257	**CL934**	4			pencil
Impreza Coupe (GFC)										
1.6	12.96 - 12.00	66	1597	4	EJ16E	**CL570**	1			
2.0 AWD	12.95 - 06.97	85	1994	4	EJ20	**CL570**	1			coil 4xDIN / year
	12.97 - 12.00	85	1994	4	EJ20	**CL591**	1			coil 4xSAE / year
2.0 Turbo AWD	12.96 - 06.98	155	1994	4	EJ20G	**CL570**	1			
2.0 i	11.95 - 07.98	85	1994	4	EJ20E	**CL570**	1			
2.2 AWD	09.98 - 09.00	96	2212	4	EJ22E	**CL591**	1			
2.2 i	09.98 - 09.00	96	2212	4	EJ22E	**CL591**	1			
Impreza Sedan (GC)										
1.6 i	08.92 - 12.00	66	1597	4	EJ16	**CL570**	1			
1.6 i AWD	08.92 - 12.00	66	1597	4	EJ16	**CL570**	1			
1.8 i AWD	08.92 - 12.00	76	1820	4	EJ18/EJ18E	**CL570**	1			
2.0 Turbo GT AWD	03.94 - 06.98	155	1994	4	EJ20 (Turbo)	**CL570**	1			
2.0 i	09.98 - 09.00	92	1994	4	EJ201	**CL591**	1			
2.0 i AWD	10.95 - 06.97	85	1994	4	EJ20	**CL570**	1			coil 4xDIN / year
	12.97 - 12.00	85	1994	4	EJ20	**CL591**	1			coil 4xSAE / year
2.0 i AWD	06.98 - 12.00	92	1994	4	EJ20	**CL591**	1			
2.2 GX AWD	09.98 - 09.00	96	2212	4	EJ22E	**CL591**	1			
2.2 GX AWD	11.95 - 08.98	97	2212	4	EJ22	**CL591**	1			
Impreza Sedan (GD)										
2.0 i AWD	12.00 -	92	1994	4	EJ20	**CL591**	1			
2.0 i R AWD	09.05 -	118	1994	4	EJ204	**CL934**	4			pencil
2.0 WRX STi AWD	11.01 -	195	1994	4	EJ207	**CL917**	4	CP057	4	pencil
2.0 WRX Turbo AWD	10.02 -	160	1994	4	EJ205	**CL917**	4	CP057	4	pencil
2.0 WRX Turbo AWD	12.02 -	165	1994	4	EJ205	**CL917**	4	CP057	4	pencil
2.5 i WRX AWD	09.05 -	169	2457	4	EJ255	**CL934**	4			pencil
2.5 WRX STi AWD	09.05 -	206	2457	4	EJ257	**CL934**	4			pencil
Impreza Station Wagon (GF)										
1.6	01.93 - 08.98	66	1597	4	EJ16E	**CL570**	1			
1.6 i	06.98 - 12.00	70	1597	4	EJ161	**CL570**	1			
1.6 i AWD	08.92 - 12.00	66	1597	4	EJ16	**CL570**	1			
1.8 i AWD	08.92 - 12.00	76	1820	4	EJ18	**CL570**	1			
2.0	09.96 - 08.98	85	1994	4	EJ20E	**CL570**	1			
2.0 i	09.98 - 09.00	92	1994	4	EJ201	**CL591**	1			
2.0 i AWD	12.95 - 06.97	85	1994	4	EJ20	**CL570**	1			coil 4xDIN / year
	12.97 - 12.00	85	1994	4	EJ20	**CL591**	1			coil 4xSAE / year
2.0 i Turbo AWD	03.94 - 06.98	155	1994	4	EJ20 (Turbo)	**CL570**	1			
2.0 i 16V AWD	06.98 - 12.00	92	1994	4	EJ20/EJ20E	**CL591**	1			
2.2 GX AWD	09.98 - 09.00	96	2212	4	EJ22E	**CL591**	1			
2.2 GX AWD	11.95 - 08.98	97	2212	4	EJ22	**CL591**	1			
Impreza Station Wagon (GG)										
2.0 AWD	12.00 -	92	1994	4	EJ20	**CL591**	1			
2.0 Turbo AWD	10.02 -	160	1994	4	EJ205	**CL917**	4	CP057	4	pencil
2.0 WRX Turbo AWD	12.02 -	165	1994	4	EJ205	**CL917**	4	CP057	4	pencil
Justy II (JMA, MS)										
1.3 4x4	04.01 - 11.03	63	1298	4	G13BB	**CL561**	2	CP056	2	semidirect / pencil
Justy III (G3X)										
1.5	09.03 -	73	1490	4	M15A	**CL561**	2	CP056	2	semidirect / pencil
Justy IV										
1.0	01.07 -	51	998	3	1KR-FE	**CL555**	3	CP042	3	pencil
Legacy I (BC)										
2000 4WD	08.91 - 07.94	85	1994	4	EJ20 EMPI	**CL570**	1			
2000 Turbo 4WD	05.92 - 07.94	147	1994	4	EJ20-GN	**CL570**	1			
2200 4WD	01.89 - 07.94	100	2212	4	EJ22 EMPI	**CL570**	1			
Legacy I Station Wagon (BC, BJF)										
2000	09.91 - 12.93	85	1994	4	EJ20 EMPI	**CL570**	1			
2000 4WD	09.91 - 07.94	85	1994	4	EJ20 EMPI	**CL570**	1			
2000 Turbo Super 4WD	05.92 - 07.94	147	1994	4	EJ20-GN	**CL570**	1			
2200 Super 4WD	01.89 - 07.94	100	2212	4	EJ22 EMPI	**CL570**	1			
Legacy II (BD, BG)										
2.0 i	09.94 - 03.99	85	1994	4	EJ20E	**CL570**	1			
2.0 i 4WD	09.94 - 03.99	85	1994	4	EJ20	**CL570**	1			
2.2 i 4WD	09.94 - 03.99	94	2212	4	EJ22 EMPI	**CL570**	1			
2.2 i 4WD	06.96 - 03.99	96	2212	4	EJ22 EMPI	**CL570**	1			
2.5 i 4WD	06.96 - 03.99	110	2457	4	EJ25D	**CL570**	1			
Legacy II Station Wagon (BD, BG)										
2.0 i	09.94 - 11.98	85	1994	4	EJ20 EMPI	**CL570**	1			

SUBARU Legacy II Station Wagon (BD, BG) ▶

model	year	kW	cm³	cyl	engine	coil	pcs	boot	pcs	info
SUBARU										
Legacy II Station Wagon (BD, BG)										
2.0 i 4WD	09.94 - 11.98	85	1994	4	EJ20	**CL570**	1			
2.2 i 4WD	02.94 - 12.98	94	2212	4	EJ22 EMPI	**CL570**	1			
2.2 i 4WD	06.96 - 11.98	96	2212	4	EJ22 EMPI	**CL570**	1			
2.5 i 4WD	06.96 - 11.98	110	2457	4	EJ25D	**CL570**	1			
Legacy III (BE, BH)										
2.0	04.99 - 08.03	92	1994	4	EJ20	**CL591**	1			
2.5	10.98 - 08.03	115	2457	4	EJ25	**CL591**	1			
Legacy III Station Wagon (BE, BH)										
2.0 AWD	12.98 - 08.03	92	1994	4	EJ20	**CL591**	1			
2.5 AWD	12.98 - 08.03	115	2457	4	EJ25	**CL591**	1			
Legacy IV (BL, BP)										
2.0 R	09.07 -	110	1994	4	EJ204	**CL934**	4			pencil
Legacy IV Station Wagon (BL, BP, B13_)										
2.0 AWD	06.05 -	121	1994	4	EJ20	**CL934**	4			pencil
2.0 R AWD	09.07 -	110	1994	4	EJ204	**CL934**	4			pencil
Outback (BE, BH)										
2.5	10.00 - 08.03	115	2457	4	EJ25	**CL591**	1			
3.0 H6	10.00 - 08.03	154	3000	6	EZ30	**CL933**	6			pencil
Outback (BL, BP)										
2.5	11.03 - 09.09	121	2457	4	EJ25D	**CL591**	1			
2.5	09.08 - 09.09	127	2457	4	EJ251	**CL591**	1			
3.0 AWD	11.03 - 09.09	180	3000	6	EZ30	**CL933**	6			pencil
Tribeca (B9)										
3.0	10.06 -	180	3000	6	EZ30	**CL933**	6			pencil
3.0	01.05 -	184	2999	6	EZ30	**CL933**	6			pencil
3.6	09.07 -	190	3630	6	EZ36D	**CL933**	6			pencil
SUZUKI										
Alto (HA11)										
1.0	09.94 - 09.98	39	993	4	G10BB	**CL923**	4			pencil
Alto (HA12, HA23)										
1.0	01.00 - 06.02	43	993	4	G10BB	**CL923**	4			pencil
Alto (HA24)										
1.1	09.04 - 12.08	46	1061	4	F10DN/F10D	**CL561**	2	CP056	2	semidirect / pencil
Baleno (EG)										
1.3	02.99 - 05.02	52	1298	4	G13BA	**CL561**	2	CP056	2	semidirect / pencil
1.3 i 16V	02.99 - 05.02	63	1298	4	G13BB	**CL561**	2	CP056	2	semidirect / pencil
1.6 i 16V	02.99 - 05.02	72	1590	4	G16B	**CL561**	2	CP056	2	semidirect / pencil
1.6 i 16V 4x4	02.99 - 05.02	72	1590	4	G16B	**CL561**	2	CP056	2	semidirect / pencil
1.8 GTX	03.96 - 05.02	89	1839	4	J18A	**CL512**	4	CP029	4	pencil OEM No. 33410-77E11
						CL557	4	CP029	4	pencil OEM No. 33410-77E21
Baleno CC (EG)										
1.3	09.96 - 05.02	52	1298	4	G13BA	**CL561**	2	CP056	2	semidirect / pencil
1.3 i 16V	02.99 - 05.02	63	1298	4	G13BB	**CL561**	2	CP056	2	semidirect / pencil
1.6 i 16V	02.99 - 05.02	72	1590	4	G16B	**CL561**	2	CP056	2	semidirect / pencil
1.6 i 16V 4x4	02.99 - 05.02	72	1590	4	G16B	**CL561**	2	CP056	2	semidirect / pencil
1.8 GTX	03.96 - 05.02	89	1839	4	J18A	**CL512**	4	CP029	4	pencil OEM No. 33410-77E11
						CL557	4	CP029	4	pencil OEM No. 33410-77E21
Baleno Combi (EG)										
1.3 16V	02.99 - 05.02	63	1298	4	G13BB	**CL561**	2	CP056	2	semidirect / pencil
1.6 i 16V	02.99 - 05.02	72	1590	4	G16B	**CL561**	2	CP056	2	semidirect / pencil
1.6 i 16V	02.99 - 05.02	73	1590	4	G16B	**CL561**	2	CP056	2	semidirect / pencil
1.6 i 16V 4x4	02.99 - 05.02	72	1590	4	G16B	**CL561**	2	CP056	2	semidirect / pencil
1.6 i 16V 4x4	02.99 - 05.02	73	1590	4	G16B	**CL561**	2	CP056	2	semidirect / pencil
1.8 i 16V	08.96 - 05.02	89	1839	4	J18A	**CL512**	4	CP029	4	pencil OEM No. 33410-77E11
						CL557	4	CP029	4	pencil OEM No. 33410-77E21
Carry Van (FD)										
1.3	03.99 -	58	1298	4	G13BB	**CL561**	2	CP056	2	semidirect / pencil
1.3 16 V	03.00 -	58	1298	4	G13BB	**CL561**	2	CP056	2	semidirect / pencil
Grand Vitara I (FT)										
1.6 4x4	03.98 - 07.03	69	1590	4	G16B	**CL533**	2			semidirect / pencil
2.0 4x4	03.98 - 07.03	94	1995	4	J20A	**CL557**	4	CP029	4	pencil
2.5 V6 24V	04.98 - 07.03	106	2493	6	H 25 A	**CL557**	6	CP029	6	pencil
2.5 V6 24V 4x4	04.01 - 07.03	116	2493	6	H 25 A	**CL557**	6	CP029	6	pencil
2.7 4x4	09.01 - 07.03	127	2736	6	H 27 A	**CL557**	6	CP029	6	pencil
2.7 4x4	04.03 - 07.03	135	2736	6	H 27 A	**CL557**	6	CP029	6	pencil
Grand Vitara II (JT)										
1.6 Allrad	04.05 -	78	1586	4	M16A	**CL561**	2	CP056	2	semidirect / pencil
2.0 Allrad	10.05 -	103	1995	4	J20A	**CL512**	4	CP029	4	pencil OEM No. 33410-77E11
						CL557	4	CP029	4	pencil OEM No. 33410-77E21
3.2 Allrad	01.09 - 02.15	171	3195	6	N32A	**CL245**	6			pencil

model	year	kW	cm³	cyl	engine	coil	pcs	boot	pcs	info
SUZUKI										
Ignis (FH)										
1.3	10.00 - 09.03	61	1328	4	M13A	**CL561**	2	CP056	2	semidirect / pencil
1.3 4WD	10.00 - 09.03	61	1328	4	M13A	**CL561**	2	CP056	2	semidirect / pencil
Ignis II										
1.3	09.03 -	69	1328	4	M13A	**CL561**	2	CP056	2	semidirect / pencil
1.3 4x4	09.03 -	69	1328	4	M13A	**CL561**	2	CP056	2	semidirect / pencil
1.5	09.03 -	73	1490	4	M15A	**CL561**	2	CP056	2	semidirect / pencil
1.5 4x4	09.03 -	73	1490	4	M15A	**CL561**	2	CP056	2	semidirect / pencil
1.5 Sport	12.03 -	80	1490	4	M15A	**CL561**	2	CP056	2	semidirect / pencil
Jimny (FJ)										
1.3 16V	09.98 -	59	1298	4	G13BB	**CL533**	2			semidirect / pencil
1.3 16V	02.01 -	60	1328	4	M13A	**CL561**	2	CP056	2	semidirect / pencil
1.3 16V 4WD	09.98 -	59	1298	4	G13BB	**CL533**	2			semidirect / pencil
1.3 16V 4WD	02.01 -	60	1328	4	M13A	**CL561**	2	CP056	2	semidirect / pencil
1.3 16V 4x4	08.05 -	63	1328	4	M13A	**CL561**	2	CP056	2	semidirect / pencil
1.3 4WD	05.14 -	62	1328	4	M13A	**CL561**	2	CP056	2	semidirect / pencil
Liana (ER)										
1.3	03.02 -	66	1328	4	M13A	**CL561**	2	CP056	2	semidirect / pencil
1.6	03.02 -	76	1586	4	M16A	**CL561**	2	CP056	2	semidirect / pencil
1.6	01.05 -	79	1586	4	M16A	**CL561**	2	CP056	2	semidirect / pencil
1.6 4WD	03.02 -	76	1586	4	M16A	**CL561**	2	CP056	2	semidirect / pencil
1.6 4WD	04.02 -	78	1586	4	M16A	**CL561**	2	CP056	2	semidirect / pencil
1.6 4WD	01.05 - 12.07	79	1586	4	M16A	**CL561**	2	CP056	2	semidirect / pencil
1.6 i	04.02 -	78	1586	4	M16A	**CL561**	2	CP056	2	semidirect / pencil
Liana Combi (ER)										
1.3	07.01 - 12.07	66	1328	4	M13A	**CL561**	2	CP056	2	semidirect / pencil
1.6	07.01 - 12.07	76	1586	4	M16A	**CL561**	2	CP056	2	semidirect / pencil
1.6 4WD	07.01 - 12.07	76	1586	4	M16A	**CL561**	2	CP056	2	semidirect / pencil
1.6 4WD	04.02 - 12.07	78	1586	4	M16A	**CL561**	2	CP056	2	semidirect / pencil
1.6 4WD	01.05 - 12.07	79	1586	4	M16A	**CL561**	2	CP056	2	semidirect / pencil
1.6 i	04.02 - 12.07	78	1586	4	M16A	**CL561**	2	CP056	2	semidirect / pencil
Samurai (SJ)										
1.3 (SJ 413)	11.88 - 12.04	47	1324	4	G13A	**CL588**	1			
1.3 Allrad	01.00 - 12.04	59	1298	4	G13BA	**CL588**	1			
1.3 Allrad (SJ 413)	11.88 - 12.04	44	1324	4	G13A	**CL588**	1			
1.3 Allrad (SJ 413)	11.88 - 12.04	51	1298	4	G13BA	**CL588**	1			
Splash										
1.0	01.08 -	48	996	3	K10B	**CL236**	3			pencil
1.0	06.11 -	50	996	3	K10B	**CL236**	3			pencil
1.2	01.08 -	63	1242	4	K12B	**CL236**	4			pencil
1.2 VVT	09.10 -	69	1242	4	K12B	**CL236**	4			pencil
Swift Cabriolet (SF413)										
1.3 i	09.91 - 10.96	50	1298	4	G13BA	**CL561**	2	CP056	2	semidirect / pencil
Swift II CC (EA, MA)										
1.3 GTi	03.89 - 05.01	74	1298	4	G13B	**CL559**	1			
Swift III (MZ, EZ)										
1.3	02.05 -	68	1328	4	M13A	**CL561**	2	CP056	2	semidirect / pencil
1.3 4x4	01.06 -	66	1328	4	M13A	**CL561**	2	CP056	2	semidirect / pencil
1.3 4x4	02.05 -	68	1328	4	M13A	**CL561**	2	CP056	2	semidirect / pencil
1.5	02.05 -	75	1490	4	M15A	**CL561**	2	CP056	2	semidirect / pencil
1.6	05.06 -	92	1586	4	M16A	**CL561**	2	CP056	2	semidirect / pencil
SX4 (EY, GY)										
1.5	06.06 -	73	1490	4	M15A	**CL561**	2	CP056	2	semidirect / pencil
1.5 VVT	07.10 -	82	1490	4	M15A	**CL561**	2	CP056	2	semidirect / pencil
1.5 VVT 4x4	07.10 -	82	1490	4	M15A	**CL561**	2	CP056	2	semidirect / pencil
1.6 VVT	06.06 -	79	1586	4	M16A	**CL561**	2	CP056	2	semidirect / pencil
1.6 VVT	07.09 -	88	1586	4	M16A	**CL561**	2	CP056	2	semidirect / pencil
1.6 VVT 4x4	06.06 -	79	1586	4	M16A	**CL561**	2	CP056	2	semidirect / pencil
1.6 VVT 4x4	07.09 -	82	1586	4	M16A	**CL561**	2	CP056	2	semidirect / pencil
1.6 VVT 4x4	07.09 -	88	1586	4	M16A	**CL561**	2	CP056	2	semidirect / pencil
SX4 Sedan (GY)										
1.6	10.07 -	79	1586	4	M16A	**CL561**	2	CP056	2	semidirect / pencil
1.6 AWD	10.07 -	88	1586	4	M16A	**CL561**	2	CP056	2	semidirect / pencil
Vitara (ET, TA)										
1.6 i 16V Allrad (ET, TA)	07.90 - 03.98	71	1589	4	G16B	**CL588**	1			
2.0 16V Allrad (ET, TA)	12.96 - 03.98	97	1995	4	J20A	**CL557**	4	CP029	4	pencil
2.0 V6 24V Allrad (ET)	12.94 - 03.98	100	1998	6	H 20 A	**CL512**	6	CP029	6	pencil OEM No. 33410-77E11
						CL557	6	CP029	6	pencil OEM No. 33410-77E21
2.5 V6 24V Allrad (FT)	12.95 - 03.98	118	2493	6	H 25 A	**CL557**	6	CP029	6	pencil
Vitara Cabrio (ET, TA)										
1.6 i 16V	07.90 - 03.99	71	1589	4	G16B	**CL588**	1			
2.0 16V	12.96 - 03.99	97	1995	4	J20A	**CL557**	4	CP029	4	pencil

model	year	kW	cm³	cyl	engine	coil	pcs	boot	pcs	info
SUZUKI										
Wagon R+ (EM)										
1.0	02.98 - 05.00	48	996	4	K10A	**CL923**	4			pencil
Wagon R+ (MM)										
1.3	05.00 - 12.04	56	1298	4	G13BB	**CL561**	2	CP056	2	semidirect / pencil
1.3	09.03 -	69	1328	4	M13A	**CL561**	2	CP056	2	semidirect / pencil
1.3 4WD	10.01 -	56	1298	4	G13BB	**CL561**	2	CP056	2	semidirect / pencil
1.3 4WD	09.03 -	69	1328	4	M13A	**CL561**	2	CP056	2	semidirect / pencil
TAGAZ										
Road Partner										
2.3 4x4	01.08 -	110	2295	4		**CL606**	2	CP004	2	semidirect / pencil
3.2 4x4	01.08 -	162	3199	6		**CL606**	3	CP004	3	semidirect / pencil
Tager										
2.3	10.08 -	110	2295	4		**CL606**	2	CP004	2	semidirect / pencil
2.3 4x4	10.08 -	110	2295	4		**CL606**	2	CP004	2	semidirect / pencil
3.2 4x4	10.08 -	162	3199	6		**CL606**	3	CP004	3	semidirect / pencil
TOYOTA										
4 Runner (RN5_, LN5_, VZN6_, RN7_, RN6_)										
3.0 V6	08.91 - 11.95	105	2959	6	3VZ-E	**CL578**	1			
3.4 i	11.95 - 03.96	136	3378	6	5VZ-FE	**CL580**	3	CP030	3	semidirect / pencil
Auris (NRE15_, ZZE15_, ADE15_, ZRE15_, NDE15_)										
1.4 VVTi	03.07 -	71	1398	4	4ZZ-FE	**CL555**	4	CP042	4	pencil
1.6	05.09 -	97	1598	4	1ZR-FAE	**CL581**	4	CP043	4	pencil
1.6 VVTi	03.07 -	91	1598	4	1ZR-FE	**CL581**	4	CP043	4	pencil
1.8	02.09 -	108	1798	4	2ZR-FAE	**CL581**	4	CP043	4	pencil
Auris Touring Sports (ADE18_)										
1.6	07.13 -	97	1598	4	1ZR-FAE	**CL581**	4	CP043	4	pencil
Avensis (_T22_)										
1.6	09.97 - 10.00	74	1587	4	4A-FE	**CL513**	1			coil built in distributor
						CL514	1			coil 1xPIN
1.6	09.97 - 10.00	81	1587	4	4A-FE	**CL513**	1			coil built in distributor
						CL514	1			coil 1xPIN
1.6 VVT-i	10.00 - 02.03	81	1598	4	3ZZ-FE	**CL555**	4	CP042	4	pencil
1.8 VVT-i	10.00 - 02.03	95	1794	4	1ZZ-FE	**CL555**	4	CP042	4	pencil
2.0	09.97 - 10.00	94	1998	4	3S-FE	**CL919**	2			twin coil
2.0 VVT-i	10.00 - 02.03	110	1998	4	1AZ-FSE	**CL564**	4	CP041	4	pencil
Avensis (T25_)										
1.6 VVT-i	04.03 - 11.08	81	1598	4	3ZZ-FE	**CL555**	4	CP042	4	pencil
1.8	04.03 - 11.08	95	1794	4	1ZZ-FE	**CL555**	4	CP042	4	pencil
2.0	04.03 - 11.08	108	1998	4	1AZ-FSE	**CL564**	4	CP041	4	pencil
2.4	10.03 - 11.08	120	2362	4	2AZ-FSE	**CL564**	4	CP041	4	pencil
2.4	09.03 - 11.08	125	2362	4	2AZ-FSE	**CL564**	4	CP041	4	pencil
Avensis Combi (T25)										
1.6 VVT-i	04.03 - 11.08	81	1598	4	3ZZ-FE	**CL555**	4	CP042	4	pencil
1.8	04.03 - 11.08	95	1794	4	1ZZ-FE	**CL555**	4	CP042	4	pencil
2.0	04.03 - 12.09	108	1998	4	1AZ-FSE	**CL564**	4	CP041	4	pencil
2.4	10.03 - 11.08	120	2362	4	2AZ-FSE	**CL564**	4	CP041	4	pencil
2.4	09.03 - 11.08	125	2362	4	2AZ-FSE	**CL564**	4	CP041	4	pencil
Avensis Liftback (_T22_)										
1.6	09.97 - 10.00	74	1587	4	4A-FE	**CL513**	1			coil built in distributor
						CL514	1			coil 1xPIN
1.6	09.97 - 10.00	81	1587	4	4A-FE	**CL513**	1			coil built in distributor
						CL514	1			coil 1xPIN
1.6 VVT-i	10.00 - 02.03	81	1598	4	3ZZ-FE	**CL555**	4	CP042	4	pencil
1.8 VVT-i	10.00 - 02.03	95	1794	4	1ZZ-FE	**CL555**	4	CP042	4	pencil
2.0	09.97 - 10.00	94	1998	4	3S-FE	**CL919**	2			twin coil
2.0 VVT-i	10.00 - 02.03	110	1998	4	1AZ-FSE	**CL564**	4	CP041	4	pencil
Avensis Sedan (T25)										
1.6 VVT-i	04.03 - 11.08	81	1598	4	3ZZ-FE	**CL555**	4	CP042	4	pencil
1.8	04.03 - 11.08	95	1794	4	1ZZ-FE	**CL555**	4	CP042	4	pencil
2.0	04.03 - 11.08	108	1998	4	1AZ-FSE	**CL564**	4	CP041	4	pencil
2.4	10.03 - 11.08	120	2362	4	2AZ-FSE	**CL564**	4	CP041	4	pencil
2.4	09.03 - 11.08	125	2362	4	2AZ-FSE	**CL564**	4	CP041	4	pencil
Avensis Sedan (ZRT27, ADT27)										
1.6	11.08 -	97	1598	4	1ZR-FAE	**CL581**	4	CP043	4	pencil
1.8	11.08 -	108	1798	4	2ZR-FAE	**CL581**	4	CP043	4	pencil
2.0	11.08 -	112	1987	4	3ZR-FAE/3ZR-FE	**CL581**	4	CP043	4	pencil
Avensis Station Wagon (_T22_)										
1.6	09.97 - 10.00	74	1587	4	4A-FE	**CL513**	1			coil built in distributor
						CL514	1			coil 1xPIN
1.6	09.97 - 10.00	81	1587	4	4A-FE	**CL513**	1			coil built in distributor
						CL514	1			coil 1xPIN
1.6 VVT-i	10.00 - 02.03	81	1598	4	3ZZ-FE	**CL555**	4	CP042	4	pencil

TOYOTA Avensis Station Wagon (_T22_) ▶

model	year	kW	cm³	cyl	engine	coil	pcs	boot	pcs	info
TOYOTA										
Avensis Station Wagon (_T22_)										
1.8 VVT-i	10.00 - 02.03	95	1794	4	1ZZ-FE	**CL555**	4	CP042	4	pencil
2.0	09.97 - 10.00	94	1998	4	3S-FE	**CL919**	2			twin coil
2.0 VVT-i	10.00 - 02.03	110	1998	4	1AZ-FSE	**CL564**	4	CP041	4	pencil
Avensis Station Wagon (ZRT27, ADT27)										
1.6	02.09 -	97	1598	4	1ZR-FAE	**CL581**	4	CP043	4	pencil
1.8	02.09 -	108	1798	4	2ZR-FAE	**CL581**	4	CP043	4	pencil
2.0	02.09 -	112	1987	4	3ZR-FAE/3ZR-FE	**CL581**	4	CP043	4	pencil
Avensis Verso (_CLM2_, _ACM2_)										
2.0 VVT-i	08.01 - 11.09	110	1998	4	1AZ-FE	**CL579**	4	CP041	4	1st pencil / year
	09.05 - 11.09	110	1998	4	1AZ-FE	**CL564**	4	CP041	4	2nd pencil / year
Aygo (WNB1_, KGB1_)										
1.0	07.05 -	50	998	3	1KR-FE	**CL542**	3			pencil OEM No. 90080-19017
						CL555	3	CP042	3	pencil OEM No. 90080-19015
Camry (_CV1_, _XV1_, _V1_)										
2.2	06.91 - 08.96	100	2164	4	5S-FE	**CL568**	1			
3.0	06.91 - 08.96	138	2959	6	3VZ-FE	**CL578**	1			
Camry (_CV2_, _XV2_)										
2.2	11.00 - 11.01	93	2164	4	5S-FE	**CL919**	2			twin coil
2.2	08.96 - 11.01	96	2164	4	5S-FE	**CL919**	2			twin coil
3.0 24V	08.96 - 11.01	140	2995	6	1MZ-FE	**CL571**	6			pencil
								CP033	6	for different coil type
3.0 V6	08.96 - 11.01	135	2995	6	1MZ-FE	**CL571**	6			pencil
								CP033	6	for different coil type
Camry (MCV3_, ACV3_, _XV3_)										
2.4 VVT-i	11.01 - 11.06	112	2362	4	2AZ-FE	**CL579**	4	CP041	4	pencil
3.0 V6	11.01 - 11.06	137	2995	6	1MZ-FE	**CL571**	6	CP041	6	pencil
Camry Sedan (_XV4_)										
2.4 VVTi	01.06 - 09.11	116	2362	4	2AZ-FE	**CL579**	4	CP041	4	pencil
2.4 VVTi Hybrid	01.06 - 09.11	105	2362	4	2AZ-FXE	**CL579**	4	CP041	4	pencil
2.5 VVTi	01.10 - 09.11	129	2494	4	2AR-FE	**CL924**	4	CP041	4	pencil
Camry Sedan (AVV5_, XV5_)										
2.5	09.11 -	133	2494	4	2AR-FE	**CL924**	4	CP041	4	pencil
Camry Station Wagon (_XV1_, _CV1_, _V10)										
2.2	03.92 - 07.96	100	2164	4	5S-FE	**CL568**	1			
3.0	03.92 - 07.96	138	2959	6	3VZ-FE	**CL578**	1			
Carina II (_T17_)										
1.6	12.87 - 11.89	66	1587	4	4A-F	**CL513**	1			
Carina II Sedan (_T17_)										
1.6	12.87 - 08.90	66	1587	4	4A-F	**CL513**	1			
1.6	12.87 - 03.92	72	1587	4	4A-FE	**CL513**	1			
1.6	12.87 - 03.92	75	1587	4	4A-FE	**CL513**	1			
Carina II Station Wagon (_T17_)										
1.6	12.87 - 12.89	66	1587	4	4A-F	**CL513**	1			
Carina E (_T19_)										
1.6	12.93 - 09.97	73	1587	4	4A-FE	**CL513**	1			for distributor 4xDIN Ø5mm
						CL514	1			coil 1xPIN
1.6	12.93 - 09.97	85	1587	4	4A-FE	**CL513**	1			for distributor 4xDIN Ø5mm
						CL514	1			coil 1xPIN
1.6 16V	10.95 - 09.97	78	1587	4	4A-FE	**CL513**	1			for distributor 4xDIN Ø5mm
						CL514	1			coil 1xPIN
1.6 GLI	04.92 - 09.97	79	1587	4	4A-FE	**CL513**	1			for distributor 4xDIN Ø5mm
						CL514	1			coil 1xPIN
2.0 GLI	04.92 - 09.97	98	1998	4	3S-FE	**CL568**	1			
2.0 GTi	04.92 - 02.94	116	1998	4	3S-GE	**CL568**	1			
2.0 GTi 16V	03.94 - 09.97	129	1998	4	3S-GE	**CL568**	1			
2.0 i	12.93 - 09.97	93	1998	4	3S-FE	**CL568**	1			
Carina E Sedan (_T19_)										
1.6	01.95 - 09.97	73	1587	4	4A-FE	**CL513**	1			for distributor 4xDIN Ø5mm
						CL514	1			coil 1xPIN
1.6	10.95 - 09.97	78	1587	4	4A-FE	**CL513**	1			for distributor 4xDIN Ø5mm
						CL514	1			coil 1xPIN
1.6	01.93 - 09.97	79	1587	4	4A-FE	**CL513**	1			for distributor 4xDIN Ø5mm
						CL514	1			coil 1xPIN
1.6 16V	12.94 - 09.97	85	1587	4	4A-FE	**CL513**	1			for distributor 4xDIN Ø5mm
						CL514	1			coil 1xPIN
2.0	01.93 - 09.97	98	1998	4	3S-FE	**CL568**	1			
2.0 GTi	04.92 - 02.94	116	1998	4	3S-GE	**CL568**	1			
2.0 GTi 16V	03.94 - 09.97	129	1998	4	3S-GE	**CL568**	1			
2.0 i	12.92 - 09.97	93	1998	4	3S-FE	**CL568**	1			
Carina E Sportswagon (_T19_)										
1.6 GLI	01.93 - 09.97	79	1587	4	4A-FE	**CL513**	1			

TOYOTA Carina E Sportswagon (_T19_)

model	year	kW	cm³	cyl	engine	coil	pcs	boot	pcs	info
TOYOTA										
Carina E Sportswagon (_T19_)										
1.6 i	02.95 - 09.97	73	1587	4	4A-FE	**CL513**	1			for distributor 4xDIN Ø5mm
						CL514	1			coil 1xPIN
2.0 GLI	01.93 - 09.97	98	1998	4	3S-FE	**CL568**	1			
2.0 i	05.95 - 09.97	93	1998	4	3S-FE	**CL568**	1			
Celica (AT16_, ST16_)										
1.6	04.86 - 08.89	63	1588	4	4A-L	**CL513**	1			
Celica (ST20_, AT20_)										
1.8 i 16V	11.93 - 11.99	85	1762	4	7A-FE	**CL513**	1			
2.0 i 16V	04.96 - 11.99	125	1998	4	3S-GE	**CL578**	1			
2.0 i 16V	11.93 - 11.99	129	1998	4	3S-GE	**CL578**	1			
Celica (ZZT23_)										
1.8 16V TS	08.99 - 09.05	141	1796	4	2ZZ-GE	**CL577**	4			pencil
1.8 16V VT-i	08.99 - 07.05	105	1794	4	1ZZ-FE	**CL555**	4	CP042	4	pencil
Celica Cabriolet (AT18_, ST18_)										
2.0 GTi	10.89 - 11.93	115	1998	4	3S-GE	**CL578**	1			
Celica Cabriolet (AT20_, ST20_)										
2.0 i 16V	11.93 - 08.99	125	1998	4	3S-GE	**CL578**	1			
Celica Coupe (AT18_, ST18_)										
2.0 GTi	09.91 - 11.93	115	1998	4	3S-GE	**CL578**	1			
2.0 Turbo 4WD	10.89 - 11.93	150	1998	4	3S-GTE	**CL578**	1			
2.0 Turbo 4WD	10.89 - 11.93	153	1998	4	3S-GTE	**CL578**	1			
Celica Liftback (ST16_, AT16_)										
1.6	04.86 - 08.89	63	1588	4	4A-L	**CL513**	1			
Corolla (_E8_)										
1.3	10.84 - 08.87	55	1295	4	2E-LC/2E-L	**CL513**	1			
1.6	08.85 - 08.87	53	1587	4	4A-LC	**CL513**	1			
1.6	12.85 - 05.88	54	1587	4	4A-LC	**CL513**	1			
1.6	06.83 - 08.87	62	1588	4	4A-L	**CL513**	1			
Corolla (_E9_)										
1.3 i	08.87 - 12.92	55	1296	4	2E-E/2E	**CL513**	1			
1.6	08.87 - 12.89	66	1587	4	4A-F	**CL513**	1			
Corolla (_E10_)										
1.3 12V	07.92 - 04.97	53	1296	4	2E	**CL513**	1			
1.3 XLI	09.95 - 04.97	55	1332	4	4E-FE	**CL513**	1			
1.3 XLI 16V	07.92 - 09.95	65	1332	4	4E-FE	**CL513**	1			
1.6 Si	09.95 - 04.97	84	1587	4	4A-FE	**CL513**	1			
Corolla (_E11_)										
1.4	04.97 - 02.00	63	1332	4	4E-FE	**CL513**	1			
1.4 16V	02.00 - 11.01	71	1398	4	4ZZ-FE	**CL542**	4			pencil
1.6 16V	02.00 - 11.01	81	1598	4	3ZZ-FE	**CL555**	4	CP042	4	pencil
1.6 Aut.	04.97 - 02.00	79	1587	4	4A-FE	**CL513**	1			
Corolla (ZZE12_, NDE12_, ZDE12_)										
1.4 VVT-i	01.02 - 12.06	71	1398	4	4ZZ-FE	**CL555**	4	CP042	4	pencil
1.6 VVT-i	01.02 - 12.06	81	1598	4	3ZZ-FE	**CL555**	4	CP042	4	pencil
1.8 VVTL-i TS	01.02 - 02.07	141	1796	4	2ZZ-GE	**CL577**	4			pencil
1.8 VVTL-i TS	10.05 - 12.06	160	1796	4	2ZZ-GE	**CL577**	4			pencil
1.8 VVTL-i TS	02.05 - 02.07	165	1796	4	2ZZ-GE	**CL577**	4			pencil
Corolla Combi (_E12J_, _E12T_)										
1.4 VVT-i	01.02 - 02.07	71	1398	4	4ZZ-FE	**CL555**	4	CP042	4	pencil
1.6 VVT-i	01.02 - 02.07	81	1598	4	3ZZ-FE	**CL555**	4	CP042	4	pencil
Corolla Compact (_E9_)										
1.3	08.87 - 12.89	55	1296	4	2E	**CL513**	1			
1.6	08.87 - 04.92	66	1587	4	4A-F	**CL513**	1			
Corolla Compact (_E10_)										
1.3 12V	07.92 - 05.95	53	1296	4	2E	**CL513**	1			
1.3 XLI	09.95 - 04.97	55	1332	4	4E-FE	**CL513**	1			
1.3 XLI 16V	07.92 - 09.95	65	1332	4	4E-FE	**CL513**	1			
1.6 Si	07.92 - 04.97	84	1587	4	4A-FE	**CL513**	1			
1.8 GT	11.92 - 05.95	86	1762	4	7A-FE	**CL513**	1			
1.8 GTi 4WD	11.92 - 04.95	81	1762	4	7A-FE	**CL513**	1			
Corolla Compact (_E11_)										
1.4	04.97 - 02.00	63	1332	4	4E-FE	**CL513**	1			
1.4	02.00 - 01.02	71	1398	4	4ZZ-FE	**CL542**	4			pencil
1.6	04.97 - 02.00	81	1587	4	4A-FE	**CL513**	1			
1.6	02.00 - 01.02	81	1598	4	3ZZ-FE	**CL555**	4	CP042	4	pencil
1.6 Aut.	04.97 - 02.00	79	1587	4	4A-FE	**CL513**	1			
Corolla FX Compact (E8B)										
1.3	08.85 - 08.87	55	1295	4	2E-L	**CL513**	1			
Corolla Liftback (_E8_)										
1.3	01.85 - 08.87	55	1296	4	2E-LC/2E-L	**CL513**	1			
1.6	08.85 - 08.87	54	1587	4	4A-LC	**CL513**	1			

TOYOTA Corolla Liftback (_E8_) ▶

model	year	kW	cm³	cyl	engine	coil	pcs	boot	pcs	info
TOYOTA										
Corolla Liftback (_E8_)										
1.6	06.83 - 08.87	62	1588	4	4A-L	**CL513**	1			
1.6	07.85 - 05.88	63	1587	4	4A-L	**CL513**	1			
Corolla Liftback (_E9_)										
1.3 i	08.87 - 04.92	55	1296	4	2E-E/2E	**CL513**	1			
1.6	08.87 - 04.92	66	1587	4	4A-F	**CL513**	1			
Corolla Liftback (_E10_)										
1.3 12V	07.92 - 05.95	53	1296	4	2E	**CL513**	1			
1.3 XLI	07.92 - 04.97	65	1332	4	4E-FE	**CL513**	1			
1.6 GLI	07.92 - 04.97	84	1587	4	4A-FE	**CL513**	1			
1.8 GT	11.92 - 05.95	86	1762	4	7A-FE	**CL513**	1			
Corolla Liftback (_E11_)										
1.4	04.97 - 02.00	63	1332	4	4E-FE	**CL513**	1			
1.4	02.00 - 01.02	71	1398	4	4ZZ-FE	**CL542**	4			pencil
1.6	04.97 - 02.00	81	1587	4	4A-FE	**CL513**	1			
1.6	02.00 - 01.02	81	1598	4	3ZZ-FE	**CL555**	4	CP042	4	pencil
1.6 Aut.	04.97 - 02.00	79	1587	4	4A-FE	**CL513**	1			
Corolla Sedan (_E12J_, _E12T_)										
1.4 VVT-i	08.02 - 07.07	71	1398	4	4ZZ-FE	**CL555**	4	CP042	4	pencil
1.6 VVT-i	08.02 - 07.07	81	1598	4	3ZZ-FE	**CL555**	4	CP042	4	pencil
Corolla Sedan (E15_)										
1.33	01.07 -	74	1329	4	1NR-FE	**CL924**	4	CP041	4	pencil
Corolla Sedan (NRE18_, ZRE17_, ZRE18_, NDE18_)										
1.6	06.13 -	97	1598	4	1ZR-FAE	**CL581**	4	CP043	4	pencil
1.6 BiFuel	06.13 -	90	1598	4	1ZR-FE	**CL581**	4	CP043	4	pencil
Corolla Station Wagon (_E9_)										
1.3	12.87 - 06.92	55	1296	4	2E	**CL513**	1			
1.6	02.88 - 05.92	66	1587	4	4A-F	**CL513**	1			
1.6	12.87 - 04.92	70	1587	4	4A-F	**CL513**	1			
Corolla Station Wagon (NKE16_, NZE16_)										
1.5 Hybrid	10.14 -	54	1496	4	1NZ-FXE	**CL520**	4	CP042	4	pencil
Corolla Verso (ZDE12_, CDE12_)										
1.6 VVT-i	01.02 - 05.04	81	1598	4	3ZZ-FE	**CL555**	4	CP042	4	pencil
1.8 VVT-i	01.02 - 05.04	99	1794	4	1ZZ-FE	**CL555**	4	CP042	4	pencil
1.8 VVTi 4WD	10.01 - 02.04	99	1794	4	1ZZ-FE	**CL555**	4	CP042	4	pencil
Corolla Verso (ZER_, ZZE12_, R1_)										
1.6	04.04 - 03.09	81	1598	4	3ZZ-FE	**CL555**	4	CP042	4	pencil
1.8	04.04 - 03.09	95	1794	4	1ZZ-FE	**CL555**	4	CP042	4	pencil
Corolla Wagon (_E10_)										
1.3 12V	07.92 - 05.95	53	1296	4	2E	**CL513**	1			
1.3 XLI	09.95 - 04.97	55	1332	4	4E-FE	**CL513**	1			
1.3 XLI 16V	07.92 - 09.95	65	1332	4	4E-FE	**CL513**	1			
1.6 Si	07.92 - 04.97	84	1587	4	4A-FE	**CL513**	1			
1.8 16V 4WD	09.95 - 04.97	81	1762	4	7A-FE	**CL513**	1			
Corolla Wagon (__E11_)										
1.4	04.97 - 02.00	63	1332	4	4E-FE	**CL513**	1			
1.4 16V	02.00 - 10.01	71	1398	4	4ZZ-FE	**CL542**	4			pencil
1.6	04.97 - 02.00	81	1587	4	4A-FE	**CL513**	1			
1.6 16V	02.00 - 10.01	81	1598	4	3ZZ-FE	**CL555**	4	CP042	4	pencil
1.6 Aut.	04.97 - 02.00	79	1587	4	4A-FE	**CL513**	1			
Hiace III Van (YH7_, LH6_, LH7_, LH5_, YH5_, YH6_)										
2.0	02.90 - 08.95	74	1998	4	1RZ	**CL513**	1			
2.4	08.89 - 08.95	88	2438	4	2RZ-E	**CL513**	1			
2.4 4WD	08.89 - 08.95	88	2438	4	2RZ-E	**CL513**	1			
Hiace III Wagon (LH1_, RZH1_)										
2.0	08.89 - 04.98	74	1998	4	1RZ	**CL513**	1			
2.4	08.89 - 08.95	88	2438	4	2RZ-E	**CL513**	1			
2.4 4WD	08.89 - 08.95	88	2438	4	2RZ-E	**CL513**	1			
Hiace IV Bus (LH1_)										
2.4	08.95 - 04.98	85	2438	4	2RZ-E	**CL513**	1			
2.4 4WD	08.95 - 04.98	85	2438	4	2RZ-E	**CL513**	1			
2.7	04.98 - 08.01	105	2694	4	3RZ-FE	**CL919**	2			year / twin coil
	09.01 - 11.01	105	2694	4	3RZ-FE	**CL576**	4	CP042	4	year / pencil
2.7	11.01 - 08.06	106	2694	4	3RZ-FE	**CL576**	4	CP042	4	pencil
						CL919	2			twin coil
2.7 4WD	04.98 - 08.01	105	2694	4	3RZ-FE	**CL919**	2			year / twin coil
	09.01 - 08.06	105	2694	4	3RZ-FE	**CL576**	4	CP042	4	year / pencil
Hiace IV Van (LXH1_, RZH1_, LH1_)										
2.4	08.95 - 02.05	85	2438	4	2RZ-E	**CL513**	1			
2.4 4WD	08.95 - 04.98	85	2438	4	2RZ-E	**CL513**	1			
2.7	04.98 - 08.01	105	2694	4	3RZ-FE	**CL919**	2			year / twin coil
	09.01 - 08.06	105	2694	4	3RZ-FE	**CL576**	4	CP042	4	year / pencil

TOYOTA Hiace IV Van ▶

model	year	kW	cm³	cyl	engine	coil	pcs	boot	pcs	info
TOYOTA										
Hiace IV Van (LXH1_, RZH1_, LH1_)										
2.7 4WD	04.98 - 08.01	106	2694	4	3RZ-FE	**CL919**	2			year / twin coil
	09.01 -	106	2694	4	3RZ-FE	**CL576**	4	CP042	4	year / pencil
Hilux II Pick-up (RN6_, RN5_, LN6_, YN6_, YN5_, LN5_)										
2.4 i 4WD	06.89 - 07.05	84	2366	4	22RE	**CL568**	1			
2.4 i 4WD	08.97 - 07.05	103	2438	4	2RZ-FE	**CL919**	2			twin coil
IQ (KPJ1_, NGJ1_, KGJ1_, NUJ1_)										
1.0	01.09 -	50	998	3	1KR-FE	**CL520**	3	CP042	3	pencil
1.33	01.09 -	72	1329	4	1NR-FE	**CL924**	4	CP041	4	pencil
Land Cruiser (KDJ12_, GRJ12_)										
2.7	09.02 - 08.04	112	2694	4	3RZ-FE	**CL576**	4	CP042	4	pencil
4.0	01.03 -	183	3956	6	1GR-FE	**CL564**	6	CP041	6	pencil
Land Cruiser (VDJ20_, UZJ20_)										
4.6 V8	09.10 -	227	4608	8	1UR-FE	**CL924**	8	CP041	8	pencil
4.6 V8	01.12 -	234	4608	8	1UR-FE	**CL924**	8			pencil
4.7 V8	01.08 -	212	4664	8	2UZ-FE	**CL575**	8	CP041	8	pencil
Land Cruiser 80 (_J8_)										
4.0	01.90 - 08.92	115	3956	6	3F-E	**CL574**	6			
Land Cruiser 90 (_J9_)										
3.4 i 24V	04.96 -	131	3378	6	5VZ-FE	**CL580**	3	CP030	3	semidirect / pencil
Land Cruiser 100 (UZJ100)										
4.7	01.98 -	173	4664	8	2UZ-FE	**CL575**	8	CP041	8	pencil
4.7	02.02 -	175	4664	8	2UZ-FE	**CL575**	8	CP041	8	pencil
Land Cruiser 150 (KDJ15_, GRJ15_)										
4.0 V6 Dual VVTi	01.10 -	205	3956	6	1GR-FE	**CL924**	6	CP041	6	pencil
4.0 V6 VVT-i	01.10 -	207	3956	6	1GR-FE	**CL924**	6	CP041	6	pencil
Liteace Bus (CM30_G, KM30_G)										
1.5	10.85 - 08.89	51	1486	4	5K	**CL578**	1			
1.5	07.89 - 01.92	52	1486	4	5K	**CL578**	1			
Liteace Bus (_R2_LG)										
1.5	01.92 - 01.95	52	1486	4	5K	**CL578**	1			
Liteace Van (_R2__V)										
1.5	01.92 - 01.95	52	1486	4	5K	**CL578**	1			
Liteace Van (CM3_V, KM3_V)										
1.5	05.86 - 09.91	51	1486	4	5K	**CL578**	1			
Mark X I (GRX12_)										
2.5 VVTi	03.04 - 09.09	158	2499	6	4GR-FSE	**CL924**	6	CP041	6	pencil
2.5 VVTi 4WD	05.04 - 09.09	158	2499	6	4GR-FSE	**CL924**	6	CP041	6	pencil
3.0 VVTi	05.04 - 09.09	183	2995	6	3GR-FSE	**CL924**	6	CP041	6	pencil
MR 2 II (SW2_)										
2.0 16V	12.89 - 12.91	115	1998	4	3S-GE	**CL574**	1			year
	12.91 - 05.00	115	1998	4	3S-GE	**CL578**	1			year
2.0 16V	12.89 - 12.91	125	1998	4	3S-GE	**CL574**	1			year
	12.91 - 05.00	125	1998	4	3S-GE	**CL578**	1			year
2.0 16V	12.89 - 12.91	129	1998	4	3S-GE	**CL574**	1			year
	12.91 - 05.00	129	1998	4	3S-GE	**CL578**	1			year
MR 2 III (ZZW3_)										
1.8 16V VT-i	10.99 - 06.07	103	1794	4	1ZZ-FE	**CL555**	4	CP042	4	pencil
Paseo Cabriolet (EL54)										
1.5	10.96 - 01.98	66	1497	4	5E-FE			CP031	4	for pencil coil
Paseo Coupe (EL54)										
1.5 16V	08.95 - 07.99	66	1497	4	5E-FE			CP031	4	for pencil coil
Picnic (_XM10)										
2.0	01.01 - 12.01	90	1998	4	3S-FE	**CL919**	2			twin coil
2.0 16V	05.96 - 12.01	94	1998	4	3S-FE	**CL919**	2			twin coil
Previa (MCR3_, ACR3_, CLR3_)										
2.4	08.00 - 01.06	115	2362	4	2AZ-FE	**CL579**	4	CP041	4	pencil
Prius Liftback (NHW20_)										
1.5	08.03 - 03.09	57	1497	4	1NZ-FXE	**CL520**	4	CP042	4	pencil
Prius Sedan (NHW11_)										
1.5 Hybrid	05.00 - 01.04	53	1497	4	1NZ-FXE	**CL520**	4	CP042	4	pencil
Prius C (NHP10_)										
1.5 Hybrid	02.12 -	54	1497	4	1NZ-FXE	**CL520**	4	CP042	4	pencil
RAV 4 I (SXA1_)										
2.0 4WD	06.94 - 06.00	95	1998	4	3S-FE	**CL568**	1			
RAV 4 I Cabrio (SXA1_)										
2.0 16V 4WD	12.97 - 06.00	94	1998	4	3S-FE	**CL568**	1			
RAV 4 II (CLA2_, XA2_, ZCA2_, ACA2_)										
1.8 VVTi	08.00 - 11.05	92	1794	4	1ZZ-FE	**CL555**	4	CP042	4	pencil
2.0 VVTi 4WD	06.00 - 11.05	110	1998	4	1AZ-FE	**CL579**	4	CP041	4	pencil
RAV 4 III (ACA3_, ACE_, ALA3_, GSA3_, ZSA3_)										
2.0	12.08 -	116	1987	4	3ZR-FAE	**CL581**	4	CP043	4	pencil

TOYOTA RAV 4 III

model	year	kW	cm³	cyl	engine	coil	pcs	boot	pcs	info
TOYOTA										
RAV 4 III (ACA3_, ACE_, ALA3_, GSA3_, ZSA3_)										
2.0 4WD	12.08 -	116	1987	4	3ZR-FAE	**CL581**	4	CP043	4	pencil
2.0 VVT-i 4WD	03.06 -	112	1998	4	1AZ-FE	**CL579**	4	CP041	4	pencil
Starlet (_P7_)										
1.3	10.84 - 12.89	55	1295	4	2E-LC	**CL513**	1			
Starlet (_P8_)										
1.0	12.89 - 12.92	40	999	4	1E	**CL513**	1			
1.3 12V	12.89 - 12.92	55	1296	4	2E-E/2E	**CL513**	1			
1.3 12V cat	12.89 - 03.96	55	1296	4	2E-E	**CL513**	1			
Starlet (EP91)										
1.3	04.96 - 03.99	55	1332	4	4E-FE	**CL513**	1			
Urban Cruiser (NSP1_, NLP1_, ZSP1_, NCP11_)										
1.33	04.10 -	73	1329	4	1NR-FE	**CL924**	4	CP041	4	pencil
1.33	04.09 -	74	1329	4	1NR-FE	**CL924**	4	CP041	4	pencil
Verso (_AUR2_, _ZGR2_)										
1.6	04.09 -	97	1598	4	1ZR-FAE	**CL581**	4	CP043	4	pencil
1.8	04.09 -	108	1798	4	2ZR-FAE	**CL581**	4	CP043	4	pencil
Verso S (NLP12_, NCP12_, NSP12_)										
1.33	11.10 -	70	1329	4	1NR-FE	**CL924**	4	CP041	4	pencil
1.33	11.10 -	73	1329	4	1NR-FE	**CL924**	4	CP041	4	pencil
Yaris (SCP1_, NLP1_, NCP1_)										
1.0 16V	03.03 - 09.05	48	998	4	1SZ-FE	**CL520**	4	CP042	4	pencil
1.0 16V	04.99 - 09.05	50	998	4	1SZ-FE	**CL520**	4	CP042	4	pencil
1.3	04.02 - 09.05	64	1298	4	2SZ-FE	**CL520**	4	CP042	4	pencil
1.3 16V	11.99 - 09.05	63	1299	4	2NZ-FE	**CL520**	4	CP042	4	pencil
1.5 TS	01.03 - 09.05	77	1497	4	1NZ-FE	**CL520**	4	CP042	4	pencil
1.5 VVT-i TS	04.01 - 09.05	78	1497	4	1NZ-FE	**CL520**	4	CP042	4	pencil
1.5 VVT-i TS	03.03 - 07.05	110	1497	4	1NZ-FE	**CL520**	4	CP042	4	pencil
Yaris (SCP9_, NSP9_, KSP9_, NCP9_, ZSP9_)										
1.0 VVT-i	08.05 -	51	998	3	1KR-FE	**CL542**	3			pencil OEM No. 90080-19017
						CL555	3	CP042	3	pencil OEM No. 90080-19015
1.3 VVT-i	08.05 -	64	1298	4	2NZ-FE/2SZ-FE	**CL520**	4	CP042	4	pencil
1.33 VVT-i	07.10 -	73	1329	4	1NR-FE	**CL520**	4	CP042	4	pencil
1.33 VVT-i	03.09 -	74	1329	4	1NR-FE	**CL520**	4	CP042	4	pencil
1.8 VVTi	01.07 -	98	1798	4	2ZR-FE	**CL581**	4	CP043	4	pencil
Yaris (NHP13_, NSP13_, NCP13_, KSP13_, NLP13_)										
1.0	09.11 -	51	998	3	1KR-FE	**CL555**	3	CP042	3	pencil
1.3	09.11 -	70	1329	4	1NR-FE	**CL924**	4	CP041	4	pencil
1.3	09.11 -	73	1329	4	1NR-FKE/1NR-FE	**CL924**	4	CP041	4	pencil
Yaris Verso (_NLP2_, _NCP2_)										
1.3	11.02 - 09.05	62	1299	4	2NZ-FE	**CL520**	4	CP042	4	pencil
1.3	08.99 - 10.02	63	1299	4	2NZ-FE	**CL520**	4	CP042	4	pencil
1.5	05.03 - 09.05	77	1497	4	1NZ-FE	**CL520**	4	CP042	4	pencil
1.5	03.00 - 09.05	78	1497	4	1NZ-FE	**CL520**	4	CP042	4	pencil
1.5 4WD	03.00 - 09.05	78	1497	4	1NZ-FE	**CL520**	4	CP042	4	pencil
VOLVO										
340-360 (343, 345)										
1.4	08.82 - 08.85	46	1397	4	B 14.3 E	**CL118**	1			
1.4	08.86 - 12.88	50	1397	4	B 14.4 S	**CL118**	1			
1.4	08.87 - 07.88	51	1397	4	B 14.4 S	**CL118**	1			
1.7	08.85 - 07.91	59	1721	4	B 17 2 K	**CL118**	1			
2.0	08.84 - 07.87	77	1986	4	B 200 K	**CL118**	1			
2.0	08.88 - 07.89	80	1986	4	B 200 F	**CL118**	1			
2.0	08.87 - 07.88	81	1986	4	B 200 F	**CL118**	1			
2.0	08.86 - 07.88	82	1986	4	B 200 E/B 200 F	**CL118**	1			
2.0	08.84 - 07.86	87	1986	4	B 200 E	**CL118**	1			
340-360 Sedan (344)										
1.4	08.87 - 07.88	51	1397	4	B 14.4 S	**CL118**	1			
1.7	08.85 - 07.91	59	1721	4	B 17 2 K	**CL118**	1			
2.0	08.84 - 07.90	75	1986	4	B 200 K	**CL118**	1			
2.0	08.84 - 07.87	77	1986	4	B 200 K	**CL118**	1			
2.0	08.87 - 07.88	81	1986	4	B 200 EA	**CL118**	1			
2.0	08.86 - 07.88	82	1986	4	B 200 EA	**CL118**	1			
2.0	08.84 - 07.86	85	1986	4	B 200 E	**CL118**	1			
2.0	08.84 - 07.86	87	1986	4	B 200 E	**CL118**	1			
440 K (445)										
1.6	09.88 - 12.96	61	1596	4	B 16 F	**CL118**	1			
1.7	09.88 - 12.96	64	1721	4	B 18 KP	**CL118**	1			
1.7	08.88 - 07.89	70	1721	4	B 18 F	**CL118**	1			
1.7	08.89 - 12.96	75	1721	4	B 18 FP	**CL118**	1			
1.7	09.88 - 12.96	78	1721	4	B 18 EP	**CL118**	1			
1.8	08.91 - 07.96	66	1794	4	B 18 U	**CL118**	1			

VOLVO 440 K (445) ▶

model	year	kW	cm³	cyl	engine	coil	pcs	boot	pcs	info
VOLVO										
440 K (445)										
1.8	09.95 - 12.96	66	1794	4	B 18 U	**CL118**	1			
2.0	08.93 - 07.96	80	1998	4	B 20 F	**CL118**	1			
2.0	08.92 - 07.95	81	1998	4	B 20 F	**CL118**	1			
460 L (464)										
1.6	07.92 - 07.96	61	1596	4	B 16 F	**CL118**	1			
1.7	09.88 - 07.96	64	1721	4	B 18 KP	**CL118**	1			
1.7	08.89 - 07.92	75	1721	4	B 18 EP	**CL118**	1			
1.8	08.91 - 07.96	66	1794	4	B 18 U	**CL118**	1			
2.0	08.93 - 07.96	80	1998	4	B 20 F	**CL118**	1			
2.0	08.92 - 07.95	81	1998	4	B 20 F	**CL118**	1			
480 E										
1.7	08.87 - 07.89	70	1721	4	B 18 F	**CL118**	1			
1.7	08.89 - 07.96	75	1721	4	B 18 EP	**CL118**	1			
1.7	04.86 - 07.89	78	1721	4	B 18 E	**CL118**	1			
1.7	08.86 - 07.88	80	1721	4	B 18 E	**CL118**	1			
2.0	08.92 - 09.95	81	1998	4	B 20 F	**CL118**	1			
850 (LS)										
2.0	08.94 - 12.96	93	1984	5	B 5202 S	**CL119**	1			
2.0	06.91 - 12.96	105	1984	5	B 5204 F	**CL119**	1			
2.0 Turbo	08.93 - 12.96	155	1984	5	B 5204 T/B 5204 FT	**CL119**	1			
2.3 T5	08.93 - 07.96	166	2319	5	B 5234 FT	**CL119**	1			
2.3 T5-R	08.95 - 12.96	184	2319	5	B 5234 T4	**CL119**	1			
2.5	06.91 - 07.94	103	2435	5	B 5252	**CL119**	1			
2.5	08.94 - 12.96	106	2435	5	B 5252 FS	**CL119**	1			
2.5	08.91 - 12.96	125	2435	5	B 5254 S	**CL119**	1			
850 Combi (LW)										
2.0	08.94 - 12.96	93	1984	5	B 5202 S	**CL119**	1			
2.0	02.93 - 12.96	105	1984	5	B 5204 F	**CL119**	1			
2.0 Turbo	02.93 - 12.96	155	1984	5	B 5204 T/B 5204 FT	**CL119**	1			
2.3 T5	02.93 - 12.96	166	2319	5	B 5234 FT	**CL119**	1			
2.3 T5-R	08.95 - 12.96	184	2319	5	B 5234 T4	**CL119**	1			
2.5	08.92 - 07.94	103	2435	5	B 5252	**CL119**	1			
2.5	08.94 - 12.96	106	2435	5	B 5252 FS	**CL119**	1			
2.5	09.92 - 12.96	125	2435	5	B 5254 S	**CL119**	1			
2.5 AWD	04.96 - 12.96	142	2435	5	B 5254 T	**CL119**	1			
940 (944)										
2.0 Turbo	08.90 - 12.94	114	1986	4	B 200 FT	**CL719**	4			pencil
940 II (944)										
2.0 Turbo	04.96 - 10.98	114	1986	4	B 200 FT	**CL719**	4			pencil
940 II Combi (945)										
2.0 Turbo	04.96 - 10.98	114	1986	4	B 200 FT	**CL719**	4			pencil
960 (964)										
2.9	08.90 - 07.94	150	2922	6	B 6304 F/B 6304 G	**CL719**	6			pencil
960 Combi (965)										
2.9	08.90 - 07.94	150	2922	6	B 6304 F/B 6304 S	**CL719**	6			pencil
960 II (964)										
2.5	07.94 - 12.96	125	2473	6	B 6254 S	**CL719**	6			pencil
2.9	07.94 - 12.96	150	2922	6	B 6304 S	**CL719**	6			pencil
960 II Combi (965)										
2.5	08.94 - 12.96	125	2473	6	B 6254 S	**CL719**	6			pencil
2.9	09.94 - 12.96	150	2922	6	B 6304 S	**CL719**	6			pencil
C30										
1.6	10.06 - 12.12	74	1596	4	B 4164 S3	**CL403**	1			
1.8	10.06 - 12.12	92	1798	4	B 4184 S11	**CL405**	4	CP048	4	pencil
1.8 FlexFuel	01.07 - 12.12	92	1798	4	B 4184 S8	**CL405**	4	CP048	4	pencil
2.0	10.06 - 12.12	107	1999	4	B 4204 S3	**CL405**	4	CP048	4	pencil
2.0 FlexFuel	01.10 - 12.12	107	1999	4	B 4204 S4	**CL405**	4	CP048	4	pencil
2.4 i	10.06 - 12.12	125	2435	5	B 5244 S4	**CL410**	5	CP035	5	pencil
2.5 T5	10.06 - 12.12	162	2521	5	B 5254 T3	**CL410**	5	CP035	5	pencil
2.5 T5	03.07 - 12.12	169	2521	5	B 5254 T7	**CL410**	5	CP035	5	pencil
C70 I Cabriolet										
2.0	03.98 - 10.05	132	1984	5	B 5204 T2	**CL119**	1			
2.0 T	03.00 - 10.05	120	1984	5	B 5204 T4	**CL121**	5	CP034	5	pencil
2.0 T	03.98 - 08.98	166	1984	5	B 5204 T3	**CL119**	1			year / with distributor
	08.98 - 10.05	166	1984	5	B 5204 T3	**CL121**	5	CP034	5	year / pencil
2.3 T5	03.98 - 08.98	176	2319	5	B 5234 T3	**CL119**	1			year / with distributor
	08.98 - 10.05	176	2319	5	B 5234 T3	**CL121**	5	CP034	5	year / pencil
2.3 T5	07.02 - 10.05	180	2319	5	B 5234 T9	**CL121**	5	CP034	5	pencil
2.4 T	07.02 - 10.05	147	2435	5	B 5244 T7	**CL121**	5	CP034	5	pencil
2.5	06.98 - 10.05	125	2435	5	B 5254 S	**CL121**	5	CP034	5	pencil

VOLVO C70 I Cabriolet ▶

model	year	kW	cm³	cyl	engine	coil	pcs	boot	pcs	info
VOLVO										
C70 I Cabriolet										
2.5 T	03.98 - 08.98	142	2435	5	B 5254 T	**CL119**	1			year / with distributor
	08.98 - 10.05	142	2435	5	B 5254 T/B 5244 T	**CL121**	5	CP034	5	year / pencil
C70 I Coupe										
2.0	03.97 - 09.02	132	1984	5	B 5204 T2	**CL119**	1			
2.0 T	03.00 - 09.02	120	1984	5	B 5204 T4	**CL121**	5	CP034	5	pencil
2.0 T	03.97 - 07.98	166	1984	5	B 5204 T3	**CL119**	1			year / with distributor
	08.98 - 09.02	166	1984	5	B 5204 T3	**CL121**	5	CP034	5	year / pencil
2.3 T-5	03.97 - 07.98	176	2319	5	B 5234 T3	**CL119**	1			year / with distributor
	08.98 - 09.02	176	2319	5	B 5234 T3	**CL121**	5	CP034	5	year / pencil
2.5	03.99 - 09.02	121	2435	5	B 5254 S	**CL121**	5	CP034	5	pencil
2.5	05.99 - 09.02	125	2435	5	B 5244 S/B 5254 S	**CL121**	5	CP034	5	pencil
2.5 T	03.97 - 09.02	142	2435	5	B 5254 T	**CL119**	1			
C70 II Cabriolet										
2.4	03.06 -	103	2435	5	B 5244 S5	**CL410**	5	CP035	5	pencil
2.4 i	03.06 -	125	2435	5	B 5244 S4	**CL410**	5	CP035	5	pencil
2.5 T5	03.06 -	162	2521	5	B 5254 T3	**CL410**	5	CP035	5	pencil
2.5 T5	03.07 -	169	2521	5	B 5254 T7	**CL410**	5	CP035	5	pencil
S40 I (VS)										
1.6	09.95 - 08.99	77	1588	4	B 4164 S	**CL136**	1			twin coil / for cyl 1-4
						CL137	1			twin coil / for cyl 2-3
1.6	03.99 - 12.03	80	1587	4	B 4164 S2	**CL136**	1			twin coil / for cyl 1-4
						CL137	1			twin coil / for cyl 2-3
						CL707	2			semidirect / pencil
1.8	07.95 - 08.99	85	1731	4	B 4184 S3/B 4184 S	**CL136**	1			twin coil / for cyl 1-4
						CL137	1			twin coil / for cyl 2-3
						CL707	2			semidirect / pencil
1.8	03.99 - 12.03	90	1783	4	B 4184 S2/B 4184 S9	**CL136**	1			twin coil / for cyl 1-4
						CL137	1			twin coil / for cyl 2-3
						CL707	2			semidirect / pencil
1.8 i	06.01 - 12.03	90	1834	4	B 4184 SJ	**CL136**	1			twin coil / for cyl 1-4
						CL137	1			twin coil / for cyl 2-3
						CL707	2			semidirect / pencil
1.8 i	03.98 - 12.03	92	1834	4	B 4184 SM	**CL136**	1			twin coil / for cyl 1-4
						CL137	1			twin coil / for cyl 2-3
1.9 T4	05.97 - 07.00	147	1855	4	B 4194 T/B 4194 T2	**CL707**	2			semidirect / pencil
2.0	07.95 - 12.03	100	1948	4	B 4204 S2/B 4204 S	**CL136**	1			twin coil / for cyl 1-4
						CL137	1			twin coil / for cyl 2-3
						CL707	2			semidirect / pencil
2.0	07.95 - 08.99	103	1948	4	B 4204 S	**CL136**	1			twin coil / for cyl 1-4
						CL137	1			twin coil / for cyl 2-3
2.0 T	10.97 - 12.03	118	1948	4	B 4204 T	**CL707**	2			semidirect / pencil
2.0 T	06.01 - 12.03	120	1948	4	B 4204 T3	**CL707**	2			semidirect / pencil
2.0 T	07.00 - 06.01	121	1948	4	B 4204 T2/B 4204 T3	**CL707**	2			semidirect / pencil
2.0 T4	07.00 - 12.03	147	1948	4	B 4204 T5	**CL707**	2			semidirect / pencil
S40 II (MS)										
1.6	01.05 -	74	1596	4	B 4164 S3	**CL403**	1			
1.8	04.04 -	92	1798	4	B 4184 S11	**CL405**	4	CP048	4	pencil
1.8 FlexFuel	01.06 -	92	1798	4	B 4184 S8	**CL405**	4	CP048	4	pencil
2.0	10.06 -	107	1999	4	B 4204 S3	**CL405**	4	CP048	4	pencil
2.4	01.04 -	103	2435	5	B 5244 S5	**CL410**	5	CP035	5	pencil
2.4	01.04 -	125	2435	5	B 5244 S4	**CL410**	5	CP035	5	pencil
2.5 T5	01.04 -	162	2521	5	B 5254 T3	**CL410**	5	CP035	5	pencil
2.5 T5	03.07 -	169	2521	5	B 5254 T7	**CL410**	5	CP035	5	pencil
2.5 T5 AWD	04.04 -	162	2521	5	B 5254 T3	**CL410**	5	CP035	5	pencil
2.5 T5 AWD	03.07 -	169	2521	5	B 5254 T7	**CL410**	5	CP035	5	pencil
S60 I										
2.0 T	07.00 - 07.04	132	1984	5	B 5204 T5	**CL121**	5	CP034	5	year / pencil
	08.04 - 04.10	132	1984	5	B 5204 T5	**CL410**	5	CP035	5	year / pencil
2.3 T5	11.00 - 04.10	184	2319	5	B 5234 T3	**CL121**	5	CP034	5	pencil
2.4	11.00 - 04.10	103	2435	5	B 5244 S2	**CL121**	5	CP034	5	pencil
2.4	11.00 - 04.10	125	2435	5	B 5244 S	**CL121**	5	CP034	5	pencil
2.4 BiFuel (CNG)	06.02 - 04.10	103	2435	5	B 5244 SG	**CL121**	5	CP034	5	pencil
2.4 T	11.00 - 04.10	147	2435	5	B 5244 T3	**CL410**	5	CP035	5	pencil
2.4 T AWD	11.01 - 04.10	147	2435	5	B 5244 T3	**CL410**	5	CP035	5	pencil
2.4 T5	04.04 - 04.10	191	2401	5	B 5244 T5	**CL410**	5	CP035	5	pencil
2.5 T	02.04 - 04.10	154	2521	5	B 5254 T2	**CL121**	5	CP034	5	pencil
2.5 T AWD	04.04 - 04.10	154	2521	5	B 5254 T2	**CL121**	5	CP034	5	pencil
R 2.5 T AWD	03.03 - 04.10	221	2521	5	B 5254 T4	**CL410**	5	CP035	5	pencil
S60 II										
2.0 T	04.10 -	149	1999	4	B 4204 T6	**CL413**	4			pencil
2.0 T	12.13 -	132	1984	5	B 5204 T8	**CL410**	5			pencil

VOLVO S60 II ▶

model	year	kW	cm³	cyl	engine	coil	pcs	boot	pcs	info
VOLVO										
S60 II										
2.0 T5	04.10 -	177	1999	4	B 4204 T7	**CL413**	4			pencil
3.0 T6 AWD	04.10 -	224	2953	6	B 6304 T4	**CL723**	6			pencil
S70 (LS)										
2.0	01.97 - 11.00	93	1984	5	B 5202 S/B 5202 FS	**CL119**	1			
2.0	01.97 - 11.00	105	1984	5	B 5204 F	**CL119**	1			
2.0	01.97 - 11.00	120	1984	5	B 5204 T4	**CL121**	5	CP034	5	pencil
2.0	01.97 - 11.00	132	1984	5	B 5204 T2	**CL119**	1			
2.0 Turbo	01.97 - 11.00	155	1984	5	B 5204 T	**CL119**	1			
2.0 Turbo	01.97 - 11.00	166	1984	5	B 5204 T3	**CL119**	1			with distributor
						CL121	5	CP034	5	pencil
2.3	04.99 - 09.00	195	2319	5	B 5234 T7	**CL119**	1			with distributor
						CL121	5	CP034	5	pencil
2.3 T-5	01.97 - 07.98	176	2319	5	B 5234 T3	**CL119**	1			year / with distributor
	08.98 - 11.00	176	2319	5	B 5234 T3	**CL121**	5	CP034	5	year / pencil
2.3 T5 AWD	07.97 - 09.00	184	2319	5	B 5234 T4	**CL119**	1			
2.3 Turbo	01.97 - 11.00	184	2319	5	B 5234 FT+	**CL119**	1			
2.4	08.99 - 11.00	103	2435	5	B 5244 SG/B 5244 S2	**CL121**	5	CP034	5	pencil
2.4	01.97 - 11.00	125	2435	5	B 5244 S/B 5254 S	**CL119**	1			with distributor
						CL121	5	CP034	5	pencil
2.4 AWD	04.99 - 09.00	103	2435	5	B 5244 S2	**CL121**	5	CP034	5	pencil
2.4 AWD	11.96 - 05.99	106	2435	5	B 5252 FS	**CL119**	1			
2.4 AWD	10.98 - 05.99	121	2435	5	B 5254 S	**CL121**	5	CP034	5	pencil
2.4 AWD	04.99 - 09.00	125	2435	5	B 5244 S	**CL121**	5	CP034	5	pencil
2.4 T5 AWD	11.96 - 07.98	142	2435	5	B 5254 T	**CL119**	1			year / with distributor
	08.98 - 04.99	142	2435	5	B 5254 T	**CL121**	5	CP034	5	year / pencil
2.4 Turbo	01.97 - 07.98	142	2435	5	B 5254 T/B 5244 T	**CL119**	1			year / with distributor
	08.98 - 11.00	142	2435	5	B 5254 T/B 5244 T	**CL121**	5	CP034	5	year / pencil
2.5	01.97 - 11.00	106	2435	5	B 5252 FS	**CL119**	1			
2.5	06.98 - 11.00	121	2435	5	B 5254 S	**CL119**	1			
2.5 BiFuel	07.99 - 11.00	103	2435	5	B 5244 SG	**CL121**	5	CP034	5	pencil
2.5 BiFuel	10.98 - 11.00	106	2435	5	GB 5252 S	**CL119**	1			
S80 I (TS, XY)										
2.0	06.98 - 07.06	120	1984	5	B 5204 T4	**CL121**	5	CP034	5	pencil
2.0 T	12.99 - 07.04	132	1984	5	B 5204 T5	**CL121**	5	CP034	5	year / pencil
	08.04 - 07.06	132	1984	5	B 5204 T5	**CL410**	5	CP035	5	year / pencil
2.0 T	06.98 - 07.06	166	1984	5	B 5204 T3	**CL121**	5	CP034	5	pencil
2.4	01.99 - 07.06	103	2435	5	B 5244 S2	**CL121**	5	CP034	5	pencil
2.4	01.99 - 07.06	125	2435	5	B 5244 S	**CL121**	5	CP034	5	pencil
2.4 BiFuel (CNG)	09.01 - 07.06	103	2435	5	B 5244 SG2	**CL121**	5	CP034	5	pencil
2.4 T	06.00 - 07.06	147	2435	5	B 5244 T3	**CL121**	5	CP034	5	pencil
2.4 T5 AWD	04.00 - 09.03	147	2435	5	B 5244 T3	**CL121**	5	CP034	5	pencil
2.5 T	03.03 - 07.06	154	2521	5	B 5254 T2	**CL121**	5	CP034	5	pencil
2.5 T AWD	07.03 - 07.06	154	2521	5	B 5254 T2	**CL121**	5	CP034	5	pencil
2.8 T6	05.98 - 07.06	200	2783	6	B 6284 T	**CL121**	6	CP034	6	pencil
2.9	03.99 - 07.06	147	2922	6	B 6294 S	**CL121**	6	CP034	6	pencil
2.9	05.98 - 07.06	150	2922	6	B 6304 S3	**CL121**	6	CP034	6	pencil
3.0	06.01 - 07.06	144	2922	6	B 6294 S2	**CL121**	6	CP034	6	pencil
3.0 T6	06.01 - 07.06	200	2922	6	B 6294 T	**CL121**	6	CP034	6	pencil
S80 II (AS)										
2.0	01.08 -	107	1999	4	B 4204 S3	**CL405**	4	CP048	4	pencil
2.0 FlexFuel	01.08 -	107	1999	4	B 4204 S4	**CL405**	4	CP048	4	pencil
2.5 T	03.06 -	147	2521	5	B 5254 T6	**CL410**	5	CP035	5	pencil
2.5 T	01.10 -	170	2521	5	B 5254 T10	**CL410**	5	CP035	5	pencil
2.5 T FlexFuel	05.08 -	147	2521	5	B 5254 T8	**CL410**	5	CP035	5	pencil
2.5 T FlexFuel	01.10 -	170	2521	5	B 5254 T11	**CL410**	5	CP035	5	pencil
3.0 T6 AWD	10.10 -	224	2953	6	B 6304 T4	**CL723**	6			pencil
3.2	03.06 -	175	3192	6	B 6324 S	**CL723**	6			pencil
3.2 AWD	01.07 -	175	3192	6	B 6324 S	**CL723**	6			pencil
S90										
2.9	01.97 - 05.98	132	2922	6	B 6304 S2	**CL719**	6			pencil
2.9	01.97 - 05.98	150	2922	6	B 6304 G	**CL719**	6			pencil
V40 CC										
2.0 T5	12.13 -	132	1984	5	B 5204 T8	**CL410**	5	CP035	5	pencil
2.0 T5 AWD	07.13 -	132	1984	5	B 5204 T8	**CL410**	5	CP035	5	pencil
2.0 T5	03.13 -	157	1984	5	B 5204 T9	**CL410**	5	CP035	5	pencil
2.0 T5 AWD	03.13 -	157	1984	5	B 5204 T9	**CL410**	5	CP035	5	pencil
2.5 T5	12.12 -	187	2497	5	B 5254 T12	**CL410**	5	CP035	5	pencil
2.5 T5 AWD	01.13 -	187	2497	5	B 5254 T12	**CL410**	5	CP035	5	pencil
2.5 T5	01.14 -	183	2497	5	B 5254 T14	**CL410**	5	CP035	5	pencil

model	year	kW	cm³	cyl	engine	coil	pcs	boot	pcs	info
VOLVO										
V40 Combi (VW)										
1.6	12.95 - 08.99	77	1588	4	B 4164 S	**CL136**	1			twin coil / for cyl 1-4
						CL137	1			twin coil / for cyl 2-3
1.6	03.99 - 06.04	80	1587	4	B 4164 S2	**CL136**	1			twin coil / for cyl 1-4
						CL137	1			twin coil / for cyl 2-3
						CL707	2			semidirect / pencil
1.8	07.95 - 08.99	85	1731	4	B 4184 S3/B 4184 S	**CL136**	1			twin coil / for cyl 1-4
						CL137	1			twin coil / for cyl 2-3
						CL707	2			semidirect / pencil
1.8	03.99 - 06.04	90	1783	4	B 4184 S2/B 4184 S9	**CL136**	1			twin coil / for cyl 1-4
						CL137	1			twin coil / for cyl 2-3
						CL707	2			semidirect / pencil
1.8 i	06.01 - 06.04	90	1834	4	B 4184 SJ	**CL707**	2			semidirect / pencil
1.8 i	03.98 - 06.04	92	1834	4	B 4184 SM	**CL136**	1			twin coil / for cyl 1-4
						CL137	1			twin coil / for cyl 2-3
1.9 T4	05.97 - 07.00	147	1855	4	B 4194 T	**CL707**	2			semidirect / pencil
2.0	07.95 - 06.04	100	1948	4	B 4204 S2/B 4204 S	**CL136**	1			twin coil / for cyl 1-4
						CL137	1			twin coil / for cyl 2-3
						CL707	2			semidirect / pencil
2.0	07.95 - 08.99	103	1948	4	B 4204 S	**CL136**	1			twin coil / for cyl 1-4
						CL137	1			twin coil / for cyl 2-3
2.0 T	10.97 - 07.00	118	1948	4	B 4204 T	**CL707**	2			semidirect / pencil
2.0 T	06.01 - 06.04	120	1948	4	B 4204 T3	**CL707**	2			semidirect / pencil
2.0 T4	07.00 - 06.04	147	1948	4	B 4204 T5	**CL707**	2			semidirect / pencil
V50 (MW)										
1.6	01.05 -	74	1596	4	B 4164 S3	**CL403**	1			
1.8	04.04 -	92	1798	4	B 4184 S11	**CL405**	4	CP048	4	pencil
1.8 FlexFuel	01.05 -	92	1798	4	B 4184 S8	**CL405**	4	CP048	4	pencil
2.0	10.06 -	107	1999	4	B 4204 S3	**CL405**	4	CP048	4	pencil
2.0 FlexFuel	01.10 -	107	1999	4	B 4204 S4	**CL405**	4	CP048	4	pencil
2.4	04.04 -	103	2435	5	B 5244 S5	**CL410**	5	CP035	5	pencil
2.4	04.04 -	125	2435	5	B 5244 S4	**CL410**	5	CP035	5	pencil
2.5 T5	04.04 -	162	2521	5	B 5254 T3	**CL410**	5	CP035	5	pencil
2.5 T5	03.07 -	169	2521	5	B 5254 T7	**CL410**	5	CP035	5	pencil
2.5 T5 AWD	04.04 -	162	2521	5	B 5254 T3	**CL410**	5	CP035	5	pencil
2.5 T5 AWD	03.07 -	169	2521	5	B 5254 T7	**CL410**	5	CP035	5	pencil
V60										
2.0 T	09.10 -	149	1999	4	B 4204 T6	**CL413**	4			pencil
2.0 T5	04.14 -	157	1984	5	B 5204 T9	**CL410**	5	CP035	5	pencil
2.0 T5	09.10 -	177	1999	4	B 4204 T7	**CL413**	4			pencil
3.0 T6 AWD	09.10 -	224	2953	6	B 6304 T4	**CL723**	6			pencil
V70 I (LV)										
2.0	01.97 - 03.00	93	1984	5	B 5202 S	**CL119**	1			
2.0	01.97 - 03.00	105	1984	5	B 5204 F	**CL119**	1			
2.0	01.97 - 03.00	120	1984	5	B 5204 T4	**CL121**	5	CP034	5	pencil
2.0	01.97 - 03.00	132	1984	5	B 5204 T2	**CL119**	1			
2.0 Turbo	01.97 - 07.98	155	1984	5	B 5204 T	**CL119**	1			year / with distributor
	08.98 - 03.00	155	1984	5	B 5204 T	**CL121**	5	CP034	5	year / pencil
2.0 Turbo	01.97 - 07.98	166	1984	5	B 5204 T3	**CL119**	1			year / with distributor
	08.98 - 03.00	166	1984	5	B 5204 T3	**CL121**	5	CP034	5	year / pencil
2.0 Turbo AWD	01.97 - 07.98	166	1984	5	B 5204 T3	**CL119**	1			year / with distributor
	08.98 - 03.00	166	1984	5	B 5204 T3	**CL121**	5	CP034	5	year / pencil
2.3 AWD	04.97 - 07.98	177	2319	5	B 5234 T3	**CL119**	1			year / with distributor
	08.98 - 09.98	177	2319	5	B 5234 T3	**CL121**	5	CP034	5	year / pencil
2.3 Turbo	01.97 - 03.00	184	2319	5	B 5234 FT+	**CL119**	1			
2.3 T AWD	04.97 - 03.00	184	2319	5	B 5234 T4/B 5234 FT+	**CL119**	1			
2.3 T-5	01.97 - 07.98	176	2319	5	B 5234 T3	**CL119**	1			year / with distributor
	08.98 - 03.00	176	2319	5	B 5234 T3	**CL121**	5	CP034	5	year / pencil
2.3 T-5 AWD	01.97 - 07.98	176	2319	5	B 5234 T3	**CL119**	1			year / with distributor
	08.98 - 03.00	176	2319	5	B 5234 T3	**CL121**	5	CP034	5	year / pencil
2.4	08.99 - 05.00	103	2435	5	B 5244 SG2/B 5244 S2	**CL121**	5	CP034	5	pencil
2.4	01.97 - 05.00	125	2435	5	B 5244 S/B 5254 S	**CL121**	5	CP034	5	pencil
2.4 AWD	10.98 - 05.99	121	2435	5	B 5254 S	**CL121**	5	CP034	5	pencil
2.4 BiFuel	08.99 - 03.00	103	2435	5	B 5244 SG	**CL121**	5	CP034	5	pencil
2.4 Turbo	01.97 - 07.98	142	2435	5	B 5254 T	**CL119**	1			year / with distributor
	08.98 - 03.00	142	2435	5	B 5254 T/B 5244 T	**CL121**	5	CP034	5	year / pencil
2.5	01.97 - 03.00	106	2435	5	B 5252 FS	**CL119**	1			
2.5	06.98 - 03.00	121	2435	5	B 5254 S	**CL119**	1			
2.5 BiFuel	10.98 - 08.99	106	2435	5	GB 5252 S	**CL119**	1			
2.5 Turbo AWD	01.97 - 07.98	142	2435	5	B 5254 T/B 5244 T	**CL119**	1			year / with distributor
	08.98 - 05.00	142	2435	5	B 5254 T/B 5244 T	**CL121**	5	CP034	5	year / pencil

model	year	kW	cm³	cyl	engine	coil	pcs	boot	pcs	info
VOLVO										
V70 II (SW)										
2.0 T	07.01 - 08.07	132	1984	5	B 5204 T5	**CL121**	5	CP034	5	1st pencil
						CL410	5	CP035	5	2nd pencil
2.3 T5	03.00 - 08.04	184	2319	5	B 5234 T3	**CL121**	5	CP034	5	pencil
2.4	03.00 - 08.07	103	2435	5	B 5244 S2	**CL121**	5	CP034	5	pencil
2.4	03.00 - 08.07	125	2435	5	B 5244 S	**CL121**	5	CP034	5	pencil
2.4 BiFuel (CNG)	09.01 - 08.07	103	2435	5	B 5244 SG	**CL121**	5	CP034	5	pencil
2.4 T	03.00 - 08.03	147	2435	5	B 5244 T3	**CL121**	5	CP034	5	pencil
2.4 T AWD	09.01 - 08.02	147	2435	5	B 5244 T3	**CL121**	5	CP034	5	pencil
2.4 T5	04.04 - 08.07	191	2401	5	B 5244 T5	**CL410**	5	CP035	5	pencil
2.5 AWD	09.02 - 12.04	155	2521	5	B 5254 T2	**CL121**	5	CP034	5	pencil
2.5 T	04.04 - 08.07	154	2521	5	B 5254 T2	**CL121**	5	CP034	5	pencil
2.5 T AWD	09.02 - 08.07	154	2521	5	B 5254 T2	**CL121**	5	CP034	5	pencil
R 2,5 T AWD	03.03 - 08.07	221	2521	5	B 5254 T4	**CL410**	5	CP035	5	pencil
V70 III (BW)										
2.0	10.07 -	107	1999	4	B 4204 S3	**CL405**	4	CP048	4	pencil
2.0 FlexiFuel	01.08 -	107	1999	4	B 4204 S4	**CL405**	4	CP048	4	pencil
2.0 T	01.10 -	149	1999	4	B 4204 T6	**CL413**	4			pencil
2.0 T5	01.10 -	177	1999	4	B 4204 T7	**CL413**	4			pencil
2.5 T	08.07 -	147	2521	5	B 5254 T6	**CL410**	5	CP035	5	pencil
2.5 T	01.10 -	170	2521	5	B 5254 T10	**CL410**	5	CP035	5	pencil
2.5 T FlexiFuel	05.08 -	147	2521	5	B 5254 T8	**CL410**	5	CP035	5	pencil
2.5 T FlexiFuel	10.09 -	170	2521	5	B 5254 T11	**CL410**	5	CP035	5	pencil
3.2	08.07 -	175	3192	6	B 6324 S	**CL723**	6			pencil
3.0 T6 AWD	04.11 -	224	2953	6	B 6304 T4	**CL723**	6			pencil
3.2 AWD	08.07 -	175	3192	6	B 6324 S	**CL723**	6			pencil
V90 Combi										
2.9	01.97 - 12.98	132	2922	6	B 6304 S2	**CL719**	6			pencil
2.9	01.97 - 12.98	150	2922	6	B 6304 G	**CL719**	6			pencil
XC60										
2.0 T	03.10 -	149	1999	4	B 4204 T6	**CL413**	4			pencil
2.0 T5	09.10 -	177	1999	4	B 4204 T7	**CL413**	4			pencil
2.5 T5 AWD	04.14 -	187	2497	5	B 5254 T12	**CL410**	5	CP035	5	pencil
3.0 T6 AWD	03.10 -	224	2953	6	B 6304 T4	**CL723**	6			pencil
3.2 AWD	07.09 -	175	3192	6	B 6324 S	**CL723**	6			pencil
XC70 Cross Country										
2.4 T XC AWD	11.97 - 09.02	142	2435	5	B 5254 T	**CL121**	5	CP034	5	pencil
2.4 T XC AWD	03.00 - 09.02	147	2435	5	B 5244 T3	**CL121**	5	CP034	5	pencil
2.5 T XC AWD	09.02 - 08.07	154	2521	5	B 5254 T2	**CL121**	5	CP034	5	pencil
XC70 II										
3.2 AWD	08.07 -	175	3192	6	B 6324 S	**CL723**	6			pencil
3.0 T6 AWD	01.10 -	224	2953	6	B 6304 T4	**CL723**	6			pencil
XC90 I										
2.5 T	10.02 -	154	2521	5	B 5254 T2	**CL121**	5	CP034	5	pencil
2.5 T AWD	10.12 -	154	2497	5	B 5254 T9	**CL121**	5	CP034	5	pencil
2.9 T6	10.02 -	200	2922	6	B 6294 T	**CL121**	6	CP034	6	pencil
3.2 AWD	05.06 -	175	3192	6	B 6324 S	**CL723**	6			pencil
VW										
Amarok (2H_, S1B)										
2.0 TSI	12.10 -	118	1984	4	CFPA	**CL011**	4			pencil
Beetle (5C1)										
1.2 TSI	07.11 -	77	1197	4	CBZB	**CL002**	1			
1.4 TSI	12.14 -	110	1395	4	CZDA	**CL031**	4			pencil
1.4 TSI	04.11 -	118	1390	4	CTKA/CAVD/CTHD/CNWA	**CL003**	4			pencil
2.0 TSI	04.11 -	147	1984	4	CBFA/CCZA/CCTA	**CL011**	4			pencil
2.0 TSI	12.12 -	155	1984	4	CPPA/CPLA	**CL032**	4			pencil
2.0 TSI	12.14 -	162	1984	4	CULC	**CL032**	4			pencil
2.5	04.11 -	125	2480	5	CCCA/CBUA/CBTA	**CL011**	5			pencil
Beetle Cabriolet (5C7)										
1.2 TSI	12.12 -	77	1197	4	CYVD/CBZB	**CL002**	1			
1.4 TSI	12.14 -	110	1395	4	CZDA	**CL031**	4			pencil
1.4 TSI	12.12 -	118	1390	4	CTKA/CAVD/CTHD/CNWA	**CL003**	4			pencil
1.8 TSI	12.13 -	125	1798	4	CPKA/CPRA	**CL032**	4			pencil
2.0 TSI	12.12 -	147	1984	4	CBFA/CCZA/CCTA	**CL011**	4			pencil
2.0 TSI	12.12 -	155	1984	4	CPPA/CPLA	**CL032**	4			pencil
2.0 TSI	12.14 -	162	1984	4	CULC	**CL032**	4			pencil
Bora (1J2)										
1.4 16V	03.00 - 05.05	55	1390	4	AHW/AXP/APE/AKQ	**CL002**	1			coil 4xPIN / engine code
				4	BCA	**CL003**	4			pencil / engine code
1.6	10.98 - 05.05	74	1595	4	AKL/APF/AEH	**CL002**	1			
1.6	08.00 - 05.05	75	1595	4	AVU/BFQ	**CL002**	1			

VW Bora (1J2) ▶

model	year	kW	cm³	cyl	engine	coil	pcs	boot	pcs	info
VW										
Bora (1J2)										
1.6 16V	05.00 - 05.05	77	1598	4	AUS/ATN	**CL002**	1			coil 4xPIN / engine code
				4	BCB/AZD	**CL003**	4			pencil / engine code
1.6 FSI	01.02 - 05.05	81	1598	4	BAD	**CL003**	4			pencil
1.8	10.98 - 05.05	92	1781	4	AGN	**CL002**	1			
1.8 4motion	02.99 - 05.05	92	1781	4	AGN	**CL002**	1			
1.8 T	05.00 - 05.05	110	1781	4	AGU	**CL004**	4	CP001	4	pencil / engine code
				4	ARX/AUM	**CL005**	4			pencil / engine code
1.8 T	03.02 - 05.05	132	1781	4	AUQ	**CL005**	4			pencil
2.0	10.98 - 05.05	85	1984	4	APK/AZH/AQY	**CL002**	1			engine code
				4	AZJ/AZG	**CL010**	1			engine code
2.0 4motion	04.00 - 05.05	85	1984	4	AZH	**CL002**	1			engine code
				4	AZJ	**CL010**	1			engine code
2.3 V5	10.98 - 10.00	110	2324	5	AGZ	**CL020**	1			
2.3 V5	10.00 - 05.05	125	2324	5	AQN	**CL023**	5			pencil
2.3 V5 4motion	12.98 - 10.00	110	2324	5	AGZ	**CL020**	1			
2.3 V5 4motion	10.00 - 05.05	125	2324	5	AQN	**CL023**	5			pencil
2.8 V6 4motion	03.99 - 04.01	150	2792	6	AQP/AUE	**CL030**	1			year / coil 6xPIN / engine code
	05.01 - 05.05	150		6	BDE	**CL023**	6			year / pencil / engine code
Bora Combi (1J6)										
1.4 16V	09.01 - 05.05	55	1390	4	AHW/AXP	**CL002**	1			coil 4xPIN / engine code
				4	BCA	**CL003**	4			pencil / engine code
1.6	05.99 - 05.05	74	1595	4	APF/AEH	**CL002**	1			
1.6	08.00 - 05.05	75	1595	4	AVU/BFQ	**CL002**	1			
1.6 16V	02.00 - 05.05	77	1598	4	AUS/ATN	**CL002**	1			coil 4xPIN / engine code
				4	BCB/AZD	**CL003**	4			pencil / engine code
1.6 FSI	01.02 - 05.05	81	1598	4	BAD	**CL003**	4			pencil
1.8 4motion	05.99 - 05.05	92	1781	4	AGN	**CL002**	1			
1.8 T	05.00 - 05.05	110	1781	4	AGU	**CL004**	4	CP001	4	pencil / engine code
				4	ARX/AUM	**CL005**	4			pencil / engine code
1.8 T	05.02 - 05.05	132	1781	4	AUQ	**CL005**	4			pencil
2.0	05.99 - 05.05	85	1984	4	APK/AZH/AQY	**CL002**	1			engine code
				4	AZJ/AZG	**CL010**	1			engine code
2.0 4motion	04.00 - 05.05	85	1984	4	AZH	**CL002**	1			engine code
				4	AZJ	**CL010**	1			engine code
2.3 V5	05.99 - 04.00	110	2324	5	AGZ	**CL020**	1			
2.3 V5	10.00 - 05.05	125	2324	5	AQN	**CL023**	5			pencil
2.3 V5 4motion	05.99 - 10.00	110	2324	5	AGZ	**CL020**	1			
2.3 V5 4motion	10.00 - 05.05	125	2324	5	AQN	**CL023**	5			pencil
2.8 V6 4motion	05.99 - 04.01	150	2792	6	AQP/AUE	**CL030**	1			year / coil 6xPIN / engine code
	04.01 - 05.05	150		6	BDE	**CL023**	6			year / pencil / engine code
2.8 VR6	03.00 - 05.00	150	2792	6	AUE	**CL023**	6			pencil
Caddy II Combi (9K9B)										
1.4	11.95 - 01.04	44	1390	4	AEX/AKV/APQ	**CL001**	1			engine code
				4	AUD	**CL002**	1			engine code
1.4 16V	08.00 - 01.04	55	1390	4	AUA	**CL002**	1			
1.6	11.95 - 05.97	55	1595	4	1F	**CL001**	1			
1.6	06.97 - 09.00	55	1598	4	AEE	**CL001**	1			
Caddy II Pick-up (9U7)										
1.6	06.96 - 12.00	55	1598	4	AEE	**CL001**	1			
Caddy II Van (9K9A)										
1.4 60	11.95 - 01.04	44	1390	4	AEX/APQ	**CL001**	1			engine code
				4	AUD	**CL002**	1			engine code
1.4	08.00 - 01.04	55	1390	4	AUA	**CL002**	1			
1.6 75	11.95 - 09.00	55	1598	4	AEE	**CL001**	1			
1.6 75	11.95 - 05.97	55	1595	4	1F	**CL001**	1			
Caddy III Combi (2KB, 2KJ, 2CB, 2CJ)										
1.2 TSI	09.10 -	63	1197	4	CBZA	**CL002**	1			
1.2 TSI	09.10 -	77	1197	4	CBZB	**CL002**	1			
1.4	03.04 - 05.06	55	1390	4	BCA	**CL003**	4			pencil
1.4 16V	05.06 - 08.10	59	1390	4	BUD	**CL003**	4			pencil
1.6	04.04 -	75	1595	4	BGU/BSF/BSE	**CL002**	1			
1.6 BiFuel	05.11 -	75	1595	4	CHGA	**CL002**	1			
2.0 EcoFuel	04.06 -	80	1984	4	BSX	**CL010**	1			
Caddy III Van (2KA, 2KH, 2CA, 2CH)										
1.2 TSI	09.10 -	63	1197	4	CBZA	**CL002**	1			
1.2 TSI	09.10 -	77	1197	4	CBZB	**CL002**	1			
1.4	03.04 - 05.06	55	1390	4	BCA	**CL003**	4			pencil
1.4 16V	05.06 - 08.10	59	1390	4	BUD	**CL003**	4			pencil
1.6	04.04 -	75	1595	4	BGU/BSF/BSE	**CL002**	1			
1.6 BiFuel	05.11 -	75	1595	4	CHGA	**CL002**	1			
2.0 EcoFuel	04.06 -	80	1984	4	BSX	**CL010**	1			

VW ▶

model	year	kW	cm³	cyl	engine	coil	pcs	boot	pcs	info
VW										
Caddy IV Combi (SAB, SAJ)										
1.2 TSI	06.15 -	62	1197	4	CYVC	**CL031**	4			pencil
1.4 TSI CNG	06.15 -	81	1395	4	CPWA	**CL031**	4			pencil
1.4 TSI	05.15 -	92	1395	4	CZCB	**CL031**	4			pencil
Caddy IV Van (SAA, SAH)										
1.2 TSI	06.15 -	62	1197	4	CYVC	**CL031**	4			pencil
1.4 TSI CNG	06.15 -	81	1395	4	CPWA	**CL031**	4			pencil
1.4 TSI	05.15 -	92	1395	4	CZCB	**CL031**	4			pencil
CC (358)										
1.4 TSI	05.15 -	110	1395	4	CZDA	**CL031**	4			pencil
1.4 TSI	11.11 -	118	1390	4	CTHD	**CL003**	4			pencil
1.4 TSI MultiFuel	11.11 -	118	1390	4	CKMA	**CL003**	4			pencil
1.8 TSI	11.11 -	118	1798	4	CDAA	**CL011**	4			pencil
2.0 TSI	11.11 -	155	1984	4	CCZB	**CL011**	4			pencil
3.6 FSI 4motion	11.11 -	220	3597	6	BWS	**CL016**	6			pencil
Corrado (53I)										
1.8 16V	04.89 - 07.92	100	1781	4	KR	**CL018**	1			
1.8 G60	09.88 - 09.93	118	1781	4	PG	**CL018**	1			
2.0 i	04.93 - 12.95	85	1984	4	2E	**CL001**	1			
2.0 i 16V	08.91 - 12.95	100	1984	4	9A	**CL001**	1			
2.9 VR6	08.91 - 12.95	140	2861	6	ABV	**CL001**	1			
Derby (86C, 80)										
1.3	08.83 - 12.84	40	1272	4	HK	**CL018**	1			
Eos (1F7, 1F8)										
1.4 TSI	11.07 -	90	1390	4	CAXA	**CL003**	4			pencil
1.4 TSI	05.08 -	118	1390	4	CAVD/CTHD	**CL003**	4			pencil
1.6 FSI	06.06 - 05.08	85	1598	4	BLF	**CL003**	4			pencil
2.0 FSI	03.06 - 05.08	110	1984	4	BVZ/BVY	**CL011**	4			pencil
2.0 TFSI	03.06 -	147	1984	4	BWA	**CL011**	4			pencil
2.0 TFSI	11.13 -	162	1984	4	CULC	**CL032**	4			pencil
2.0 TSI	11.09 -	155	1984	4	CCZB	**CL011**	4			pencil
3.2 V6	06.06 - 05.09	184	3189	6	CBRA/BUB	**CL016**	6			pencil
3.6 V6	05.09 - 11.10	191	3597	6	CDVA	**CL016**	6			pencil
Fox (5Z1, 5Z3)										
1.2	04.05 -	40	1198	3	BMD/CHFB	**CL009**	3			pencil
1.2	09.10 -	44	1198	3	CHFA	**CL009**	3			pencil
1.4	04.05 -	55	1390	4	BKR	**CL002**	1			
Golf I Cabriolet (155)										
1.8	08.83 - 04.93	70	1781	4	JH	**CL018**	1			
1.8	08.89 - 03.93	72	1781	4	2H	**CL018**	1			
Golf II (19E, 1G1)										
1.0	08.85 - 10.91	37	1043	4	HZ	**CL018**	1			
1.3 cat	06.86 - 12.92	40	1272	4	NZ	**CL001**	1			coil socket with 3 pins
						CL019	1			coil socket with 6 pins
1.6	10.86 - 12.92	51	1595	4	PN	**CL018**	1			
1.6	02.86 - 10.91	53	1595	4	RF	**CL018**	1			
1.6	08.83 - 07.92	55	1595	4	HM/EZ	**CL018**	1			
1.8	08.86 - 01.90	62	1781	4	RH	**CL018**	1			
1.8 Syncro	02.86 - 07.91	66	1781	4	GX	**CL018**	1			
1.8 Syncro	08.88 - 07.91	72	1781	4	1P	**CL018**	1			
1.8 GTI	08.83 - 10.91	82	1781	4	EV/GZ/PB	**CL018**	1			
1.8 GTI cat	01.87 - 10.91	79	1781	4	PF	**CL018**	1			
1.8 GTI 16V	02.86 - 10.91	95	1781	4	PL	**CL018**	1			
1.8 GTI 16V	02.86 - 06.90	102	1781	4	KR	**CL018**	1			
Golf III (1H1)										
1.4	11.91 - 08.97	40	1390	4	AEX/ABD	**CL001**	1			
1.4	10.91 - 08.97	44	1390	4	AEX/ABD	**CL001**	1			
1.6	09.92 - 08.97	55	1598	4	ABU/AEA/AEE	**CL001**	1			
1.6	07.95 - 08.97	74	1595	4	AEK/AFT/AKS	**CL001**	1			
1.8	11.91 - 08.97	55	1781	4	AAM	**CL001**	1			
1.8	11.91 - 08.97	66	1781	4	ACC/ADZ/ABS	**CL001**	1			
1.8 Syncro	01.93 - 08.97	66	1781	4	ADZ/ABS	**CL001**	1			
2.0	11.91 - 08.97	85	1984	4	ADY/AKR/AGG	**CL001**	1			
2.0 Syncro	08.95 - 08.97	85	1984	4	AGG	**CL001**	1			
2.0 GTI 16V	08.92 - 08.97	110	1984	4	ABF	**CL001**	1			
2.8 VR6	01.92 - 08.97	128	2792	6	AAA	**CL001**	1			with distributor
						CL021	1			without distributor
2.9 VR6 Syncro	10.94 - 08.97	140	2861	6	ABV	**CL001**	1			with distributor
						CL021	1			without distributor
Golf III Cabriolet (1E7)										
1.6	10.94 - 05.98	74	1595	4	AEK/AFT/AKS	**CL001**	1			
1.8	07.93 - 05.98	55	1781	4	AAM	**CL001**	1			

VW Golf III Cabriolet (1E7) ▶

model	year	kW	cm³	cyl	engine	coil	pcs	boot	pcs	info
VW										
Golf III Cabriolet (1E7)										
1.8	07.93 - 05.98	66	1781	4	ADZ/ABS	**CL001**	1			
2.0	07.93 - 05.98	85	1984	4	ADY/AKR/AGG	**CL001**	1			
Golf III Variant (1H5)										
1.4	07.93 - 04.99	40	1390	4	ABD	**CL001**	1			
1.4	07.93 - 04.99	44	1390	4	AEX/ABD/APQ	**CL001**	1			
1.6	07.94 - 04.99	74	1595	4	AFT/AKS	**CL001**	1			
1.8	07.93 - 04.99	55	1781	4	ANN/AAM	**CL001**	1			
1.8	07.93 - 04.99	66	1781	4	ADZ/ANP	**CL001**	1			
1.8 Syncro	10.94 - 04.99	66	1781	4	ADZ	**CL001**	1			
2.0	07.93 - 04.99	85	1984	4	ADY/AKR/AGG	**CL001**	1			
2.0 Syncro	08.95 - 04.99	85	1984	4	AGG	**CL001**	1			
2.9 VR6 Syncro	10.94 - 04.99	140	2861	6	ABV	**CL001**	1			with distributor
						CL021	1			without distributor
Golf IV (1J1)										
1.4 16V	08.97 - 06.05	55	1390	4	AHW/AXP/APE/AKQ	**CL002**	1			coil 4 xPIN / engine code
				4	BCA	**CL003**	4			pencil / engine code
1.6	08.97 - 05.04	74	1595	4	AKL/APF/AEH	**CL002**	1			
1.6	08.00 - 06.05	75	1595	4	AVU/BFQ	**CL002**	1			
1.6 16V	02.00 - 06.05	77	1598	4	AUS/ATN	**CL002**	1			coil 4xPIN / engine code
				4	BCB/AZD	**CL003**	4			pencil / engine code
1.6 FSI	01.02 - 06.05	81	1598	4	BAD	**CL003**	4			pencil
1.8	08.97 - 06.05	92	1781	4	AGN	**CL002**	1			
1.8 4motion	05.98 - 06.05	92	1781	4	AGN	**CL002**	1			
1.8 T	08.97 - 06.05	110	1781	4	AGU	**CL004**	4	CP001	4	pencil / engine code
				4	AUM	**CL005**	4			pencil / engine code
1.8 T GTI	08.01 - 06.05	132	1781	4	AUQ	**CL005**	4			
2.0	07.98 - 05.04	85	1984	4	APK/AQY	**CL002**	1			engine code
				4	AZJ/AZG	**CL010**	1			engine code
2.0 4motion	10.00 - 06.05	85	1984	4	AZH	**CL002**	1			engine code
				4	AZJ	**CL010**	1			engine code
2.3 V5	08.97 - 10.00	110	2324	5	AGZ	**CL020**	1			
2.3 V5	10.00 - 06.05	125	2324	5	AQN	**CL023**	5			pencil
2.3 V5 4motion	12.98 - 04.99	110	2324	5	AGZ	**CL020**	1			
2.3 V5 4motion	10.00 - 06.05	125	2324	5	AQN	**CL023**	5			pencil
2.8 V6 4motion	03.99 - 04.01	150	2792	6	AQP/AUE	**CL030**	1			year / coil 6xPIN / engine code
	05.01 - 06.05	150		6	BDE	**CL023**	6			year / pencil / engine code
3.2 R32 4motion	09.02 - 06.05	177	3189	6	BFH/BML	**CL016**	6			pencil
Golf IV Cabriolet (1E7)										
1.6	06.98 - 06.02	74	1595	4	AFT/AKS	**CL001**	1			
1.8	06.98 - 06.02	55	1781	4	ANN/AAM	**CL001**	1			
1.8	06.98 - 06.02	66	1781	4	ADZ/ANP	**CL001**	1			
2.0	06.98 - 06.02	85	1984	4	AKR/AGG	**CL001**	1			engine code
				4	ATU	**CL002**	1			engine code
Golf IV Variant (1J5)										
1.4 16V	05.99 - 06.06	55	1390	4	AHW/AXP/APE/AKQ	**CL002**	1			coil 4xPIN / engine code
				4	BCA	**CL003**	4			pencil / engine code
1.6	05.99 - 04.02	74	1595	4	AKL/APF/AEH	**CL002**	1			
1.6	08.00 - 06.06	75	1595	4	AVU/BFQ	**CL002**	1			
1.6 16V	02.00 - 06.06	77	1598	4	AUS/ATN	**CL002**	1			coil 4xPIN / engine code
				4	BCB/AZD	**CL003**	4			pencil / engine code
1.6 FSI	01.02 - 06.06	81	1598	4	BAD	**CL003**	4			pencil
1.8 4motion	05.99 - 06.06	92	1781	4	AGN	**CL002**	1			
1.8 T	05.00 - 06.06	110	1781	4	AGU	**CL004**	4	CP001	4	pencil / engine code
				4	AUM	**CL005**	4			pencil / engine code
2.0	05.99 - 06.06	85	1984	4	APK/AQY	**CL002**	1			engine code
				4	AZJ	**CL010**	1			engine code
2.0 4motion	10.00 - 06.06	85	1984	4	AZH	**CL002**	1			engine code
				4	AZJ	**CL010**	1			engine code
2.0 BiFuel	02.02 - 06.06	85	1984	4	BEH	**CL010**	1			
2.3 V5	05.99 - 06.06	110	2324	5	AGZ	**CL020**	1			
2.3 V5	10.00 - 06.06	125	2324	5	AQN	**CL023**	5			pencil
2.3 V5 4motion	05.99 - 06.06	110	2324	5	AGZ	**CL020**	1			
2.3 V5 4motion	10.00 - 06.06	125	2324	5	AQN	**CL023**	5			pencil
2.8 V6 4motion	05.99 - 04.01	150	2792	6	AQP/AUE	**CL030**	1			year / coil 6xPIN / engine code
	05.01 - 06.06	150	2792	6	BDE	**CL023**	6			year / pencil / engine code
Golf V (1K1)										
1.4 16V	10.03 - 05.06	55	1390	4	BCA	**CL003**	4			pencil
1.4 16V	05.06 - 11.08	59	1390	4	BUD	**CL003**	4			pencil
1.4 FSI	10.03 - 07.06	66	1390	4	BKG/BLN	**CL003**	4			pencil
1.4 TSI	05.07 - 11.08	90	1390	4	CAXA	**CL003**	4			pencil
1.4 TSI	05.06 - 11.08	103	1390	4	BMY	**CL003**	4			pencil

VW Golf V (1K1) ▶

model	year	kW	cm³	cyl	engine	coil	pcs	boot	pcs	info
VW										
Golf V (1K1)										
1.4 TSI	11.05 - 11.08	125	1390	4	BLG	**CL003**	4			pencil
1.6	01.04 - 11.08	75	1595	4	BGU/BSF/BSE	**CL002**	1			
1.6 FSI	10.03 - 07.08	85	1598	4	BLF/BLP/BAG	**CL003**	4			pencil
2.0 FSI	01.04 - 11.08	110	1984	4	BVX/BLX/BLY/AXW/BVZ/BVY	**CL011**	4			pencil
2.0 FSI 4motion	08.04 - 11.08	110	1984	4	BVX/BLX	**CL011**	4			pencil
2.0 GTI	10.04 - 02.09	147	1984	4	BWA/AXX	**CL011**	4			pencil
2.0 GTI	09.06 - 12.08	169	1984	4	BYD	**CL011**	4			pencil
3.2 R32 4motion	11.05 - 11.08	184	3189	6	CBRA/BUB	**CL016**	6			pencil
Golf V Variant (1K5)										
1.4	06.07 - 07.09	59	1390	4	BUD	**CL003**	4			pencil
1.4 TSI	06.07 - 07.09	90	1390	4	CAXA	**CL003**	4			pencil
1.4 TSI	06.07 - 07.09	103	1390	4	BMY	**CL003**	4			pencil
1.4 TSI	07.08 - 07.09	118	1390	4	CAVD	**CL003**	4			pencil
1.4 TSI	06.07 - 07.09	125	1390	4	BLG	**CL003**	4			pencil
1.6	06.07 - 07.09	75	1595	4	BGU/CCSA/BSF/BSE	**CL002**	1			
2.0	06.07 - 07.09	147	1984	4	BWA/CAWB/CCTA	**CL011**	4			pencil
Golf VI (5K1)										
1.2 TSI	05.10 - 11.12	63	1197	4	CBZA	**CL002**	1			
1.2 TSI	05.09 - 11.12	77	1197	4	CBZB	**CL002**	1			
1.4	10.08 - 11.12	59	1390	4	CGGA	**CL003**	4			pencil
1.4 TSI	10.08 - 11.12	90	1390	4	CAXA	**CL003**	4			pencil
1.4 TSI	10.08 - 11.12	118	1390	4	CTKA/CAVD/CTHD/CNWA	**CL003**	4			pencil
1.6	10.08 - 11.12	75	1595	4	CCSA/BSF/CMXA/BSE	**CL002**	1			
1.6 BiFuel	03.09 - 11.12	75	1595	4	CHGA	**CL002**	1			
1.6 MultiFuel	10.08 - 11.12	75	1595	4	CCSA/CMXA	**CL002**	1			
1.8 TSI	06.09 - 01.11	118	1798	4	CDAA	**CL011**	4			pencil
2.0 GTi	04.09 - 11.12	155	1984	4	CCZB	**CL011**	4			pencil
2.0 R 4motion	11.09 - 11.13	188	1984	4	CRZA/CDLC	**CL011**	4			pencil
2.0 R 4motion	11.09 - 11.12	199	1984	4	CDLF	**CL011**	4			pencil
Golf VI Cabriolet (517)										
1.2 TSI	03.11 - 11.13	77	1197	4	CBZB	**CL002**	1			
1.4 TSI	11.11 -	90	1390	4	CAXA	**CL003**	4			pencil
1.4 TSI	03.11 -	118	1390	4	CTKA/CAVD/CTHD/CNWA	**CL003**	4			pencil
2.0 GTI	11.11 -	155	1984	4	CCZB	**CL011**	4			pencil
2.0 TSI	11.13 -	162	1984	4	CULC	**CL032**	4			pencil
Golf VI Variant (AJ5)										
1.2 TSI	07.10 - 07.13	63	1197	4	CBZA	**CL002**	1			
1.2 TSI	08.09 - 07.13	77	1197	4	CBZB	**CL002**	1			
1.4	07.09 - 07.13	59	1390	4	BUD/CGGA	**CL003**	4			pencil
1.4 TSI	07.09 - 07.13	90	1390	4	CAXA	**CL003**	4			pencil
1.4 TSI	07.09 - 07.13	118	1390	4	CTKA/CAVD/CTHD/CNWA	**CL003**	4			pencil
1.6	07.09 - 07.13	75	1595	4	CCSA/BSF/CMXA/BSE	**CL002**	1			
Golf VII (5G1, BE1)										
1.0 TSI	05.15 -	85	999	3	CHZA	**CL031**	3			pencil
1.2 TSI	08.12 -	63	1197	4	CJZB/CYVA	**CL031**	4			pencil
1.2 TSI	11.12 -	77	1197	4	CJZA	**CL031**	4			pencil
1.2 TSI	04.14 -	81	1197	4	CYVB	**CL031**	4			pencil
1.4 GTE Hybrid	05.14 -	110	1395	4	CUKB	**CL031**	4			pencil
1.4 TGI CNG	06.13 -	81	1395	4	CPWA/CZBA	**CL031**	4			pencil
1.4 TSI	11.12 -	90	1395	4	CPVA/CMBA/CXSA	**CL031**	4			pencil
1.4 TSI	05.14 -	92	1395	4	CPVB/CZCA	**CL031**	4			pencil
1.4 TSI	11.12 -	103	1395	4	CHPA/CPTA	**CL031**	4			pencil
1.4 TSI MultiFuel	04.13 -	90	1395	4	CPVA	**CL031**	4			pencil
1.4 TSI MultiFuel	12.13 -	92	1395	4	CPVB	**CL031**	4			pencil
1.6	05.14 -	81	1598	4	CWVA	**CL031**	4			pencil
2.0 GTI	11.13 -	155	1984	4	CNTA/CXCA	**CL032**	4			pencil
2.0 GTI	04.13 -	162	1984	4	CXDA/CHHB	**CL032**	4			pencil
2.0 GTI	04.13 -	169	1984	4	CHHA	**CL032**	4			pencil
2.0 R 4motion	11.13 -	206	1984	4	CJXB	**CL032**	4			pencil
2.0 R 4motion	11.13 -	221	1984	4	CJXC	**CL032**	4			pencil
Golf VII Combi (BA5)										
1.0 TSI	05.15 -	85	999	3	CHZA	**CL031**	3			pencil
1.2 TSI	05.13 -	63	1197	4	CJZB/CYVA	**CL031**	4			pencil
1.2 TSI	05.13 -	77	1197	4	CJZA	**CL031**	4			pencil
1.2 TSI	04.14 -	81	1197	4	CYVB	**CL031**	4			pencil
1.4 TGI CNG	09.13 -	110	1395	4	CPWA	**CL031**	4			pencil
1.4 TSI	05.13 -	90	1395	4	CPVA/CXSA	**CL031**	4			pencil
1.4 TSI	05.14 -	92	1395	4	CPVB/CZCA	**CL031**	4			pencil
1.4 TSI	05.13 -	103	1395	4	CHPA	**CL031**	4			pencil
1.4 TSI	05.14 -	110	1395	4	CHPB/CZDA	**CL031**	4			pencil
1.4 TSI MultiFuel	04.13 -	90	1395	4	CPVA	**CL031**	4			pencil

VW Golf VII Combi (BA5) ▶

model	year	kW	cm³	cyl	engine	coil	pcs	boot	pcs	info
VW										
Golf VII Combi (BA5)										
1.4 TSI MultiFuel	05.14 -	92	1395	4	CPVB	**CL031**	4			pencil
1.6	05.14 -	81	1598	4	CWVA	**CL031**	4			pencil
2.0 R 4motion	03.15 -	206	1984	4	CJXB	**CL032**	4			pencil
2.0 R 4motion	03.15 -	221	1984	4	CJXC	**CL032**	4			pencil
Golf Alltrack (BA5)										
1.8 TSI 4motion	12.14 -	132	1798	4	CJSB	**CL032**	4			pencil
Golf Plus (5M1, 521)										
1.2 TSI	11.09 - 12.13	77	1197	4	CBZB	**CL002**	1			
1.4 16V	01.05 - 11.06	55	1390	4	BCA	**CL003**	4			pencil
1.4 16V	05.06 - 12.13	59	1390	4	BUD/CGGA	**CL003**	4			pencil
1.4 FSI	07.05 - 11.06	66	1390	4	BLN	**CL003**	4			pencil
1.4 TSI	06.07 - 12.13	90	1390	4	CAXA	**CL003**	4			pencil
1.4 TSI	05.06 - 06.08	103	1390	4	BMY	**CL003**	4			pencil
1.4 TSI	06.08 - 12.13	118	1390	4	CAVD/CNWA	**CL003**	4			pencil
1.4 TSI	05.06 - 06.08	125	1390	4	BLG	**CL003**	4			pencil
1.6	05.05 - 12.13	75	1595	4	CCSA/BSF/CMXA/BSE	**CL002**	1			
1.6 BiFuel	05.09 - 12.13	75	1595	4	CHGA	**CL002**	1			
1.6 FSI	01.05 - 05.08	85	1598	4	BLF	**CL003**	4			pencil
1.6 MultiFuel	11.07 - 12.13	75	1595	4	CCSA/CMXA	**CL002**	1			
2.0 FSI	05.05 - 06.08	110	1984	4	BLY/BLR/BVZ/BVY	**CL011**	4			pencil
Golf Sportsvan (AM1)										
1.0 TSI	05.15 -	85	999	3	CHZA	**CL031**	3			pencil
1.2 TSI	05.14 -	63	1197	4	CYVA	**CL031**	4			pencil
1.2 TSI	04.14 -	81	1197	4	CYVB	**CL031**	4			pencil
1.4 TSI	04.14 -	92	1395	4	CPVB/CZCA	**CL031**	4			pencil
1.4 TSI	02.14 -	110	1395	4	CZDA	**CL031**	4			pencil
1.4 TSI MultiFuel	04.14 -	92	1395	4	CPVB	**CL031**	4			pencil
1.6	05.14 -	81	1598	4	CWVA	**CL031**	4			pencil
Jetta II (19E, 1G2, 165)										
1.3 cat	06.87 - 12.91	40	1272	4	NZ/2G	**CL018**	1			
1.8	08.86 - 01.90	62	1781	4	RH	**CL018**	1			
1.8	08.84 - 10.91	66	1781	4	GX/GU/HV	**CL018**	1			
1.8	08.85 - 10.87	79	1781	4	RD	**CL018**	1			
1.8 16V	08.86 - 10.91	95	1781	4	PL	**CL018**	1			
Jetta III (1K2)										
1.4 TSI	05.07 - 10.10	90	1390	4	CAXA	**CL003**	4			pencil
1.4 TSI	07.06 - 10.10	103	1390	4	BMY	**CL003**	4			pencil
1.4 TSI	07.08 - 10.10	118	1390	4	CAVD	**CL003**	4			pencil
1.4 TSI	07.06 - 10.10	125	1390	4	BLG	**CL003**	4			pencil
1.6	10.05 - 10.10	75	1595	4	BSF/BSE	**CL002**	1			
1.6 FSI	09.05 - 10.10	85	1598	4	BLF	**CL003**	4			pencil
1.6 MultiFuel	01.08 - 10.10	75	1595	4	CCSA	**CL002**	1			
2.0 FSI	08.05 - 10.10	110	1984	4	BLX/BLY/BLR/BVZ/BVY	**CL011**	4			pencil
2.0 TFSI	03.08 - 10.10	125	1984	4	CAWA	**CL011**	4			pencil
2.0 TFSI	10.05 - 10.10	147	1984	4	BWA/BPY/AXX/CBFA/CCZA	**CL011**	4			pencil
2.5 FSI	01.06 - 10.10	110	2480	5	BTK/BGP	**CL011**	5			pencil
2.5 FSI	07.08 - 10.10	125	2480	5	CCCA/CBUA/CBTA	**CL011**	5			pencil
Jetta IV (162, 163)										
1.2 TSI	02.11 -	77	1197	4	CBZB	**CL002**	1			
1.4 TSI	05.11 -	90	1390	4	CMSB/CAXA	**CL003**	4			pencil
1.4 TSI	08.14 -	92	1395	4	CZCA	**CL031**	4			pencil
1.4 TSI	04.11 - 07.14	110	1390	4	CTHA/CAVA	**CL003**	4			pencil
1.4 TSI	08.14 -	110	1395	4	CZDA	**CL031**	4			pencil
1.4 TSI	04.11 -	118	1390	4	CAVD/CTHD	**CL003**	4			pencil
1.4 TSI Hybrid	04.11 -	110	1395	4	CNLA/CRJA	**CL031**	4			pencil
1.6	12.11 -	77	1598	4	CFNA/CLRA	**CL003**	4			pencil
1.6	03.13 -	63	1598	4	CFNB	**CL003**	4			pencil
1.8 TSI	07.14 -	125	1798	4	CPKA/CPRA	**CL032**	4			pencil
2.0	06.10 -	85	1984	4	CKJA/CBPA	**CL002**	1			
2.0 TSI	12.10 -	147	1984	4	CBFA/CCZA/CCTA	**CL011**	4			pencil
2.0 TSI	12.12 -	155	1984	4	CPPA/CPLA	**CL032**	4			pencil
2.5 FSI	04.10 -	125	2480	5	CCCA/CBUA/CBTA	**CL011**	5			pencil
LT 28-35 I Bus (281-363)										
2.4 i	08.89 - 06.96	69	2383	6	1E	**CL018**	1			
LT 28-35 I Flatbed (281-363)										
2.4 i	03.94 - 06.96	69	2383	6	1E	**CL018**	1			
LT 28-35 I Van (281-363)										
2.4 i	03.94 - 06.96	69	2383	6	1E	**CL018**	1			
LT 28-35 II Bus (2DB, 2DE, 2DK)										
2.3	05.96 - 07.06	105	2295	4	AGL	**CL604**	2	CP004	2	semidirect / pencil

model	year	kW	cm³	cyl	engine	coil	pcs	boot	pcs	info
VW										
LT 28-46 II Flatbed (2DC, 2DF, 2DG, 2DL, 2DM)										
2.3	06.96 - 07.06	105	2295	4	AGL	**CL604**	2	CP004	2	semidirect / pencil
LT 28-46 II Van (2DA, 2DD, 2DH)										
2.3	05.96 - 07.06	105	2295	4	AGL	**CL604**	2	CP004	2	semidirect / pencil
LT 40-55 I Flatbed (293-909)										
2.4 i	03.94 - 06.96	69	2383	6	1E	**CL018**	1			
LT 40-55 I Van (291-512)										
2.4 i	01.93 - 06.96	69	2383	6	1E	**CL018**	1			
Lupo (6X1, 6E1)										
1.0	09.98 - 07.05	37	999	4	AER/ALL	**CL001**	1			engine code / with distributor
				4	ALD/ANV/AUC	**CL002**	1			engine code
1.0	10.98 - 05.00	37	997	4	AHT	**CL007**	1			rail coil
1.4	10.00 - 07.05	44	1390	4	AUD	**CL002**	1			
1.4 16V	09.98 - 07.05	55	1390	4	AHW/APE/AKQ/AUA	**CL002**	1			coil 4xPIN / engine code
				4	BBY	**CL003**	4			pencil / engine code
1.4 16V	08.99 - 07.05	74	1390	4	AFK/AUB/AQQ	**CL002**	1			
1.4 FSI	02.01 - 07.05	77	1390	4	ARR	**CL003**	4			pencil
1.6 GTI	09.00 - 07.05	92	1598	4	AVY	**CL002**	1			
Multivan V (7HM, 7HN, 7HF, 7EF, 7EM, 7EN)										
2.0	11.03 -	85	1984	4	AXA	**CL002**	1			
3.2 V6	02.04 - 06.04	170	3189	6	BDL	**CL016**	6			pencil
3.2 V6	02.04 - 11.09	173	3189	6	BKK/CFLA	**CL016**	6			pencil
3.2 V6 4motion	07.04 - 11.09	173	3189	6	BKK/CFLA	**CL016**	6			pencil
Multivan T6 (SGF, SGM, SGN)										
2.0 TSI	04.15 - -	110	1984	4	CJKB	**CL011**	4			pencil
2.0 TSI	04.15 - -	150	1984	4	CJKB	**CL011**	4			pencil
2.0 TSI 4motion	06.15 - -	150	1984	4	CJKA	**CL011**	4			pencil
New Beetle (9C1, 1C1)										
1.4	11.01 - 09.10	55	1390	4	BCA	**CL003**	4			pencil
1.6	10.99 - 09.00	74	1595	4	AWH	**CL002**	1			
1.6	06.00 - 09.10	75	1595	4	AYD/BFS	**CL002**	1			
1.8 T	10.99 - 09.10	110	1781	4	AWV/APH/AVC/AWU	**CL005**	4			pencil
2.0	01.98 - 09.10	85	1984	4	AVH	**CL002**	1			engine code
				4	AZG	**CL010**	1			engine code
2.3 V5	10.00 - 09.10	125	2324	5	AQN	**CL023**	5			pencil
2.5	07.05 - 09.10	110	2480	5	BPS/BPR	**CL011**	5			pencil
3.2 RSI 4motion	04.00 - 05.01	165	3188	6	AXJ	**CL030**	1			
New Beetle Cabriolet (1Y7)										
1.4	01.03 - 09.10	55	1390	4	BCA	**CL003**	4			pencil
1.6	01.03 - 09.10	75	1595	4	BFS	**CL002**	1			
1.8 T	01.03 - 09.10	110	1781	4	AWU	**CL005**	4			pencil
2.0	09.02 - 10.10	85	1984	4	AZJ	**CL010**	1			
2.5	07.05 - 09.10	110	2480	5	BPS/BPR	**CL011**	5			pencil
Passat (32B)										
1.6	08.80 - 03.88	55	1595	4	DT	**CL018**	1			
Passat (3A2, 35I)										
1.6	02.88 - 12.88	55	1595	4	ABN/EZ	**CL018**	1			
1.6	10.94 - 08.96	74	1595	4	AEK/AFT	**CL001**	1			
1.8	08.90 - 08.96	55	1781	4	AAM	**CL001**	1			
1.8	02.88 - 08.96	66	1781	4	RP/ADZ	**CL001**	1			
1.8	04.88 - 07.93	79	1781	4	PF	**CL018**	1			
1.8	04.88 - 07.92	82	1781	4	PB	**CL018**	1			
1.8 16V	04.88 - 12.89	100	1781	4	KR	**CL018**	1			
1.8 G60 Syncro	08.88 - 08.96	118	1781	4	PG	**CL018**	1			
2.0	03.95 - 08.96	79	1984	4	AEP	**CL001**	1			
2.0	02.90 - 08.96	85	1984	4	2E	**CL001**	1			coil socket with 3 pins
						CL019	1			coil socket with 6 pins
2.0 Syncro	10.90 - 08.96	85	1984	4	2E	**CL001**	1			coil socket with 3 pins
						CL019	1			coil socket with 6 pins
2.0 16V	01.94 - 08.96	110	1984	4	ABF	**CL019**	1			
2.8 VR6	06.91 - 08.96	128	2792	6	AAA	**CL001**	1			with distributor
						CL021	1			without distributor
Passat (3B2)										
1.6	10.96 - 11.00	74	1595	4	ADP	**CL001**	1			engine code / with distributor
				4	AHL/ARM/ANA	**CL002**	1			engine code
1.8	10.96 - 11.00	92	1781	4	ADR/APT/ARG	**CL028**	1			semidirect / pencil / twin coil
1.8 Syncro/4motion	10.96 - 11.00	92	1781	4	ADR/APT/ARG	**CL028**	1			semidirect / pencil / twin coil
1.8 T	10.96 - 11.00	110	1781	4	AEB/ANB/APU	**CL004**	4	CP001	4	pencil
2.3 VR5	10.96 - 08.97	110	2324	5	AGZ	**CL020**	1			
2.3 VR5 Syncro/4motion	10.97 - 11.00	110	2324	5	AGZ	**CL020**	1			
2.8 Syncro	05.97 - 09.99	132	2771	6	AGE	**CL006**	1			
2.8 V6	05.97 - 09.99	132	2771	6	AGE	**CL006**	1			

VW Passat (3B2) ▶

model	year	kW	cm³	cyl	engine	coil	pcs	boot	pcs	info
VW										
Passat (3B2)										
2.8 V6	09.99 - 11.00	140	2771	6	BBG	**CL006**	1			
2.8 V6	08.96 - 11.00	142	2771	6	APR/ACK/AHA/AQD	**CL006**	1			
2.8 V6 Syncro/4motion	10.96 - 11.00	142	2771	6	APR/ACK/ALG/AHA/AQD	**CL006**	1			
Passat (3B3)										
1.6	11.00 - 05.05	75	1595	4	ALZ	**CL002**	1			
1.8 T 20V	11.00 - 05.05	110	1781	4	AWT/AWL	**CL005**	4			pencil
2.0	11.00 - 05.05	85	1984	4	AZM	**CL002**	1			
2.0	11.01 - 05.05	96	1984	4	ALT	**CL005**	4			pencil
2.0 4motion	11.00 - 05.05	85	1984	4	AZM	**CL002**	1			
2.3 V5	11.00 - 05.05	125	2324	5	AZX	**CL024**	5			pencil
2.3 V5 4motion	11.00 - 05.05	125	2324	5	AZX	**CL024**	5			pencil
2.8	05.02 - 05.03	142	2771	6	ATQ/AMX	**CL006**	1			
2.8 4motion	11.00 - 05.05	142	2771	6	ATQ/AMX	**CL006**	1			
4.0 W8 4motion	09.01 - 09.04	202	3999	8	BDP/BDN	**CL022**	8			pencil
Passat (3C2)										
1.6	05.05 - 07.10	75	1595	4	BSF/BSE	**CL002**	1			
1.4 TSI	05.07 - 07.10	90	1390	4	CAXA	**CL003**	4			pencil
1.4 TSI EcoFuel	01.09 - 07.10	110	1390	4	CDGA	**CL003**	4			pencil
1.6 FSI	03.05 - 06.08	85	1598	4	BLF	**CL003**	4			pencil
1.8 TSI	05.07 - 07.10	118	1798	4	BZB/CDAA	**CL011**	4			pencil
2.0 FSI	03.05 - 07.10	110	1984	4	BLY/BLR/BVZ/BVY	**CL011**	4			pencil
2.0 FSI	07.05 - 07.10	147	1984	4	BWA/BPY/AXX/CBFA/CAWB	**CL011**	4			pencil
2.0 FSI 4motion	09.05 - 07.10	110	1984	4	BVX/BLX/BLY	**CL011**	4			pencil
3.2 FSI 4motion	11.05 - 07.10	184	3168	6	AXZ	**CL016**	6			pencil
Passat (362)										
1.4 TSI	08.10 - 12.14	90	1390	4	CAXA	**CL003**	4			pencil
1.4 TSI	11.12 - 12.14	118	1390	4	CTHD	**CL003**	4			pencil
1.4 TSI EcoFuel	08.10 - 12.14	110	1390	4	CDGA	**CL003**	4			pencil
1.4 TSI MultiFuel	11.10 - 12.14	118	1390	4	CKMA	**CL003**	4			pencil
1.8 TSI	08.10 - 12.14	118	1798	4	CDAA	**CL011**	4			pencil
2.0 TSI	11.10 - 12.14	155	1984	4	CCZB	**CL011**	4			pencil
Passat (3G2)										
1.4 GTE Hybrid	06.15 -	115	1395	4	CUKC	**CL031**	4			pencil
1.4 TSI	11.14 -	92	1395	4	CZCA	**CL031**	4			pencil
1.4 TSI	11.14 -	110	1395	4	CZEA	**CL031**	4			pencil
1.4 TSI 4motion	02.15 -	110	1395	4	CZEA	**CL031**	4			pencil
1.8 TSI	02.15 -	132	1798	4	CJSA/CJSC	**CL032**	4			pencil
2.0 TSI	05.15 -	162	1984	4	CHHB	**CL032**	4			pencil
2.0 TSI 4motion	05.15 -	206	1984	4	CJXA	**CL032**	4			pencil
Passat Alltrack (365)										
1.8 TSI	01.12 -	112	1798	4	CDAB	**CL011**	4			pencil
1.8 TSI	01.12 -	118	1798	4	CDAA	**CL011**	4			pencil
2.0 TSI 4motion	01.12 -	155	1984	4	CCZB	**CL011**	4			pencil
Passat Alltrack (3G5)										
2.0 TSI 4motion	07.15 -	162	1984	4	CHHB	**CL032**	4			pencil
Passat CC (357)										
1.8 TSI	06.08 - 11.10	118	1798	4	BZB/CDAA	**CL011**	4			pencil
2.0 TSI	06.08 - 01.12	147	1984	4	CBFA/CCZA/CAWB/CCTA	**CL011**	4			pencil
Passat Sedan (32B)										
1.6	01.85 - 03.88	55	1595	4	DT	**CL018**	1			
1.8	01.85 - 03.88	66	1781	4	DS/JN	**CL018**	1			
Passat Variant (32B)										
1.6	01.85 - 03.88	55	1588	4	WV/YN	**CL018**	1			
1.8 Syncro	01.86 - 03.88	66	1781	4	DS/JN	**CL018**	1			
2.0 Syncro	05.84 - 03.88	85	1994	5	JS	**CL018**	1			
Passat Variant (3A5, 35I)										
1.6	04.88 - 12.88	55	1595	4	EZ	**CL018**	1			
1.6	07.94 - 12.95	74	1595	4	AFT	**CL001**	1			
1.8	08.90 - 05.97	55	1781	4	AAM	**CL001**	1			
1.8	02.88 - 05.97	66	1781	4	RP/ADZ	**CL001**	1			
1.8	04.88 - 07.92	82	1781	4	PB	**CL018**	1			
1.8 16V	04.88 - 12.89	100	1781	4	KR	**CL018**	1			
1.8 G60 Syncro	08.88 - 05.97	118	1781	4	PG	**CL018**	1			
2.0	03.95 - 08.96	79	1984	4	AEP	**CL001**	1			
2.0	02.90 - 05.97	85	1984	4	2E	**CL001**	1			coil socket with 3 pins
						CL019	1			coil socket with 6 pins
2.0 Syncro	10.90 - 05.97	85	1984	4	2E	**CL001**	1			coil socket with 3 pins
						CL019	1			coil socket with 6 pins
2.0 16V	01.94 - 05.97	110	1984	4	ABF	**CL019**	1			
2.8 VR6	06.91 - 05.97	128	2792	6	AAA	**CL001**	1			with distributor
						CL021	1			without distributor

VW Passat Variant (3A5, 35I) ▶

model	year	kW	cm³	cyl	engine	coil	pcs	boot	pcs	info
VW										
Passat Variant (3A5, 35I)										
2.9 VR6 Syncro	01.94 - 05.97	135	2861	6	ABV	**CL001**	1			with distributor
						CL021	1			without distributor
Passat Variant (3B5)										
1.6	06.97 - 11.00	74	1595	4	ADP	**CL001**	1			engine code / with distributor
				4	AHL/ARM/ANA	**CL002**	1			engine code
1.8	06.97 - 11.00	92	1781	4	ADR/APT/ARG	**CL028**	1			semidirect / pencil / twin coil
1.8 Syncro/4motion	06.97 - 11.00	92	1781	4	ADR/APT/ARG	**CL028**	1			semidirect / pencil / twin coil
1.8 T	06.97 - 11.00	110	1781	4	AEB/ANB/APU	**CL004**	4	CP001	4	pencil
2.3 VR5	06.97 - 11.00	110	2324	5	AGZ	**CL020**	1			
2.3 VR5 Syncro/4motion	10.97 - 11.00	110	2324	5	AGZ	**CL020**	1			
2.8 Syncro	05.97 - 09.99	132	2771	6	AGE	**CL006**	1			
2.8 V6	09.97 - 09.99	132	2771	6	AGE	**CL006**	1			
2.8 V6	06.97 - 11.00	142	2771	6	APR/ACK/AHA/AQD	**CL006**	1			
2.8 V6 Syncro/4motion	06.97 - 11.00	142	2771	6	APR/ACK/ALG/AHA/AQD	**CL006**	1			
Passat Variant (3B6)										
1.6	11.00 - 05.05	75	1595	4	ALZ	**CL002**	1			
1.8 T 20V	11.00 - 05.05	110	1781	4	AWT	**CL005**	4			pencil
2.0	11.00 - 05.05	85	1984	4	AZM	**CL002**	1			
2.0	11.01 - 05.05	96	1984	4	ALT	**CL005**	4			pencil
2.0 4motion	11.00 - 05.05	85	1984	4	AZM	**CL002**	1			
2.3 VR5	11.00 - 05.05	125	2324	5	AZX	**CL024**	5			pencil
2.3 VR5 4motion	11.00 - 05.05	125	2324	5	AZX	**CL024**	5			pencil
2.8 4motion	11.00 - 05.05	142	2771	6	ATQ/AMX	**CL006**	1			
4.0 W8 4motion	09.01 - 09.04	202	3999	8	BDP/BDN	**CL022**	8			pencil
Passat Variant (3C5)										
1.4 TSI	05.07 - 11.10	90	1390	4	CAXA	**CL003**	4			pencil
1.4 TSI EcoFuel	01.09 - 11.10	110	1390	4	CDGA	**CL003**	4			pencil
1.6	08.05 - 11.10	75	1595	4	BSF/BSE	**CL002**	1			
1.6 FSI	08.05 - 06.08	85	1598	4	BLF	**CL003**	4			pencil
1.8 TSI	05.07 - 10.11	118	1798	4	BZB/CDAA	**CL011**	4			pencil
2.0 FSI	08.05 - 11.10	110	1984	4	BLY/BLR/BVZ/BVY	**CL011**	4			pencil
2.0 FSI	08.05 - 11.10	147	1984	4	BWA/BPY/AXX/CBFA/CAWB	**CL011**	4			pencil
2.0 FSI 4motion	09.05 - 11.10	110	1984	4	BVX/BLX/BLY	**CL011**	4			pencil
3.6 R36 4motion	04.07 - 11.10	220	3597	6	BWS	**CL016**	6			pencil
Passat Variant (365)										
1.4 TSI	08.10 - 12.14	90	1390	4	CAXA	**CL003**	4			pencil
1.4 TSI	11.12 - 12.14	118	1390	4	CTHD	**CL003**	4			pencil
1.4 TSI EcoFuel	08.10 - 12.14	110	1390	4	CDGA	**CL003**	4			pencil
1.4 TSI MultiFuel	11.10 - 12.14	118	1390	4	CKMA	**CL003**	4			pencil
1.8 TSI	08.10 - 12.14	118	1798	4	CDAA	**CL011**	4			pencil
2.0 TSI	11.10 - 12.14	155	1984	4	CCZB	**CL011**	4			pencil
Passat Variant (3G5)										
1.4 GTE Hybrid	06.15 -	115	1395	4	CUKC	**CL031**	4			pencil
1.4 TSI	11.14 -	92	1395	4	CZCA	**CL031**	4			pencil
1.4 TSI	11.14 -	110	1395	4	CZEA	**CL031**	4			pencil
1.4 TSI 4motion	02.15 -	110	1395	4	CZEA	**CL031**	4			pencil
1.8 TSI	02.15 -	132	1798	4	CJSA/CJSC	**CL032**	4			pencil
2.0 TSI	05.15 -	162	1984	4	CHHB	**CL032**	4			pencil
2.0 TSI 4motion	05.15 -	206	1984	4	CJXA	**CL032**	4			pencil
Phaeton (3D_)										
3.2 V6	04.02 -	177	3189	6	AYT/BKL	**CL016**	6			pencil
3.2 V6 4motion	02.04 -	177	3189	6	BRK/BKL	**CL016**	6			pencil
4.2 V8 4motion	05.03 -	246	4172	8	BGJ/BGH	**CL017**	8			pencil
6.0 W12 4motion	04.02 -	309	5998	12	BAN	**CL022**	12			pencil
6.0 W12 4motion	05.05 -	331	5998	12	BTT/BRN	**CL022**	12			pencil
Polo (86C, 80)										
1.0	08.85 - 01.92	33	1043	4	HZ	**CL001**	1			coil socket with 3 pins
						CL019	1			coil socket with 6 pins
1.0 cat	08.89 - 09.94	33	1043	4	AAU/ACM	**CL001**	1			
1.3	06.84 - 09.89	55	1272	4	GK	**CL018**	1			
1.3 cat	07.87 - 10.90	40	1272	4	NZ/2G	**CL018**	1			year
	10.90 - 09.94	40	1272	4	NZ/2G	**CL001**	1			year / coil socket with 3 pins
	10.90 - 09.94	40	1272	4	NZ/2G	**CL019**	1			year / coil socket with 6 pins
1.3 cat	10.89 - 11.90	55	1272	4	3F	**CL001**	1			
Polo (6N1)										
45 1.0	10.94 - 09.96	33	1043	4	AEV	**CL001**	1			
50 1.0	09.96 - 10.99	37	999	4	AER/ALL	**CL001**	1			
55 1.3	10.94 - 07.95	40	1296	4	ADX	**CL001**	1			
55 1.4	08.95 - 10.99	40	1390	4	AEX	**CL001**	1			
60 1.4	07.95 - 10.99	44	1390	4	AEX/AKV	**CL001**	1			
75 1.6	10.94 - 10.99	55	1598	4	AEA/AEE	**CL001**	1			

VW Polo (6N1) ▶

model	year	kW	cm³	cyl	engine	coil	pcs	boot	pcs	info
VW										
Polo (6N1)										
100 1.4 16V	04.96 - 10.99	74	1390	4	AFH	**CL001**	1			
120 1.6 16V GTI	09.98 - 10.99	88	1598	4	AJV	**CL002**	1			
Polo (6N2)										
1.0	10.99 - 09.01	37	999	4	ALD/AUC	**CL002**	1			
1.4	10.99 - 09.01	40	1390	4	ANX/AKP	**CL002**	1			
1.4	10.99 - 09.01	44	1390	4	AUD	**CL002**	1			
1.4 16V	10.99 - 09.01	55	1390	4	AHW/APE/AUA	**CL002**	1			
1.4 16V	10.99 - 09.01	74	1390	4	AFK/AUB/AQQ	**CL002**	1			
1.6 16V GTI	10.99 - 09.01	92	1598	4	AVY	**CL002**	1			
Polo (9N_)										
1.2	01.02 - 05.07	40	1198	3	AWY/BMD	**CL009**	3			pencil
1.2	05.07 - 11.09	44	1198	3	BBM	**CL009**	3			pencil
1.2 12V	10.01 - 07.07	47	1198	3	AZQ/BME	**CL003**	3			pencil
1.2 12V	05.07 - 11.09	51	1198	3	BZG	**CL003**	3			pencil
1.4	06.05 - 11.09	63	1390	4		**CL003**	4			pencil
1.4 16V	10.01 - 05.08	55	1390	4	AUA	**CL002**	1			coil 4xPIN / engine code
				4	BBY/BKY	**CL003**	4			pencil / engine code
1.4 16V	05.06 - 11.09	59	1390	4	BUD	**CL003**	4			pencil
1.4 16V	10.01 - 05.08	74	1390	4	AUB	**CL002**	1			coil 4xPIN / engine code
				4	BBZ	**CL003**	4			pencil / engine code
1.4 FSI	02.02 - 07.06	63	1390	4	AXU	**CL003**	4			pencil
1.6	08.02 - 05.05	74	1598	4	BAH	**CL002**	1			
1.6 16V	05.06 - 11.09	77	1598	4	BTS	**CL003**	4			pencil
1.8 GTI	09.05 - 11.09	110	1781	4	BJX	**CL005**	4			pencil
1.8 GTi Cup Edition	05.06 - 11.09	132	1781	4	BBU	**CL005**	4			pencil
Polo (6R, 6C)										
1.0 TSI	11.14 -	70	999	3	CHZB	**CL031**	3			pencil
1.0 TSI	11.14 -	81	999	3	CHZC	**CL031**	3			pencil
1.2	06.09 -	44	1198	3	CGPB	**CL003**	3			pencil
1.2	06.09 -	51	1198	3	CGPA	**CL003**	3			pencil
1.2 TSI	05.11 - 05.14	66	1197	4	CBZC	**CL002**	1			
1.2 TSI 16V	07.14 -	66	1197	4	CJZC	**CL031**	4			pencil
1.2 TSI	11.09 -	77	1197	4	CBZB	**CL002**	1			
1.4	06.09 -	63	1390	4	CGGB/CLPA/CDDA	**CL003**	4			pencil
1.4 BiFuel	03.10 - 01.11	60	1390	4	CMAA	**CL003**	4			pencil
1.4 GTI	05.10 -	132	1390	4	CAVE/CTHE	**CL003**	4			pencil
1.4 TSI	10.12 -	103	1395	4	CPTA	**CL031**	4			pencil
1.6	07.14 -	81	1598	4	CWVA	**CL031**	4			pencil
1.6 BiFuel	01.11 -	60	1598	4	CNKA	**CL003**	4			pencil
1.8 GTI	11.14 -	141	1798	4	DAJA/DAJB	**CL032**	4			pencil
2.0 R WRC	08.13 -	162	1984	4	CDLJ	**CL011**	4			pencil
Polo Classic (86C, 80)										
1.0	08.86 - 09.94	33	1043	4	AAU/HZ/AAK	**CL001**	1			coil socket with 3 pins
						CL019	1			coil socket with 6 pins
1.3	08.85 - 07.87	40	1272	4	MH/HK	**CL001**	1			
1.3 cat	07.87 - 09.94	40	1272	4	NZ/MH	**CL001**	1			coil socket with 3 pins
						CL019	1			coil socket with 6 pins
Polo Classic (6KV2)										
1.0	08.96 - 12.01	37	999	4	AER	**CL001**	1			
60 1.4	12.95 - 09.01	44	1390	4	AEX/AKV	**CL001**	1			engine code / with distributor
				4	AKK/AUD	**CL002**	1			engine code
75 1.4 16V	10.99 - 09.01	55	1390	4	APE/AUA	**CL002**	1			
75 1.6	11.95 - 09.01	55	1598	4	ALM/AEE	**CL001**	1			
75 1.6	11.95 - 09.97	55	1595	4	1F	**CL001**	1			
90 1.8	01.97 - 09.01	66	1781	4	ADZ/ADD/ABS	**CL001**	1			
100 1.6	12.95 - 09.01	74	1595	4	AFT	**CL001**	1			engine code
				4	AKL/AEH	**CL002**	1			engine code
Polo Coupe (86C, 80)										
1.0	08.85 - 01.92	33	1043	4	HZ	**CL001**	1			coil socket with 3 pins
						CL019	1			coil socket with 6 pins
1.0 cat	08.89 - 09.94	33	1043	4	AAU/AAK/ACM	**CL001**	1			coil socket with 3 pins
						CL019	1			coil socket with 6 pins
1.3	03.91 - 09.94	57	1272	4	3F	**CL001**	1			
1.3 cat	07.87 - 08.94	40	1272	4	NZ/2G/MH/AAV	**CL001**	1			coil socket with 3 pins
						CL019	1			coil socket with 6 pins
1.3 cat	10.89 - 11.90	55	1272	4	3F	**CL001**	1			
1.3 G40	08.90 - 09.94	83	1272	4	PY	**CL001**	1			
Polo Sedan (9A4)										
1.0	08.96 - 12.01	37	999	4	AER	**CL001**	1			
1.4	07.03 -	55	1390	4	BBY/BKY	**CL003**	4			pencil
1.4	11.03 -	74	1390	4	BBZ	**CL003**	4			pencil

VW Polo Sedan (9A4) ▶

model	year	kW	cm³	cyl	engine	coil	pcs	boot	pcs	info
VW										
Polo Sedan (9A4)										
1.6	09.02 -	74	1598	4	BPA/CFZA/BAH	**CL002**	1			
Polo Sedan										
1.6	11.10 -	63	1598	4	CFNB	**CL003**	4			pencil
1.6	05.10 -	77	1598	4	CFNA/CLSA	**CL003**	4			pencil
Polo Van (86CF)										
1.0	08.92 - 07.94	33	1043	4	AAU	**CL001**	1			
1.3	08.92 - 07.94	40	1272	4	AAV	**CL019**	1			
Polo Van (6NF)										
1.0	10.94 - 12.99	33	1043	4	AEV	**CL001**	1			
1.4	05.98 - 12.99	44	1390	4	AEX	**CL001**	1			
Polo Variant (6KV5)										
1.4	12.98 - 09.01	40	1390	4	AKP	**CL002**	1			
1.4	05.97 - 09.01	44	1390	4	AEX/AKV	**CL001**	1			engine code / with distributor
				4	AKK/AUD	**CL002**	1			engine code
1.4 16V	10.99 - 09.01	55	1390	4	APE/AUA	**CL002**	1			
1.6	05.97 - 09.01	55	1598	4	ALM/AEE	**CL001**	1			
1.6	05.97 - 09.01	74	1595	4	AFT	**CL001**	1			engine code / with distributor
				4	AKL/AEH	**CL002**	1			engine code
1.8	05.97 - 09.01	66	1781	4	ADZ	**CL001**	1			
Scirocco (53B)										
1.6	01.83 - 12.89	55	1595	4	EW	**CL018**	1			
Scirocco (137, 138)										
1.4 TSI	08.08 -	90	1390	4	CMSB/CAXA	**CL003**	4			pencil
1.4 TSI	11.13 -	92	1395	4	CXSB/CZCA	**CL031**	4			pencil
1.4 TSI	05.08 -	118	1390	4	CTKA/CAVD/CTHD/CNWA	**CL003**	4			pencil
2.0 R	11.09 -	188	1984	4	CDLC	**CL011**	4			pencil
2.0 R	11.09 -	195	1984	4	CDLA	**CL011**	4			pencil
2.0 R	05.14 -	206	1984	4	CDLK	**CL011**	4			pencil
2.0 TSI	11.13 -	132	1984	4	CULA	**CL032**	4			pencil
2.0 TSI	05.08 - 11.09	147	1984	4	CAWB	**CL011**	4			pencil
2.0 TSI	11.09 -	155	1984	4	CCZB	**CL011**	4			pencil
2.0 TSI	11.13 -	162	1984	4	CULC	**CL032**	4			pencil
Sharan (7M8, 7M9, 7M6)										
1.8 T 20V	09.97 - 03.10	110	1781	4	AJH	**CL004**	4	CP001	4	pencil / engine code
	04.00 - 03.10	110	1781	4	AWC	**CL014**	4			year / pencil / engine code
2.0	09.95 - 03.10	85	1984	4	ADY	**CL001**	1			with distributor
						CL002	1			without distributor
2.0 LPG	04.06 - 03.10	85	1984	4	ATM	**CL002**	1			
2.8 V6 24V	04.00 - 03.10	150	2792	6	AYL	**CL023**	6			pencil
2.8 V6 24V 4motion	04.00 - 03.10	150	2792	6	AYL	**CL023**	6			pencil
2.8 VR6	09.95 - 04.00	128	2792	6	AAA	**CL021**	1			
2.8 VR6 Syncro	11.96 - 04.00	128	2792	6	AAA	**CL021**	1			
Sharan (7N1, 7N2)										
1.4 TSI	05.10 -	110	1390	4	CTHA/CNWB/CAVA	**CL003**	4			pencil
1.4 TSI	05.15 -	110	1395	4	CZDA	**CL031**	4			pencil
2.0 TSI	12.10 -	147	1984	4	CCZA	**CL011**	4			pencil
2.0 TSI	05.15 -	162	1984	4	DEDA	**CL032**	4			pencil
Taro										
2.4 i 4x4	06.89 - 03.97	84	2366	4	22R	**CL578**	1			
Tiguan (5N_)										
1.4 TSI	08.10 -	90	1390	4	CAXA	**CL003**	4			pencil
1.4 TSI	05.15 -	92	1395	4	CZDB	**CL031**	4			pencil
1.4 TSI	05.08 -	110	1390	4	BWK/CTHA/CAVA	**CL003**	4			pencil
1.4 TSI	05.11 -	118	1390	4	CAVD/CTHD	**CL003**	4			pencil
1.4 TSI 4motion	09.07 -	110	1390	4	BWK/CTHA/CAVA	**CL003**	4			pencil
1.4 TSI 4motion	05.11 -	118	1390	4	CAVD/CTHD	**CL003**	4			pencil
2.0 TFSI 4motion	09.07 -	125	1984	4	CAWA/CCZC	**CL011**	4			pencil
2.0 TFSI 4motion	09.07 -	147	1984	4	CCZA/CAWB/CCTA	**CL011**	4			pencil
2.0 TSI 4motion	05.11 -	132	1984	4	CCZD	**CL011**	4			pencil
2.0 TSI 4motion	05.11 -	155	1984	4	CCZB	**CL011**	4			pencil
Touareg (7LA, 7L6, 7L7)										
3.2 V6	10.02 - 11.06	162	3189	6	AZZ/BMV/BKJ/BAA/BMX/BRJ	**CL016**	6			pencil
3.2 V6	11.04 - 11.06	177	3189	6	BMV	**CL016**	6			pencil
3.6 V6 FSI	10.05 - 05.10	206	3597	6	BHL/BHK	**CL016**	6			pencil
4.2 V8	12.02 - 11.06	228	4172	8	AXQ/BHX	**CL017**	8			pencil
6.0 W12	08.04 - 05.10	331	5998	12	CFRA/BJN	**CL022**	12			pencil
Touareg (7P5)										
3.0 V6 TSI Hybrid	04.10 -	245	2995	6	CGFA/CGEA	**CL015**	6			pencil
4.2 V8 FSI	01.11 -	265	4163	8	CGNA	**CL015**	8			pencil
Touran (1T1, 1T2)										
1.4 FSI	11.06 - 05.10	125	1390	4	BLG/CAVB	**CL003**	4			pencil

VW Touran (1T1, 1T2) ▶

model	year	kW	cm³	cyl	engine	coil	pcs	boot	pcs	info
VW										
Touran (1T1, 1T2)										
1.4 TSI	02.06 - 05.10	103	1390	4	BMY	**CL003**	4			pencil
1.4 TSI EcoFuel	05.09 - 05.10	110	1390	4	CDGA	**CL003**	4			pencil
1.6	07.03 - 05.10	75	1595	4	BGU/BSF/BSE	**CL002**	1			
1.6 FSI	02.03 - 01.07	85	1598	4	BLF/BLP/BAG	**CL003**	4			pencil
2.0 EcoFuel	02.06 - 05.09	80	1984	4	BSX	**CL010**	1			
2.0 FSI	10.03 - 11.05	110	1984	4	BLX/BLY/BLR/AXW/BVZ/BVY	**CL011**	4			pencil
Touran (1T3)										
1.2 TSI	05.10 -	77	1197	4	CBZB	**CL002**	1			
1.4 TSI	05.10 -	103	1390	4	CTHC/CAVC	**CL003**	4			pencil
1.4 TSI	05.10 -	125	1390	4	CTHB/CAVB	**CL003**	4			pencil
1.4 TSI EcoFuel	05.10 -	110	1390	4	CDGA	**CL003**	4			pencil
Touran										
1.2 TSI	09.15 -	81	1197	4	CYVB	**CL031**	4			pencil
1.4 TSI	09.15 -	110	1395	4	CZDA	**CL031**	4			pencil
Transporter IV Bus (70XB, 70XC, 7DB, 7DW)										
1.8	12.90 - 07.92	49	1781	4	PD	**CL001**	1			coil socket with 3 pins
						CL019	1			coil socket with 6 pins
2.0	09.90 - 04.03	62	1968	4	AAC	**CL001**	1			coil socket with 3 pins
						CL019	1			coil socket with 6 pins
2.5	11.90 - 04.03	81	2461	5	AEN/AAF/ACU/AEU	**CL001**	1			
2.5	08.96 - 04.03	85	2461	5	AET	**CL001**	1			
2.5 Syncro	11.92 - 04.03	81	2461	5	AEN/AAF/ACU/AEU	**CL001**	1			
2.5 Syncro	07.96 - 04.03	85	2461	5	AET	**CL001**	1			
2.8 VR 6	11.95 - 04.00	103	2792	6	AES	**CL021**	1			
2.8 VR6	04.00 - 04.03	150	2792	6	AMV	**CL021**	1			
2.8 VR6 Syncro	01.96 - 04.96	103	2792	6	AES	**CL021**	1			
Transporter IV Flatbed (70XD)										
2.0	07.90 - 04.03	62	1968	4	AAC	**CL001**	1			coil socket with 3 pins
						CL019	1			coil socket with 6 pins
2.5	11.90 - 04.03	81	2461	5	AEN/AAF/ACU/AEU	**CL001**	1			
2.5	08.96 - 04.03	85	2461	5	AET	**CL001**	1			
2.5 Syncro	10.92 - 04.03	81	2461	5	AEN/AAF/ACU/AEU	**CL001**	1			
2.5 Syncro	08.96 - 04.03	85	2461	5	AET	**CL001**	1			
2.8	05.96 - 05.00	103	2792	6	AES	**CL021**	1			
Transporter IV Van (70XA)										
2.0	07.90 - 04.03	62	1968	4	AAC	**CL001**	1			coil socket with 3 pins
						CL019	1			coil socket with 6 pins
2.5	11.90 - 04.03	81	2461	5	AEN/AAF/ACU/AEU	**CL001**	1			
2.5	08.96 - 04.03	85	2461	5	AET	**CL001**	1			
2.5 Syncro	10.92 - 04.03	81	2461	5	AEN/AAF/ACU/AEU	**CL001**	1			
2.5 Syncro	08.96 - 04.03	85	2461	5	AET	**CL001**	1			
2.8 VR6	05.96 - 05.00	103	2792	6	AES	**CL021**	1			
Transporter V Bus (7HB, 7HJ, 7EB, 7EJ, 7EF)										
2.0	11.03 -	85	1984	4	AXA	**CL002**	1			
3.2 V6	02.04 - 06.04	170	3189	6	BDL	**CL016**	6			pencil
3.2 V6	02.04 - 11.09	173	3189	6	BKK/CFLA	**CL016**	6			pencil
3.2 V6 4motion	11.03 - 11.09	173	3189	6	BKK/CFLA	**CL016**	6			pencil
Transporter V Flatbed (7JD, 7JE, 7JL, 7JY, 7JZ,										
2.0	11.03 -	85	1984	4	AXA	**CL002**	1			
3.2 V6	02.04 - 11.09	170	3189	6	BDL	**CL016**	6			pencil
3.2 V6	08.03 - 05.06	173	3189	6	BKK	**CL016**	6			pencil
Transporter V Van (7HA, 7HH, 7EA, 7EH)										
2.0	11.03 -	85	1984	4	AXA	**CL002**	1			
3.2 V6	04.03 - 06.04	170	3189	6	BDL	**CL016**	6			pencil
3.2 V6	02.04 - 11.09	173	3189	6	BKK/CFLA	**CL016**	6			pencil
3.2 4motion	11.03 - 11.09	173	3189	6	BKK/CFLA	**CL016**	6			pencil
Transporter T6 Bus (SGB_)										
2.0 TSI	04.15 -	110	1984	4	CJKB	**CL011**	4			pencil
2.0 TSI	04.15 -	150	1984	4	CJKA	**CL011**	4			pencil
2.0 TSI 4motion	06.15 -	150	1984	4	CJKA	**CL011**	4			pencil
Transporter T6 Van (SGA, SGH)										
2.0 TSI	04.15 -	110	1984	4	CJKB	**CL011**	4			pencil
2.0 TSI	04.15 -	150	1984	4	CJKA	**CL011**	4			pencil
2.0 TSI 4motion	06.15 -	150	1984	4	CJKA	**CL011**	4			pencil
Transporter T6 Flatbed (SFD_)										
2.0 TSI	04.15 -	110	1984	4	CJKB	**CL011**	4			pencil
Up										
1.0	08.11 -	44	999	3	CHYA	**CL031**	3			pencil
1.0	08.11 -	55	999	3	CHYB	**CL031**	3			pencil
1.0 EcoFuel	11.12 -	50	999	3	CPGA	**CL031**	3			pencil

model	year	kW	cm³	cyl	engine	coil	pcs	boot	pcs	info
VW										
Vento (1H2)										
1.4	11.91 - 09.98	40	1390	4	ABD	**CL001**	1			
1.4	11.91 - 09.98	44	1390	4	AEX/ABD	**CL001**	1			
1.6	09.92 - 09.98	55	1598	4	ABU/AEA/AEE	**CL001**	1			coil socket with 3 pins
						CL019	1			coil socket with 6 pins
1.6	10.94 - 09.98	74	1595	4	AEK	**CL001**	1			
1.8	11.91 - 09.98	55	1781	4	AAM	**CL001**	1			
1.8	11.91 - 09.98	66	1781	4	ABS, ADZ	**CL001**	1			
2.0	11.91 - 09.98	85	1984	4	ADY/AKR/AGG	**CL001**	1			
2.8 VR6	01.92 - 09.98	128	2792	6	AAA	**CL001**	1			with distributor
						CL021	1			without distributor
ZAZ										
Lanos CC										
1.4	10.04 -	55	1349	4	A13SM	**CL201**	1			
1.5	10.04 -	63	1498	4	A15SM	**CL201**	1			
1.6 16V	10.04 -	78	1598	4	A16DMS	**CL201**	1			
Lanos Pick-up										
1.4	10.04 -	55	1349	4	A13SM	**CL201**	1			
1.5	10.04 -	63	1498	4	A15SM	**CL201**	1			
Lanos Sedan										
1.4	10.04 -	55	1349	4	A13SM	**CL201**	1			
1.5	10.04 -	63	1498	4	A15SM	**CL201**	1			
1.6 16V	10.04 -	78	1598	4	A16DMS	**CL201**	1			

Marking of coils
Обозначение катушек
Typové označení cívek

Original number of car producer
Обозначение производителя автомобилей
Označení dílu výrobcem automobilů

CL309

PIN

OEM-No.

FIAT 55200112
55200486
55208723
FORD 1535713
1671690
9S51-12029-AA

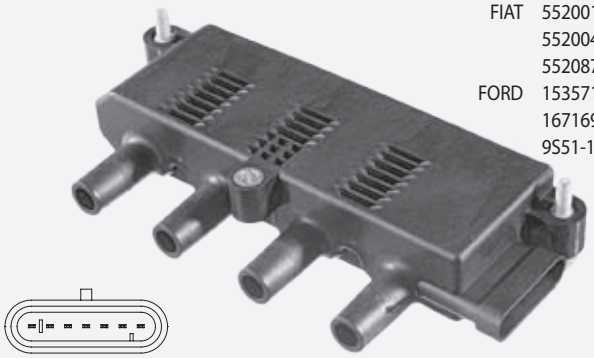

ALFA ROMEO				
Mito (955)	1.4	05.11-	51	955 A9.000
FIAT				
500 (312)	1.2	10.07-	51	169 A4.000
	1.2 LPG	12.10-	51	169 A4.000

car / van make and model (body design)
марка и модель автомобиля (тип кузова)
značka a model osobního (užitkového) automobilu (typ karoserie)

year of production
год производства
rok výroby

engine power (kW)
мощность двигателя (kW)
výkon a objem motoru (kW)

type of engine
тип двигателя
typ motoru

connector with pins
разъем с контактами
konektor s kontakty

type of connection
тип присоединения
způsob připojení

Used designations / Использованные термины / Použité výrazy

- **coil without COP boot**
  катушка без наконечника
  cívka bez koncovky

- **spare boot CP036**
  тип запасного наконечника
  typ náhradní koncovky

- **1 coil per cylinder**
  1 катушка на каждый цилиндр
  1 cívka na válec

- **2 coils per vehicle**
  2 катушки на машине
  2 cívky pro automobil

- **for cylinder 1 & 3 & 5**
  катушка на цилиндры 1 & 3 & 5
  cívka na válce 1 & 3 & 5

- **semidirect**: 2 coils (CL404) and ignition lead set T471G
  2 катушки (CL404) и 1 комплект проводов зажигания T471G (комбинированная система зажигания)
  2 cívky (CL404) a sada zapalovacích kabelů T471G (kombinovaný zapalovací systém)

- **color of socket** - black, brown, grey
  цвет разъема: чёрный, коричневый, серый
  barva zásuvky: černá, hnědá, šedá

- **lengths of cables** - 47-42-42-42 cm
  длина проводов: 47-42-42-42 cm
  délka kabelů: 47-42-42-42 cm

- **old design**
  старый вариант
  starší provedení

- **new desig**n
  новый вариант
  nové provedení

- **top cover**
  верхняя крышка
  horní kryt

PSA = Citroen / Peugeot
VAG = Volkswagen Group
Kompr. = Kompressor
cat = catalysator

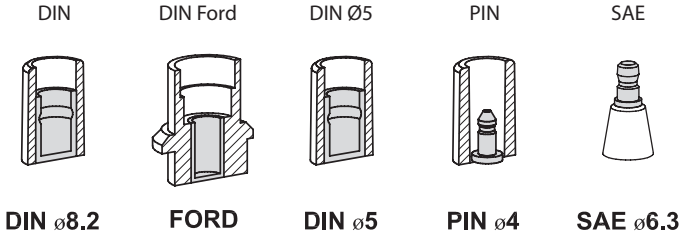

CL001

PIN

OEM-No.

SEAT 867 905 104
SKODA 6N0 905 104
004 050 016
VW 6N0 905 104
357 905 104
867 905 104A

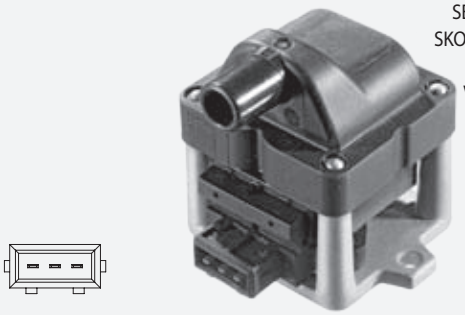

AUDI				
80 (8C, B4)	1.6	09.91-12.94	52	ABM
	2.0	09.91-12.94	66	ABT
	2.0 E	09.91-12.94	85	ABK
	2.0 E quattro	09.91-12.94	85	ABK
80 Avant (8C, B4)	2.0	07.92-01.96	66	ABT
	2.0 E	07.92-01.96	85	ABK
100 (4A, C4)	2.0	12.90-06.94	74	AAE
100 Avant (4A, C4)	2.0 E	09.91-06.94	74	AAE
A6 (4A, C4)	2.0	06.94-10.97	85	ABK
Cabriolet (8G7, B4)	2.0 E	01.93-07.98	85	ABK
Coupe (89, 8B)	2.0	05.89-12.96	85	AAD
SEAT				
Alhambra	2.0 i	04.96-03.10	85	ADY
Arosa (6H)	1.0	05.97-06.04	37	AER
	1.4	05.97-06.04	44	AEX
Cordoba (6K1, 6K2)	1.0 i	09.96-06.99	37	AER
	1.4	12.97-04.99	40	ANX
	1.4 i	06.94-06.99	44	AEX/AKV/ABD
	1.4 i 16V	09.96-06.99	74	AFH
	1.6 i	05.94-06.99	55	1F
	1.6 i	02.93-06.99	55	ABU/ALM/AEE
	1.6 i	07.96-10.99	74	AKL/AFT
	1.8 i	02.93-06.99	66	ADZ/ABS
	1.8 i 16V	10.93-08.96	95	ADL
	2.0 i	02.93-06.99	85	2E
	2.0 i 16V	08.96-06.99	110	ABF
Cordoba (6K2)	1.6	06.99-10.02	55	ALM
Cordoba Vario (6K5)	1.4 i	09.96-06.99	44	AEX/AKV
	1.6	06.99-12.02	55	ALM
	1.6 i	09.96-06.99	55	ALM/AEE
	1.6 i	05.97-06.99	55	1F
	1.6 i	09.96-06.99	74	AFT
Ibiza II (6K1)	1.0	03.93-09.96	33	AAU
	1.0 i	09.96-08.99	37	AER
	1.3 i	03.93-08.99	40	2G/AAV
	1.4 i	09.93-08.99	44	AEX/AKV/ABD/APQ
	1.4 i 16V	06.97-08.99	74	AFH
	1.6 i	09.94-06.99	55	1F
	1.6 i	03.93-08.99	55	ABU/ALM/AEE
	1.6 i	04.96-08.99	74	AFT
	1.8 i	03.93-08.99	66	ADZ/ABS
	1.8 i 16V	11.93-08.96	95	ADL
	2.0 i	03.93-08.99	85	2E/AGG
	2.0 i 16V	08.96-08.99	110	ABF
Ibiza III (6K1)	1.6	08.99-02.02	55	ALM
Inca (6K9)	1.4 i	11.95-06.03	44	AEX/AKV
	1.6 i	11.95-05.98	55	1F
	1.6 i	06.97-09.00	55	ALM/AEE
Toledo I (1L)	1.6 i	05.91-12.93	52	1F
	1.6 i	05.91-03.99	54	EZ/ABN/1F
	1.6 i	01.93-03.99	55	1F
	1.6 i	11.96-03.99	74	AFT
	1.8 i	11.93-12.96	66	ADZ/ABS
	2.0 i	05.91-03.99	85	2E
	2.0 i 16V	11.93-03.99	110	ABF
SKODA				
Favorit (781)	1.3 SPI	03.93-06.95	40	781.135B
	1.3 SPI	03.93-06.95	50	781.136B

< CL001

SKODA				
Favorit Forman (785)	1.3 SPI	03.93-06.95	40	781.135B
	1.3 SPI	03.93-06.95	50	781.136B
Favorit Pick-up (787)	1.3 SPI	03.93-06.95	40	781.135B
	1.3 SPI	03.93-06.95	50	781.136B
Felicia I (6U1)	1.3	10.94-03.98	40	135B/AMG
	1.3	10.94-03.98	50	136B/AMH
	1.6 LX	08.95-03.98	55	EA111/AEE
Felicia I Combi (6U5)	1.3 LX	08.95-03.98	40	135B/AMG
	1.3 LXI	08.95-03.98	50	136B/AMH
	1.6 GLX	08.95-03.98	55	AEE
Felicia I Pick-up (797)	1.3	06.97-04.02	40	135B/135M/AMG
	1.3	06.97-04.02	50	136B/136M/AMH
	1.6	06.97-04.02	55	AEE
Felicia II (6U1)	1.6	01.98-06.01	55	AEE
Felicia II Combi	1.6	01.98-06.01	55	AEE
Octavia (1U2)	1.6	09.96-09.04	55	AEE
Octavia Combi (1U5)	1.6	07.98-09.04	55	AEE
VW				
Caddy II Combi	1.4	11.95-01.04	44	AEX/AKV/APQ
	1.6	11.95-05.97	55	1F
	1.6	06.97-09.00	55	AEE
Caddy II Pick-up	1.6	06.96-12.00	55	AEE
Caddy II Van (9K9A)	1.4 60	11.95-01.04	44	AEX/APQ
	1.6 75	11.95-09.00	55	AEE
	1.6 75	11.95-05.97	55	1F
Corrado (53I)	2.0 i	04.93-12.95	85	2E
	2.0 i 16V	08.91-12.95	100	9A
	2.9 VR6	08.91-12.95	140	ABV
Golf II (19E, 1G1)	1.3 cat	06.86-12.92	40	NZ
Golf III (1H1)	1.4	11.91-08.97	40	AEX/ABD
	1.4	10.91-08.97	44	AEX/ABD
	1.6	09.92-08.97	55	ABU/AEA/AEE
	1.6	07.95-08.97	74	AEK/AFT/AKS
	1.8	11.91-08.97	55	AAM
	1.8	11.91-08.97	66	ACC/ADZ/ABS
	1.8 Syncro	01.93-08.97	66	ADZ/ABS
	2.0	11.91-08.97	85	ADY/AKR/AGG
	2.0 Syncro	08.95-08.97	85	AGG
	2.0 GTI 16V	08.92-08.97	110	ABF
	2.8 VR6	01.92-08.97	128	AAA
	2.9 VR6 Syncro	10.94-08.97	140	ABV
Golf III Cabriolet	1.6	10.94-05.98	74	AEK/AFT/AKS
	1.8	07.93-05.98	55	AAM
	1.8	07.93-05.98	66	ADZ/ABS
	2.0	07.93-05.98	85	ADY/AKR/AGG
Golf III Variant (1H5)	1.4	07.93-04.99	40	ABD
	1.4	07.93-04.99	44	AEX/ABD/APQ
	1.6	07.94-04.99	74	AFT/AKS
	1.8	07.93-04.99	55	ANN/AAM
	1.8	07.93-04.99	66	ADZ/ANP
	1.8 Syncro	10.94-04.99	66	ADZ
	2.0	07.93-04.99	85	ADY/AKR/AGG
	2.0 Syncro	08.95-04.99	85	AGG
	2.9 VR6 Syncro	10.94-04.99	140	ABV
Golf IV Cabriolet	1.6	06.98-06.02	74	AFT/AKS
	1.8	06.98-06.02	55	ANN/AAM
	1.8	06.98-06.02	66	ADZ/ANP
	2.0	06.98-06.02	85	AKR/AGG
Lupo (6X1, 6E1)	1.0	09.98-07.05	37	AER/ALL
Passat (3A2, 35I)	1.6	10.94-08.96	74	AEK/AFT
	1.8	08.90-08.96	55	AAM
	1.8	02.88-08.96	66	RP/ADZ
	2.0	03.95-08.96	79	AEP
	2.0	02.90-08.96	85	2E
	2.0 Syncro	10.90-08.96	85	2E
	2.8 VR6	06.91-08.96	128	AAA
Passat (3B2)	1.6	10.96-11.00	74	ADP
Passat Variant (3A5)	1.6	07.94-12.95	74	AFT
	1.8	08.90-05.97	55	AAM
	1.8	02.88-05.97	66	RP/ADZ
	2.0	03.95-08.96	79	AEP

CL001 ▶

< CL001

VW				
Passat Variant (3A5)	2.0	02.90-05.97	85	2E
	2.0 Syncro	10.90-05.97	85	2E
	2.8 VR6	06.91-05.97	128	AAA
	2.9 VR6 Syncro	01.94-05.97	135	ABV
Passat Variant (3B5)	1.6	06.97-11.00	74	ADP
Polo (86C, 80)	1.0	08.85-01.92	33	HZ
	1.0 cat	08.89-09.94	33	AAU/ACM
	1.3 cat	10.90-09.94	40	NZ/2G
	1.3 cat	10.89-11.90	55	3F
Polo (6N1)	45 1.0	10.94-09.96	33	AEV
	50 1.0	09.96-10.99	37	AER/ALL
	55 1.3	10.94-07.95	40	ADX
	55 1.4	08.95-10.99	40	AEX
	60 1.4	07.95-10.99	44	AEX/AKV
	75 1.6	10.94-10.99	55	AEA/AEE
	100 1.4 16V	04.96-10.99	74	AFH
Polo Classic (86C, 80)	1.0	08.86-09.94	33	AAU/HZ/AAK
	1.3	08.85-07.87	40	MH/HK
	1.3 cat	07.87-09.94	40	NZ/MH
Polo Classic (6KV2)	1.0	08.96-12.01	37	AER
	60 1.4	12.95-09.01	44	AEX/AKV
	75 1.6	11.95-09.01	55	ALM/AEE
	75 1.6	11.95-09.97	55	1F
	90 1.8	01.97-09.01	66	ADZ/ADD/ABS
	100 1.6	12.95-09.01	74	AFT
Polo Coupe (86C, 80)	1.0	08.85-01.92	33	HZ
	1.0 cat	08.89-09.94	33	AAU/AAK/ACM
	1.3	03.91-09.94	57	3F
	1.3 cat	07.87-08.94	40	NZ/2G/MH/AAV
	1.3 cat	10.89-11.90	55	3F
	1.3 G40	08.90-09.94	83	PY
Polo Sedan (9A4)	1.0	08.96-12.01	37	AER
Polo Van (86CF)	1.0	08.92-07.94	33	AAU
Polo Van (6NF)	1.0	10.94-12.99	33	AEV
	1.4	05.98-12.99	44	AEX
Polo Variant (6KV5)	1.4	05.97-09.01	44	AEX/AKV
	1.6	05.97-09.01	55	ALM/AEE
	1.6	05.97-09.01	74	AFT
	1.8	05.97-09.01	66	ADZ
Sharan (7M_)	2.0	09.95-03.10	85	ADY
Transporter IV Bus	1.8	12.90-07.92	49	PD
	2.0	09.90-04.03	62	AAC
	2.5	11.90-04.03	81	AEN/AAF/ACU/AEU
	2.5	08.96-04.03	85	AET
	2.5 Syncro	11.92-04.03	81	AEN/AAF/ACU/AEU
	2.5 Syncro	07.96-04.03	85	AET
Transporter IV Flatbed	2.0	07.90-04.03	62	AAC
	2.5	11.90-04.03	81	AEN/AAF/ACU/AEU
	2.5	08.96-04.03	85	AET
	2.5 Syncro	10.92-04.03	81	AEN/AAF/ACU/AEU
	2.5 Syncro	08.96-04.03	85	AET
Transporter IV Van	2.0	07.90-04.03	62	AAC
	2.5	11.90-04.03	81	AEN/AAF/ACU/AEU
	2.5	08.96-04.03	85	AET
	2.5 Syncro	10.92-04.03	81	AEN/AAF/ACU/AEU
	2.5 Syncro	08.96-04.03	85	AET
Vento (1H2)	1.4	11.91-09.98	40	ABD
	1.4	11.91-09.98	44	AEX/ABD
	1.6	09.92-09.98	55	ABU/AEA/AEE
	1.6	10.94-09.98	74	AEK
	1.8	11.91-09.98	55	AAM
	1.8	11.91-09.98	66	ABS, ADZ
	2.0	11.91-09.98	85	ADY/AKR/AGG
	2.8 VR6	01.92-09.98	128	AAA

CL002

PIN

OEM-No.

SEAT 032 905 106B
SKODA 032 905 106B
VW 032 905 106
032 905 106B
032 905 106D
032 905 106E

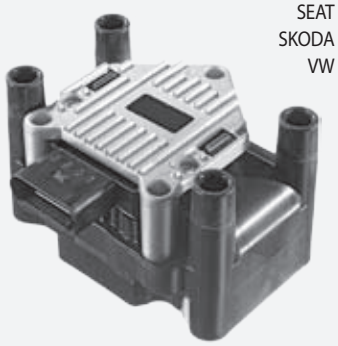

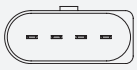

AUDI				
A1 (8X1, 8XF)	1.2 TFSI	05.10-	63	CBZA
A1 Sportback (8X_)	1.2 TFSI	01.12-	63	CBZA
A2 (8Z0)	1.4	02.00-08.05	55	AUA
A3 (8L1)	1.6	09.96-05.03	74	AKL/APF/AEH
	1.6	08.00-05.03	75	AVU/BFQ
	1.8	09.96-05.03	92	AGN/APG
A3 (8P1)	1.2 TSI	04.10-08.12	77	CBZB
	1.6	05.03-08.12	75	BGU
A3 Cabriolet (8P7)	1.2 TFSI	03.10-05.13	77	CBZB
	1.6	09.08-05.10	75	BSE
A3 Sportback (8PA)	1.2 TSI	04.10-03.13	77	CBZB
	1.6	09.04-03.13	75	BGU
A4 (8D2, B5)	1.6	11.94-10.00	74	AHL/ARM/ANA
	1.6	07.00-11.00	75	ALZ
A4 (8E2, B6)	1.6	11.00-12.04	75	ALZ
A4 (8EC, B7)	1.6	11.04-06.08	75	ALZ
A4 Avant (8D5, B5)	1.6	11.94-09.01	74	AHL/ARM/ANA
	1.6	07.00-09.01	75	ALZ
A4 Avant (8E5, B6)	1.6	09.01-12.04	75	ALZ
A4 Avant (8ED, B7)	1.6	11.04-06.08	75	ALZ
SEAT				
Alhambra	2.0 i	04.96-03.10	85	ATM
Altea (5P1)	1.2 TSI	04.10-	77	CBZB
	1.6	03.04-	75	BGU/BSF/_E/CMXA
	1.6 LPG	09.09-	75	CHGA
Altea XL (5P5, 5P8)	1.2 TSI	04.10-	77	CBZB
	1.6	10.06-	75	BSF/CMXA/BSE
	1.6 LPG	09.09-	75	CHGA
Arosa (6H)	1.0	05.97-06.04	37	ANV/AUC
	1.4	05.97-06.04	44	ANW/AUD
	1.4 16V	01.00-06.04	74	AFK/AUB/AQQ
Cordoba (6K2)	1.0	06.99-10.02	37	ANV/ALD/AUC
	1.4	06.99-10.02	44	ANW/AKK/AUD
	1.4 16V	05.00-10.02	55	APE/AUA
	1.4 16V	02.00-10.02	74	AUB/AQQ
	1.6	06.99-10.02	74	AKL/APF/AEH
Cordoba (6L2)	1.6	04.03-11.09	74	BAH
	2.0	09.02-11.09	85	AZL/BBX
Cordoba Vario (6K5)	1.4	06.99-12.02	44	ANW/AKK/AUD
	1.4 16V	06.99-12.02	55	APE/AUA
	1.6	06.99-12.02	74	AKL/APF/AEH/AUR
Exeo (3R2)	1.6	03.09-09.10	75	ALZ
	1.8 T	12.08-05.10	110	CFMA
Exeo ST (3R5)	1.6	06.09-09.10	75	ALZ
	1.8 T	06.09-05.10	110	CFMA
Ibiza III (6K1)	1.0	08.99-02.02	37	ANV/ALD/AUC
	1.4	08.99-02.02	44	ANW/AKK/AUD
	1.4 16V	05.00-02.02	55	APE/AUA
	1.4 16V	08.99-02.02	74	AUB/AQQ
	1.6	08.99-02.02	74	AKL/APF/AEH/AUR
Ibiza IV (6L1)	1.4 16V	02.02-11.09	74	AUB
	1.6	02.03-11.09	74	BAH
	2.0	04.02-11.09	85	AZL/BBX
Ibiza V (6J5, 6P5)	1.2 TSI	09.10-	77	CBZB
Ibiza V SportCoupe	1.2 TSI	09.10-	77	CBZB
Ibiza V ST (6J8, 6P8)	1.2 TSI	09.12-	63	CBZA
	1.2 TSI	09.10-	77	CBZB

< CL002

SEAT				
Inca (6K9)	1.4 16V	04.00-06.03	55	AUA
	1.4 i	11.95-06.03	44	AUD
Leon (1M1)	1.4 16V	11.99-06.06	55	AHW/AXP/APE
	1.6	11.99-06.06	74	AKL/APF/AEH
	1.6	10.05-06.06	75	BGU/BFQ
	1.6 16V	09.00-06.06	77	AUS
	1.8 20V	11.99-06.06	92	AGN/APG
Leon (1P1)	1.2 TSI	02.10-	77	CBZB
	1.6	07.05-	75	CCSA/BSF/CMXA/BSE
	1.6 LPG	12.09-	75	CHGA
Toledo II (1M2)	1.4 16V	01.00-05.02	55	AHW/AXP/APE/AUA
	1.6	10.98-07.04	74	AKL/APF/AEH
	1.6 16V	06.00-05.06	77	AUS
	1.8 20V	10.98-07.04	92	AGN/APG
Toledo III (5P2)	1.6	10.04-05.09	75	BGU/BSF/BSE
Toledo IV (KG3)	1.2 TSI	07.12-	63	CBZA
	1.2 TSI	07.12-	77	CBZB
SKODA				
Fabia (6Y2)	1.4 16V	12.99-03.08	55	AUA
	1.4 16V	12.99-03.08	74	AUB
	2.0	12.99-03.08	85	AZL
Fabia	1.2 TSI	03.10-12.14	63	CBZA
	1.2 TSI	03.10-12.14	77	CBZB
Fabia Combi (6Y5)	1.4 16V	05.00-12.07	55	AUA
	1.4 16V	04.00-12.07	74	AUB
	2.0	04.00-12.07	85	AZL
Fabia Combi	1.2 TSI	03.10-12.14	63	CBZA
	1.2 TSI	03.10-12.14	77	CBZB
Fabia Sedan (6Y3)	1.4 16V	10.99-12.07	55	AUA
	1.4 16V	12.99-12.07	74	AUB
	2.0	12.99-12.07	85	AZL
Octavia (1U2)	1.4 16V	09.00-12.10	55	AXP/BCA
	1.6	02.97-12.07	74	AKL/AEH
	1.6	11.00-12.10	75	AVU/BFQ
	1.8	09.96-07.00	92	AGN
	2.0	04.99-05.07	85	APK/AZH/AZJ/AQY/AEG
Octavia (1Z3)	1.2 TSI	02.10-06.13	77	CBZB
	1.6	06.04-06.13	75	BGU/BSF/CMXA/BSE
	1.6 LPG	08.09-11.12	75	CHGA
	1.6 MultiFuel	01.08-06.13	75	CCSA/CMXA
Octavia Combi (1U5)	1.4 16V	08.00-12.10	55	AXP/BCA
	1.6	07.98-12.07	74	AKL/AEH
	1.6	09.00-12.10	75	AVU/BFQ
	1.8 20V	07.98-07.00	92	AGN
	2.0	04.99-05.07	85	APK/AZH/AQY/AEG
	2.0 4x4	08.00-09.04	85	AZH
	2.0 4x4	01.00-12.10	88	ATF
Octavia Combi (1Z5)	1.2 TSI	02.10-04.13	77	CBZB
	1.6	09.04-06.13	75	BGU/BSF/CMXA/BSE
	1.6 LPG	08.09-11.12	75	CHGA
	1.6 MultiFuel	01.08-06.13	75	CCSA/CMXA
Rapid (NH3)	1.2 TSI	07.12-	63	CBZA
	1.2 TSI	07.12-	77	CBZB
Rapid Spaceback	1.2 TSI	07.12-	63	CBZA
	1.2 TSI	07.12-	77	CBZB
Roomster (5J)	1.2 TSI	03.10-	63	CBZA
	1.2 TSI	03.10-	77	CBZB
Roomster Praktik (5J)	1.2 TSI	03.10-	63	CBZA
Superb (3U4)	2.0	12.01-03.08	85	AZM
Yeti (5L)	1.2 TSI	09.09-	77	CBZB
VW				
Beetle (5C1)	1.2 TSI	07.11-	77	CBZB
Beetle Cabriolet (5C7)	1.2 TSI	12.12-	77	CYVD/CBZB
Bora (1J2)	1.4 16V	03.00-05.05	55	AHW/AXP/APE/AKQ
	1.6	10.98-05.05	74	AKL/APF/AEH
	1.6	08.00-05.05	75	AVU/BFQ
	1.6 16V	05.00-05.05	77	AUS/ATN
	1.8	10.98-05.05	92	AGN
	1.8 4motion	02.99-05.05	92	AGN
	2.0	10.98-05.05	85	APK/AZH/AQY
	2.0 4motion	04.00-05.05	85	AZH

< CL002

VW				
Bora Combi (1J6)	1.4 16V	09.01-05.05	55	AHW/AXP
	1.6	05.99-05.05	74	APF/AEH
	1.6	08.00-05.05	75	AVU/BFQ
	1.6 16V	02.00-05.05	77	AUS/ATN
	1.8 4motion	05.99-05.05	92	AGN
	2.0	05.99-05.05	85	APK/AZH/AQY
	2.0 4motion	04.00-05.05	85	AZH
Caddy II Combi	1.4	11.95-01.04	44	AUD
	1.4 16V	08.00-01.04	55	AUA
Caddy II Van	1.4 60	11.95-01.04	44	AUD
	1.4	08.00-01.04	55	AUA
Caddy III Combi	1.2 TSI	09.10-	63	CBZA
	1.2 TSI	09.10-	77	CBZB
	1.6	04.04-	75	BGU/BSF/BSE
	1.6 BiFuel	05.11-	75	CHGA
Caddy III Van	1.2 TSI	09.10-	63	CBZA
	1.2 TSI	09.10-	77	CBZB
	1.6	04.04-	75	BGU/BSF/BSE
	1.6 BiFuel	05.11-	75	CHGA
Fox (5Z1, 5Z3)	1.4	04.05-	55	BKR
Golf IV (1J1)	1.4 16V	08.97-06.05	55	AHW/AXP/APE/AKQ
	1.6	08.97-05.04	74	AKL/APF/AEH
	1.6	08.00-06.05	75	AVU/BFQ
	1.6 16V	02.00-06.05	77	AUS/ATN
	1.8	08.97-06.05	92	AGN
	1.8 4motion	05.98-06.05	92	AGN
	2.0	07.98-05.04	85	APK/AQY
	2.0 4motion	10.00-06.05	85	AZH
Golf IV Cabriolet	2.0	06.98-06.02	85	ATU
Golf IV Variant (1J5)	1.4 16V	05.99-06.06	55	AHW/AXP/APE/AKQ
	1.6	05.99-04.02	74	AKL/APF/AEH
	1.6	08.00-06.06	75	AVU/BFQ
	1.6 16V	02.00-06.06	77	AUS/ATN
	1.8 4motion	05.99-06.06	92	AGN
	2.0	05.99-06.06	85	APK/AQY
	2.0 4motion	10.00-06.06	85	AZH
Golf V (1K1)	1.6	01.04-11.08	75	BGU/BSF/BSE
Golf V Variant (1K5)	1.6	06.07-07.09	75	BGU/CCSA/BSF/BSE
Golf VI (5K1)	1.2 TSI	05.10-11.12	63	CBZA
	1.2 TSI	05.09-11.12	77	CBZB
	1.6	10.08-11.12	75	BSF/CMXA/BSE
	1.6 BiFuel	03.09-11.12	75	CHGA
	1.6 MultiFuel	10.08-11.12	75	CCSA/CMXA
Golf VI Cabriolet	1.2 TSI	03.11-11.13	77	CBZB
Golf VI Variant (AJ5)	1.2 TSI	07.10-07.13	63	CBZA
	1.2 TSI	08.09-07.13	77	CBZB
	1.6	07.09-07.13	75	BSF/CMXA/BSE
Golf Plus (5M1, 521)	1.2 TSI	11.09-12.13	77	CBZB
	1.6	05.05-12.13	75	BSF/CMXA/BSE
	1.6 BiFuel	05.09-12.13	75	CHGA
	1.6 MultiFuel	11.07-12.13	75	CCSA/CMXA
Jetta III (1K2)	1.6	10.05-10.10	75	BSF/BSE
	1.6 MultiFuel	01.08-10.10	75	CCSA
Jetta IV (162, 163)	1.2 TSI	02.11-	77	CBZB
	2.0	06.10-	85	CKJA/CBPA
Lupo (6X1, 6E1)	1.0	09.98-07.05	37	ALD/ANV/AUC
	1.4	10.00-07.05	44	AUD
	1.4 16V	09.98-07.05	55	AHW/APE/AKQ/AUA
	1.4 16V	08.99-07.05	74	AFK/AUB/AQQ
	1.6 GTI	09.00-07.05	92	AVY
Multivan V	2.0	11.03-	85	AXA
New Beetle	1.6	10.99-09.00	74	AWH
	1.6	06.00-09.10	75	AYD/BFS
	2.0	01.98-09.10	85	AVH
New Beetle Cabrio	1.6	01.03-09.10	75	BFS
Passat (3B2)	1.6	10.96-11.00	74	AHL/ARM/ANA
Passat (3B3)	1.6	11.00-05.05	75	ALZ
	2.0	11.00-05.05	85	AZM
	2.0 4motion	11.00-05.05	85	AZM
Passat (3C2)	1.6	05.05-07.10	75	BSF/BSE
Passat Variant (3B5)	1.6	06.97-11.00	74	AHL/ARM/ANA

CL002 ▶

< CL002

VW				
Passat Variant (3B6)	1.6	11.00-05.05	75	ALZ
	2.0	11.00-05.05	85	AZM
	2.0 4motion	11.00-05.05	85	AZM
Passat Variant (3C5)	1.6	08.05-11.10	75	BSF/BSE
Polo (6N1)	120 1.6 16V GTI	09.98-10.99	88	AJV
Polo (6N2)	1.0	10.99-09.01	37	ALD/AUC
	1.4	10.99-09.01	40	ANX/AKP
	1.4	10.99-09.01	44	AUD
	1.4 16V	10.99-09.01	55	AHW/APE/AUA
	1.4 16V	10.99-09.01	74	AFK/AUB/AQQ
	1.6 16V GTI	10.99-09.01	92	AVY
Polo (9N_)	1.4 16V	10.01-05.08	55	AUA
	1.4 16V	10.01-05.08	74	AUB
	1.6	08.02-05.05	74	BAH
Polo (6R, 6C)	1.2 TSI	05.11-05.14	66	CBZC
	1.2 TSI	11.09-	77	CBZB
Polo Classic (6KV2)	60 1.4	12.95-09.01	44	AKK/AUD
	75 1.4 16V	10.99-09.01	55	APE/AUA
	100 1.6	12.95-09.01	74	AKL/AEH
Polo Sedan (9A4)	1.6	09.02-	74	BPA/CFZA/BAH
Polo Variant (6KV5)	1.4	12.98-09.01	40	AKP
	1.4	05.97-09.01	44	AKK/AUD
	1.4 16V	10.99-09.01	55	APE/AUA
	1.6	05.97-09.01	74	AKL/AEH
Sharan (7M_)	2.0	09.95-03.10	85	ATM
	2.0 LPG	04.06-03.10	85	ATM
Touran (1T1, 1T2)	1.6	07.03-05.10	75	BGU/BSF/BSE
Touran (1T3)	1.2 TSI	05.10-	77	CBZB
Transporter V Bus	2.0	11.03-	85	AXA
Transporter V Flatbed	2.0	11.03-	85	AXA
Transporter V Van	2.0	11.03-	85	AXA

CL003

OEM-No.

VW 036 905 100A
036 905 100B
036 905 100C
036 905 100D
036 905 715
036 905 715A
036 905 715C
036 905 715E

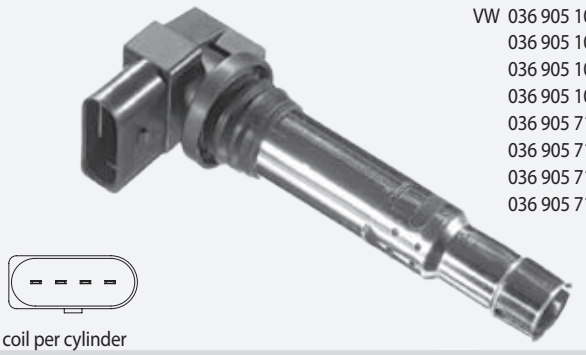

1 coil per cylinder

AUDI				
A1 (8X1, 8XF)	1.4 TFSI	05.10-	90	CNVA/CAXA
	1.4 TFSI	01.11-	136	CTHG/CTJA/CAVG
A1 Sportback (8X_)	1.4 TFSI	11.11-	90	CNVA/CAXA
	1.4 TFSI	11.11-	136	CTHG/CTJA/CAVG
A2 (8Z0)	1.4	02.00-08.05	55	BBY
	1.6 FSI	05.02-08.05	81	BAD
A3 (8P1)	1.4 TFSI	09.07-08.12	92	CMSA/CAXC
	1.6 FSI	08.03-09.07	85	BLF/BLP/BAG
A3 Cabriolet (8P7)	1.4 TFSI	02.11-05.13	92	CAXC
A3 Sportback (8PA)	1.4 TFSI	09.07-03.13	92	CMSA/CAXC
	1.6 FSI	09.04-09.07	85	BLF/BLP
SEAT				
Alhambra (710, 711)	1.4 TSI	06.10-	110	CNWB/CTHA/CAVA
Altea (5P1)	1.4 16V	05.06-	63	CGGB/BXW
	1.4 TSI	11.07-	92	CAXC
Altea XL (5P5, 5P8)	1.4 16V	10.06-	63	CGGB/BXW
	1.4 TSI	11.07-	92	CAXC
Cordoba (6L2)	1.2	10.02-06.06	47	AZQ/BME
	1.2 12V	05.06-11.09	51	BXV
	1.4 16V	09.02-12.07	55	BBY
	1.4 16V	10.02-11.09	74	BBZ
	1.4 16V	05.06-11.09	63	BXW
	1.6 16V	11.06-11.09	77	BTS

< CL003

SEAT				
Ibiza IV (6L1)	1.2	02.02-06.06	47	AZQ
	1.2 12V	05.06-11.09	51	BXV
	1.4 16V	02.02-12.07	55	BBY
	1.4 16V	05.06-11.09	63	BXW
	1.4 16V	02.02-11.09	74	BBZ
	1.6 16V	11.06-11.09	77	BTS
Ibiza V (6J5, 6P5)	1.2	07.09-	44	CGPB
	1.2	03.08-	51	CJLB/BZG/CGPA
	1.4	03.08-	63	CGGB/BXW
	1.4 TSI	06.09-	110	CAVF/CNUB/CTJB
	1.6	05.08-	77	BTS
Ibiza V SportCoupe	1.2	07.09-	44	CGPB
	1.2	07.08-	51	CJLB/BZG/CGPA
	1.4	07.08-	63	CGGB/BXW
	1.4 TSI	06.09-	110	CAVF/CNUB/CTJB
	1.4 TSI Cupra	06.09-	132	CTJC/CAVE/CTHE
	1.6	07.08-	77	BTS
Ibiza V ST (6J8, 6P8)	1.2	05.10-	44	CGPB
	1.2	05.10-	51	CJLB/BZG/CGPA
	1.4	03.10-	63	CGGB
	1.4 TSI	02.12-	110	CAVF/CNUB/CTJB
Leon (1M1)	1.4 16V	11.99-06.06	55	BCA
	1.6 16V	09.00-06.06	77	BCB/AZD
Leon (1P1)	1.4 16V	06.06-	63	CGGB/BXW
	1.4 TSI	11.07-	92	CAXC
Toledo II (1M2)	1.6 16V	06.00-05.06	77	BCB/AZD
Toledo IV (KG3)	1.2	07.12-	55	CGPC
	1.4 TSI	07.12-	90	CAXA
	1.6	07.13-	77	CFNA
SKODA				
Fabia (6Y2)	1.2	01.03-03.08	47	AZQ/BME
	1.4 16V	12.99-03.08	55	BBY/BKY
	1.4 16V	12.99-03.08	74	BBZ
Fabia	1.2	01.07-12.14	51	CEVA/BZG/CHTA
	1.4	01.07-12.14	63	CGGB/BXW
	1.4 TSI RS	05.10-12.14	132	CAVE/CTHE
	1.6	04.07-12.14	77	BTS/CFNA
Fabia Combi (6Y5)	1.2	01.03-12.07	47	AZQ/BME
	1.4 16V	05.00-12.07	55	BBY/BKY
	1.4 16V	04.06-12.07	59	BUD
	1.4 16V	04.00-12.07	74	BBZ
Fabia Combi	1.2	10.07-12.14	51	CEVA/BZG/CHTA
	1.4	10.07-12.14	63	CGGB/BXW
	1.4 TSI RS	05.10-12.14	132	CAVE/CTHE
	1.6	10.07-12.14	77	BTS/CFNA
Fabia Praktik	1.2	01.03-12.07	47	AZQ/BME
Fabia Sedan (6Y3)	1.2	01.03-12.07	47	AZQ/BME
	1.4 16V	10.99-12.07	55	BBY/BKY
	1.4 16V	04.06-12.07	59	BUD
	1.4 16V	12.99-12.07	74	BBZ
Octavia (1Z3)	1.4	05.04-05.06	55	BCA
	1.4	06.04-04.13	59	BUD/CGGA
	1.4 TSI	11.08-06.13	90	CAXA
	1.6 FSI	02.04-10.08	85	BLF
Octavia Combi (1Z5)	1.4	05.06-06.13	59	BUD/CGGA
	1.4 TSI	11.08-06.13	90	CAXA
	1.6 FSI	02.04-10.08	85	BLF
Rapid (NH3)	1.2	07.12-	55	CGPC
	1.4 TSI	07.12-	90	CAXA
	1.6	07.12-	77	CFNA
Rapid Spaceback	1.2	07.12-	55	CGPC
	1.4 TSI	07.12-	90	CAXA
	1.6	07.12-	77	CFNA
Roomster (5J)	1.2	05.06-01.07	47	BME
	1.2	01.07-	51	BZG/CGPA
	1.4	09.06-	63	CGGB/BXW
	1.6	09.06-	77	BTS/CFNA
Roomster Praktik (5J)	1.2	03.07-	51	BZG/CGPA
	1.4	03.07-	63	CGGB/BXW
Superb (3T4)	1.4 TSI	07.08-	92	CAXC
Superb Combi (3T5)	1.4 TSI	10.09-	92	CAXC

< CL003

SKODA				
Yeti (5L)	1.4 TSI	06.10-	90	CAXA
VW				
Beetle (5C1)	1.4 TSI	04.11-	118	CTKA/CAVD/CNWA
Beetle Cabriolet	1.4 TSI	12.12-	118	CTKA/CAVD/CNWA
Bora (1J2)	1.4 16V	03.00-05.05	55	BCA
	1.6 16V	05.00-05.05	77	BCB/AZD
	1.6 FSI	01.02-05.05	81	BAD
Bora Combi (1J6)	1.4 16V	09.01-05.05	55	BCA
	1.6 16V	02.00-05.05	77	BCB/AZD
	1.6 FSI	01.02-05.05	81	BAD
Caddy III Combi	1.4	03.04-05.06	55	BCA
	1.4 16V	05.06-08.10	59	BUD
Caddy III Van	1.4	03.04-05.06	55	BCA
	1.4 16V	05.06-08.10	59	BUD
CC (358)	1.4 TSI	11.11-	118	CTHD
	1.4 TSI MultiFuel	11.11-	118	CKMA
Eos (1F7, 1F8)	1.4 TSI	11.07-	90	CAXA
	1.4 TSI	05.08-	118	CAVD/CTHD
	1.6 FSI	06.06-05.08	85	BLF
Golf IV (1J1)	1.4 16V	08.97-06.05	55	BCA
	1.6 16V	02.00-06.05	77	BCB/AZD
	1.6 FSI	01.02-06.05	81	BAD
Golf IV Variant (1J5)	1.4 16V	05.99-06.06	55	BCA
	1.6 16V	02.00-06.06	77	BCB/AZD
	1.6 FSI	01.02-06.06	81	BAD
Golf V (1K1)	1.4 16V	10.03-05.06	55	BCA
	1.4 16V	05.06-11.08	59	BUD
	1.4 FSI	10.03-07.06	66	BKG/BLN
	1.4 TSI	05.07-11.08	90	CAXA
	1.4 TSI	05.06-11.08	103	BMY
	1.4 TSI	11.05-11.08	125	BLG
	1.6 FSI	10.03-07.08	85	BLF/BLP/BAG
Golf V Variant (1K5)	1.4	06.07-07.09	59	BUD
	1.4 TSI	06.07-07.09	90	CAXA
	1.4 TSI	06.07-07.09	103	BMY
	1.4 TSI	07.08-07.09	118	CAVD
	1.4 TSI	06.07-07.09	125	BLG
Golf VI (5K1)	1.4	10.08-11.12	59	CGGA
	1.4 TSI	10.08-11.12	90	CAXA
	1.4 TSI	10.08-11.12	118	CTKA/CAVD/CNWA
Golf VI Cabriolet	1.4 TSI	11.11-	90	CAXA
	1.4 TSI	03.11-	118	CTKA/CAVD/CNWA
Golf VI Variant (AJ5)	1.4	07.09-07.13	59	BUD/CGGA
	1.4 TSI	07.09-07.13	90	CAXA
	1.4 TSI	07.09-07.13	118	CTKA/CAVD/CNWA
Golf Plus (5M1, 521)	1.4 16V	01.05-11.06	55	BCA
	1.4 16V	05.06-12.13	59	BUD/CGGA
	1.4 FSI	07.05-11.06	66	BLN
	1.4 TSI	06.07-12.13	90	CAXA
	1.4 TSI	05.06-06.08	103	BMY
	1.4 TSI	06.08-12.13	118	CAVD/CNWA
	1.4 TSI	05.06-06.08	125	BLG
	1.6 FSI	01.05-05.08	85	BLF
Jetta III (1K2)	1.4 TSI	05.07-10.10	90	CAXA
	1.4 TSI	07.06-10.10	103	BMY
	1.4 TSI	07.08-10.10	118	CAVD
	1.4 TSI	07.06-10.10	125	BLG
	1.6 FSI	09.05-10.10	85	BLF
Jetta IV (162, 163)	1.4 TSI	05.11-	90	CMSB/CAXA
	1.4 TSI	04.11-07.14	110	CTHA/CAVA
	1.4 TSI	04.11-	118	CAVD/CTHD
	1.6	12.11-	77	CFNA/CLRA
	1.6	03.13-	63	CFNB
Lupo (6X1, 6E1)	1.4 16V	09.98-07.05	55	BBY
	1.4 FSI	02.01-07.05	77	ARR
New Beetle	1.4	11.01-09.10	55	BCA
New Beetle Cabrio	1.4	01.03-09.10	55	BCA
Passat (3C2)	1.4 TSI	05.07-07.10	90	CAXA
	1.4 TSI EcoFuel	01.09-07.10	110	CDGA
	1.6 FSI	03.05-06.08	85	BLF
Passat (362)	1.4 TSI	08.10-12.14	90	CAXA

< CL003

VW				
Passat (362)	1.4 TSI	11.12-12.14	118	CTHD
	1.4 TSI EcoFuel	08.10-12.14	110	CDGA
	1.4 TSI MultiFuel	11.10-12.14	118	CKMA
Passat Variant (3C5)	1.4 TSI	05.07-11.10	90	CAXA
	1.4 TSI EcoFuel	01.09-11.10	110	CDGA
	1.6 FSI	08.05-06.08	85	BLF
Passat Variant (365)	1.4 TSI	08.10-12.14	90	CAXA
	1.4 TSI	11.12-12.14	118	CTHD
	1.4 TSI EcoFuel	08.10-12.14	110	CDGA
	1.4 TSI MultiFuel	11.10-12.14	118	CKMA
Polo (9N_)	1.2 12V	10.01-07.07	47	AZQ/BME
	1.2 12V	05.07-11.09	51	BZG
	1.4	06.05-11.09	63	
	1.4 16V	10.01-05.08	55	BBY/BKY
	1.4 16V	05.06-11.09	59	BUD
	1.4 16V	10.01-05.08	74	BBZ
	1.4 FSI	02.02-07.06	63	AXU
	1.6 16V	05.06-11.09	77	BTS
Polo (6R, 6C)	1.2	06.09-	44	CGPB
	1.2	06.09-	51	CGPA
	1.4	06.09-	63	CGGB/CLPA/CDDA
	1.4 BiFuel	03.10-01.11	60	CMAA
	1.4 GTI	05.10-	132	CAVE/CTHE
	1.6 BiFuel	01.11-	60	CNKA
Polo Sedan (9A4)	1.4	07.03-	55	BBY/BKY
	1.4	11.03-	74	BBZ
Polo Sedan	1.6	11.10-	63	CFNB
	1.6	05.10-	77	CFNA/CLSA
Scirocco (137, 138)	1.4 TSI	08.08-	90	CMSB/CAXA
	1.4 TSI	05.08-	118	CTKA/CAVD/CNWA
Sharan (7N1, 7N2)	1.4 TSI	05.10-	110	CTHA/CNWB/CAVA
Tiguan (5N_)	1.4 TSI	08.10-	90	CAXA
	1.4 TSI	05.08-	110	BWK/CTHA/CAVA
	1.4 TSI	05.11-	118	CAVD/CTHD
	1.4 TSI 4motion	09.07-	110	BWK/CTHA/CAVA
	1.4 TSI 4motion	05.11-	118	CAVD/CTHD
Touran (1T1, 1T2)	1.4 FSI	11.06-05.10	125	BLG/CAVB
	1.4 TSI	02.06-05.10	103	BMY
	1.4 TSI EcoFuel	05.09-05.10	110	CDGA
	1.6 FSI	02.03-01.07	85	BLF/BLP/BAG
Touran (1T3)	1.4 TSI	05.10-	103	CTHC/CAVC
	1.4 TSI	05.10-	125	CTHB/CAVB
	1.4 TSI EcoFuel	05.10-	110	CDGA

CL004

OEM-No.

VW 058 905 101
058 905 105

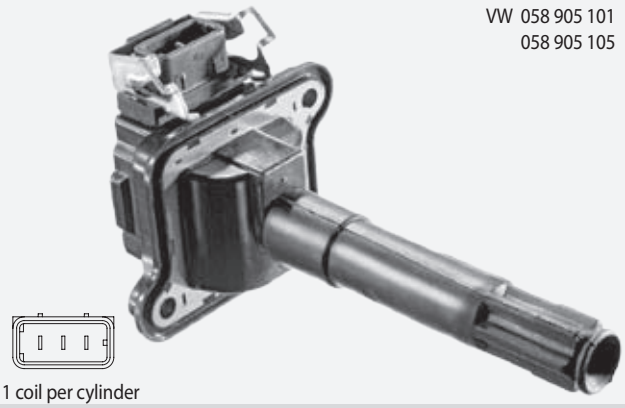

1 coil per cylinder

AUDI				
A3 (8L1)	1.8 T quattro	12.96-05.03	110	AGU
A4 (8D2, B5)	1.8 T	01.95-11.00	110	ARK/AEB/ANB/APU
	1.8 T	12.97-11.00	132	AJL
	1.8 T quattro	01.95-11.00	110	ARK/AEB/ANB/APU
	1.8 T quattro	12.97-11.00	132	AJL
	S4 quattro 2.7	09.97-09.01	195	AGB/AZB
A4 Avant (8D5, B5)	1.8 T	03.96-09.01	110	ARK/AEB/ANB/APU
	1.8 T	12.97-09.01	132	AJL
	1.8 T quattro	01.96-09.01	110	ARK/AEB/ANB/APU

CL004 ▶

< CL004

AUDI				
A4 Avant (8D5, B5)	1.8 T quattro	12.97-09.01	132	AJL
	RS4 quattro 2.7	05.00-09.01	280	AZR/ASJ
	S4 quattro 2.7	09.97-09.01	195	AGB/AZB
A6 (4A, C4)	S6 Plus quattro 4.2	04.96-10.97	240	AHK
A6 (4B2, C5)	1.8 T	01.97-01.05	110	ARK/AEB/ANB/APU
	1.8 T	12.97-01.05	132	AJL
	1.8 T quattro	02.97-01.05	110	ARK/AEB/ANB/APU
	1.8 T quattro	12.97-01.05	132	AJL
	2.7 T	02.99-01.05	169	AJK
	2.7 T quattro	12.97-01.05	169	AJK/AZA
	2.7 T quattro	08.01-01.05	184	ARE
A6 Avant (4A, C4)	S6 Plus quattro 4.2	04.96-12.97	240	AHK
A6 Avant (4B5, C5)	1.8 T	12.97-01.05	110	ARK/AEB/ANB/APU
	1.8 T	04.99-01.05	132	AJL
	1.8 T quattro	12.97-01.05	110	ARK/AEB/ANB/APU
	1.8 T quattro	12.97-01.05	132	AJL
	2.7 T	02.99-01.05	169	AJK
	2.7 T quattro	12.97-01.05	169	AJK/AZA
	2.7 T quattro	08.01-01.05	184	ARE
A8 (4D2, 4D8)	3.7	07.95-12.98	169	AEW
	3.7 quattro	07.95-11.98	169	AKJ/AEW
	4.2 quattro	03.94-07.96	180	AEM
	4.2 quattro	03.94-11.98	220	AKG/ABZ
	S 8 quattro 4.2	07.96-06.99	250	AHC/AKH
Allroad (4BH, C5)	2.7 T quattro	05.00-08.05	184	ARE
SEAT				
Alhambra	1.8 T 20V	10.97-03.10	110	AWC/AJH
SKODA				
Octavia (1U2)	1.8 T	08.97-12.10	110	AGU
	1.8 T 4x4	05.01-05.06	110	AGU
Octavia Combi (1U5)	1.8 T	07.98-12.10	110	AGU
	1.8 T 4x4	05.01-05.06	110	AGU
VW				
Bora (1J2)	1.8 T	05.00-05.05	110	AGU
Bora Combi (1J6)	1.8 T	05.00-05.05	110	AGU
Golf IV (1J1)	1.8 T	08.97-06.05	110	AGU
Golf IV Variant (1J5)	1.8 T	05.00-06.06	110	AGU
Passat (3B2)	1.8 T	10.96-11.00	110	AEB/ANB/APU
Passat Variant (3B5)	1.8 T	06.97-11.00	110	AEB/ANB/APU
Sharan (7M_)	1.8 T 20V	09.97-03.10	110	AJH

CL005

OEM-No.
VW 06A 905 115
06A 905 115A
06A 905 115B
06A 905 115C
06B 905 115
06B 905 115D
06B 905 115G
06B 905 115H

1 coil per cylinder

AUDI				
A3 (8L1)	1.8 T	12.98-05.03	132	AJQ/APP
	1.8 T quattro	12.96-07.98	110	ARX
	S3 quattro 1.8	03.99-04.02	154	AMK/APY
	S3 quattro 1.8	10.01-05.03	165	BAM
A4 (8D2, B5)	1.8 T	01.95-11.00	110	AWT
	1.8 T quattro	01.95-11.00	110	AWT
A4 (8E2, B6)	1.8 T	11.00-07.02	110	AVJ
	1.8 T	07.02-12.04	120	BFB
	1.8 T	11.02-12.04	140	BEX
	1.8 T quattro	11.00-07.02	110	AVJ
	1.8 T quattro	07.02-12.04	120	BFB

< CL005

AUDI				
A4 (8E2, B6)	1.8 T quattro	11.02-12.04	140	BEX
A4 (8EC, B7)	1.8 T	11.04-06.08	120	BFB
	1.8 T quattro	11.04-06.08	120	BFB
	2.0	11.04-06.08	96	ALT
A4 Avant (8D5, B5)	1.8 T	03.96-09.01	110	AWT
	1.8 T quattro	01.96-09.01	110	AWT
A4 Avant (8E5, B6)	1.8 T	09.01-07.02	110	AVJ
	1.8 T	07.02-12.04	120	BFB
	1.8 T	11.02-12.04	140	BEX
	1.8 T quattro	09.01-07.02	110	AVJ
	1.8 T quattro	07.02-12.04	120	BFB
	1.8 T quattro	11.02-12.04	140	BEX
A4 Avant (8ED, B7)	1.8 T	11.04-06.08	120	BFB
	1.8 T quattro	11.04-06.08	120	BFB
	2.0	11.04-06.08	96	ALT
A4 Cabriolet	1.8 T	07.02-03.09	120	BFB
	1.8 T quattro	05.03-03.09	120	BFB
A6 (4B2, C5)	1.8 T	01.97-01.05	110	AWT
	1.8 T quattro	02.97-01.05	110	AWT
	2.7 T quattro	08.01-01.05	184	BES
A6 Avant (4B5, C5)	1.8 T	12.97-01.05	110	AWT
	1.8 T quattro	12.97-01.05	110	AWT
	2.7 T quattro	08.01-01.05	184	BES
TT (8N3)	1.8 T	09.02-06.06	110	AUM
	1.8 T	09.05-06.06	120	BVP
	1.8 T	09.00-06.06	132	APP/AUQ
	1.8 T	09.05-06.06	140	BVR
	1.8 T quattro	10.98-06.06	132	ARY
	1.8 T quattro	09.05-06.06	140	BVR
	1.8 T quattro	10.98-06.06	165	BAM
	1.8 T quattro	03.05-06.06	176	BFV
TT Roadster (8N9)	1.8 T	01.01-06.06	110	AUM
	1.8 T	09.05-06.06	120	BVP
	1.8 T	09.00-06.06	132	APP/AUQ
	1.8 T	09.05-06.06	140	BVR
	1.8 T quattro	02.00-06.06	132	ARY
	1.8 T quattro	09.05-06.06	140	BVR
	1.8 T quattro	10.99-06.06	165	BAM/APX
SEAT				
Cordoba (6K2)	1.8 T 20V Cupra	07.00-10.02	115	AYP/AQX
Ibiza III (6K1)	1.8 T 20V Cupra	07.00-02.02	115	AYP/AQX
Ibiza IV (6L1)	1.8 T Cupra R	01.04-02.08	132	BBU/BLZ
	1.8 T FR	12.03-05.08	110	BKV/BJX
Leon (1M1)	1.8 20V T	11.99-06.06	132	APP/AUQ
	1.8 20V T 4	11.99-06.06	132	ARY
	1.8 T Cupra R	02.02-06.06	154	AMK
	1.8 T Cupra R	07.03-06.06	165	BAM
Toledo II (1M2)	1.8 20VT	09.00-07.04	132	APP/AUQ
SKODA				
Octavia (1U2)	1.8 T	08.97-12.10	110	ARX/ARZ/AUM
	1.8 T 4x4	05.01-05.06	110	ARX/AUM
	1.8 T RS	05.01-01.06	132	AUQ
Octavia Combi (1U5)	1.8 T	07.98-12.10	110	ARX/ARZ/AUM
	1.8 T 4x4	05.01-05.06	110	ARX/AUM
	1.8 T RS	08.02-01.06	132	AUQ
Superb (3U4)	1.8 T	12.01-03.08	110	AWT
VW				
Bora (1J2)	1.8 T	05.00-05.05	110	ARX/AUM
	1.8 T	03.02-05.05	132	AUQ
Bora Combi (1J6)	1.8 T	05.00-05.05	110	ARX/AUM
	1.8 T	05.02-05.05	132	AUQ
Golf IV (1J1)	1.8 T	08.97-06.05	110	AUM
	1.8 T GTI	08.01-06.05	132	AUQ
Golf IV Variant (1J5)	1.8 T	05.00-06.06	110	AUM
New Beetle	1.8 T	10.99-09.10	110	AWV/APH/AVC/AWU
New Beetle Cabrio	1.8 T	01.03-09.10	110	AWU
Passat (3B3)	1.8 T 20V	11.00-05.05	110	AWT/AWL
	2.0	11.01-05.05	96	ALT
Passat Variant (3B6)	1.8 T 20V	11.00-05.05	110	AWT
	2.0	11.01-05.05	96	ALT
Polo (9N_)	1.8 GTI	09.05-11.09	110	BJX

< CL005

VW				
Polo (9N_)	1.8 GTi Cup Edition	05.06-11.09	132	BBU

CL006

PIN

OEM-No.
VW 078 905 101
078 905 101A
078 905 104

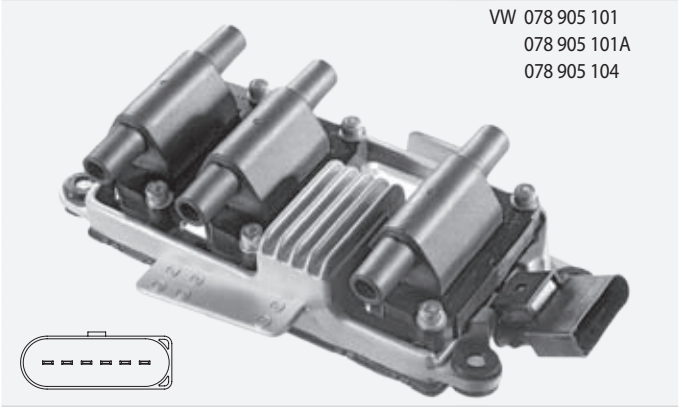

AUDI				
80 (8C, B4)	2.6	07.92-12.94	110	ABC
	2.6 quattro	06.92-12.94	110	ABC
	2.8	09.91-12.94	128	AAH
	2.8 quattro	09.91-12.94	128	AAH
80 Avant (8C, B4)	2.6	07.92-01.96	110	ABC
	2.6 quattro	07.92-07.95	110	ABC
	2.8	09.91-01.96	128	AAH
	2.8 quattro	08.92-07.95	128	AAH
100 (4A, C4)	2.6	07.93-06.94	102	ACZ
	2.6	03.92-06.94	110	ABC
	2.6 quattro	04.92-06.94	110	ABC
	2.6 E quattro	08.93-07.94	102	ACZ
	2.8 E	12.90-06.94	128	AAH
	2.8 E quattro	12.90-06.94	128	AAH
100 Avant (4A, C4)	2.6	07.93-06.94	102	ACZ
	2.6	03.92-06.94	110	ABC
	2.6 quattro	07.92-06.94	110	ABC
	2.6 E quattro	08.93-07.94	102	ACZ
	2.8 E	09.91-06.94	128	AAH
	2.8 E quattro	09.91-06.94	128	AAH
A4 (8D2, B5)	2.4	03.97-11.00	121	AML/ARJ/AGA/APS
	2.4	08.97-11.00	120	AMM/APZ/AJG
	2.4 quattro	03.97-11.00	121	AML/ARJ/AGA/APS
	2.4 quattro	08.97-11.00	120	APZ
	2.6	01.95-07.98	110	ABC
	2.6 quattro	01.95-07.98	110	ABC
	2.8	10.96-11.00	142	APR/ALG/AHA/AQD
	2.8 quattro	10.96-08.01	142	APR/ALG/AHA/AQD
A4 (8E2, B6)	2.4	09.01-12.04	125	BDV
	2.4	09.01-12.04	120	AMM
A4 Avant (8D5, B5)	2.4	03.97-09.01	121	AML/ARJ/AGA/APS
	2.4	08.97-09.01	120	AMM/APZ/AJG
	2.4 quattro	03.97-09.01	121	AML/ARJ/AGA/APS
	2.4 quattro	08.97-09.01	120	APZ
	2.6	02.96-07.98	110	ABC
	2.6 quattro	01.96-07.98	110	ABC
	2.8	10.96-09.01	142	APR/ALG/AHA/AQD
	2.8 quattro	10.96-09.01	142	APR/ALG/AHA/AQD
A4 Avant (8E5, B6)	2.4	09.01-12.04	120	AMM
	2.4	09.01-12.04	125	BDV
A4 Cabriolet (8H_, B_)	2.4	04.02-12.05	120	AMM
	2.4	04.02-12.05	125	BDV
A6 (4A, C4)	2.6	06.94-10.97	110	ABC
	2.6 quattro	06.94-10.97	110	ABC
	2.8	12.95-10.97	142	ACK
	2.8 quattro	12.95-10.97	142	ACK
A6 (4B2, C5)	2.4	07.98-01.05	100	ARN/ASM/ALW
	2.4	02.97-01.05	115	APC
	2.4	02.97-01.05	120	AMM/APZ/AJG
	2.4	02.97-01.05	121	AML/ARJ/AGA/APS
	2.4	08.01-01.05	125	BDV

< CL006

AUDI				
A6 (4B2, C5)	2.4 quattro	08.98-07.99	115	APC
	2.4 quattro	02.97-01.05	120	APZ/AJG
	2.4 quattro	02.97-01.05	121	AML/ARJ/AGA/APS
	2.4 quattro	08.01-01.05	125	BDV
	2.7 T quattro	08.01-01.05	184	BES/ARE
	2.8	10.97-05.00	132	AGE
	2.8	07.99-01.05	140	ATX
	2.8	02.97-01.05	142	APR/ALG/AHA/AQD
	2.8 quattro	01.98-04.00	132	AGE
	2.8 quattro	02.97-01.05	142	APR/ALG/AHA/AQD
A6 Avant (4A, C4)	2.6	06.94-12.97	110	ABC
	2.6 quattro	06.94-12.97	110	ABC
	2.8	12.95-12.97	142	ACK
	2.8 quattro	12.95-12.97	142	ACK
A6 Avant (4B5, C5)	2.4	12.97-01.05	121	AML/ARJ/AGA/APS
	2.4	07.98-01.05	100	ARN/ASM/ALW
	2.4	12.97-01.05	115	APC
	2.4	08.01-01.05	125	BDV
	2.4	12.97-01.05	120	AMM/APZ/AJG
	2.4 quattro	12.97-01.05	121	AML/ARJ/AGA/APS
	2.4 quattro	08.01-01.05	125	BDV
	2.4 quattro	12.97-01.05	120	APZ/AJG
	2.4 quattro	08.98-05.01	115	APC
	2.8	12.97-05.00	132	AGE
	2.8	07.99-01.05	140	ATX
	2.8	12.97-01.05	142	APR/ALG/AHA/AQD
	2.8 quattro	12.97-01.05	142	APR/ALG/AHA/AQD
A8 (4D2, 4D8)	2.8	04.96-09.02	142	APR/ACK/AQD/AMX
	2.8 quattro	04.96-09.02	142	APR/ACK/AQD/AMX
Cabriolet (8G7, B4)	2.6	06.93-08.00	110	ABC
	2.8	11.92-08.00	128	AAH
Coupe (89, 8B)	2.6	08.92-12.96	110	ABC
	2.6 quattro	08.92-12.96	110	ABC
	2.8	09.91-12.96	128	AAH
	2.8 quattro	08.91-12.96	128	AAH
SKODA				
Superb (3U4)	2.8 V6	12.01-03.08	142	AMX
VW				
Passat (3B2)	2.8 Syncro	05.97-09.99	132	AGE
	2.8 V6	05.97-09.99	132	AGE
	2.8 V6	09.99-11.00	140	BBG
	2.8 V6	08.96-11.00	142	APR/ACK/AHA/AQD
	2.8 V6 Syncro	10.96-11.00	142	APR/ACK/AHA/AQD
Passat (3B3)	2.8	05.02-05.03	142	ATQ/AMX
	2.8 4motion	11.00-05.05	142	ATQ/AMX
Passat Variant (3B5)	2.8 Syncro	05.97-09.99	132	AGE
	2.8 V6	09.97-09.99	132	AGE
	2.8 V6	06.97-11.00	142	APR/ACK/AHA/AQD
	2.8 V6 Syncro	06.97-11.00	142	APR/ACK/AHA/AQD
Passat Variant (3B6)	2.8 4motion	11.00-05.05	142	ATQ/AMX

CL007

OEM-No.
SKODA 047 905 104 A
SKODA 047 905 104 B

SEAT				
Arosa (6H)	1.0	10.98-01.01	37	AHT
SKODA				
Fabia (6Y2)	1.0	12.99-08.02	37	AQV/ARV
	1.4	08.00-08.02	44	AZF/AZE

CL007 ▶

< CL007

SKODA				
Fabia (6Y2)	1.4	08.99-05.03	50	AME/ATZ/AQW
Fabia Combi (6Y5)	1.4	04.00-03.03	44	AZF/AZE
	1.4	04.00-05.03	50	AME/ATZ/AQW
Fabia Praktik	1.4	07.01-05.03	50	AME/ATZ/AQW
Fabia Sedan (6Y3)	1.4	04.00-08.02	44	AZF/AZE
	1.4	07.01-05.03	50	AME/ATZ/AQW
Octavia (1U2)	1.4	04.99-03.01	44	AMD
VW				
Lupo (6X1, 6E1)	1.0	10.98-05.00	37	AHT

CL008

OEM-No.
SKODA 047 905 104

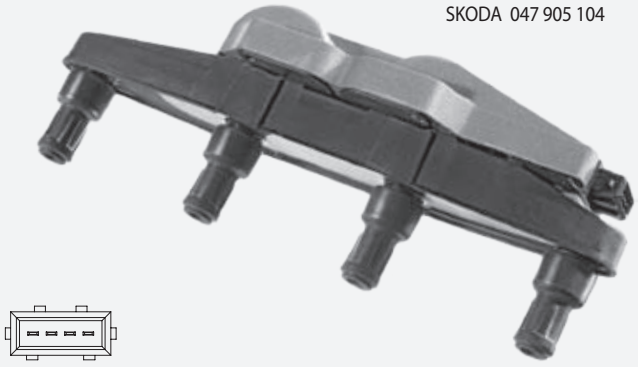

SKODA				
Felicia II (6U1)	1.3	01.98-06.01	40	AMG
	1.3	01.98-06.01	43	AMJ
	1.3	01.98-06.01	50	AMH
Felicia II Combi	1.3	01.98-06.01	50	AMH

CL009

OEM-No.
VW 03D 905 115A
03D 905 115B
03D 905 115C
03D 905 115D
03D 905 115E
03D 905 115F
03D 905 115G

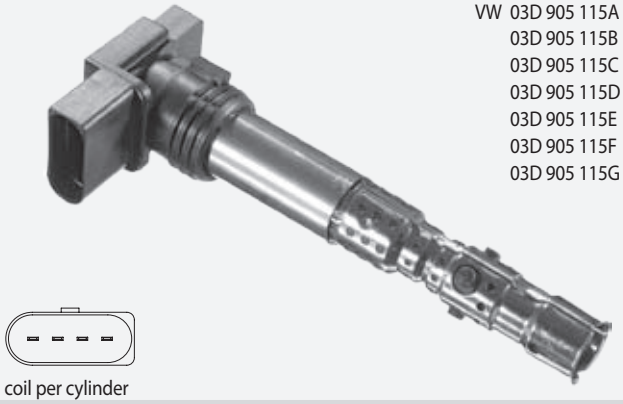

1 coil per cylinder

SEAT				
Ibiza IV (6L1)	1.2	06.07-05.08	44	BBM
SKODA				
Fabia (6Y2)	1.2	08.02-03.08	40	AWY/BMD
Fabia	1.2	12.06-12.14	44	BBM/CHFA
	1.2 12V	11.11-12.14	44	CGPB
Fabia Combi (6Y5)	1.2	07.01-12.07	40	AWY/BMD
Fabia Combi	1.2	10.07-11.14	44	BBM/CHFA
	1.2 12V	11.11-12.14	44	CGPB
Fabia Praktik	1.2	07.01-12.07	40	AWY/BMD
Fabia Sedan (6Y3)	1.2	07.01-12.07	40	AWY/BMD
VW				
Fox (5Z1, 5Z3)	1.2	04.05-	40	BMD/CHFB
	1.2	09.10-	44	CHFA
Polo (9N_)	1.2	01.02-05.07	40	AWY/BMD
	1.2	05.07-11.09	44	BBM

CL010

PIN OEM-No.
VW 06A 905 097
06A 905 104

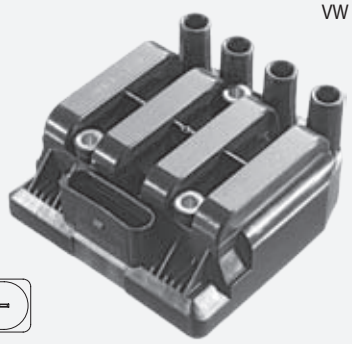

SKODA				
Octavia Combi (1U5)	2.0	04.99-05.07	85	AZJ
	2.0 4x4	08.00-09.04	85	AZJ
VW				
Bora (1J2)	2.0	10.98-05.05	85	AZJ/AZG
	2.0 4motion	04.00-05.05	85	AZJ
Bora Combi (1J6)	2.0	05.99-05.05	85	AZJ/AZG
	2.0 4motion	04.00-05.05	85	AZJ
Caddy III Combi	2.0 EcoFuel	04.06-	80	BSX
Caddy III Van	2.0 EcoFuel	04.06-	80	BSX
Golf IV (1J1)	2.0	07.98-05.04	85	AZJ/AZG
	2.0 4motion	10.00-06.05	85	AZJ
Golf IV Variant (1J5)	2.0	05.99-06.06	85	AZJ
	2.0 4motion	10.00-06.06	85	AZJ
	2.0 BiFuel	02.02-06.06	85	BEH
New Beetle	2.0	01.98-09.10	85	AZG
New Beetle Cabrio	2.0	09.02-10.10	85	AZJ
Touran (1T1, 1T2)	2.0 EcoFuel	02.06-05.09	80	BSX

CL011

OEM-No.
VAG 06F 905 115
06F 905 115 A
06F 905 115 B
06F 905 115 C
06F 905 115 E
06F 905 115 F
07K 905 715

1 coil per cylinder

AUDI				
A1 (8X1, 8XF)	2.0 TFSI quattro	03.12-	188	CDLH
A3 (8P1)	1.8 TFSI	11.06-08.12	118	BZB/CDAA/BYT
	1.8 TFSI quattro	07.08-08.12	118	CDAA
	2.0 FSI	05.03-06.08	110	BLX/BLY/AXW/BVY
	2.0 TFSI	09.04-08.12	147	BWA/AXX/CAWB
	2.0 TFSI quattro	09.04-08.12	147	BWA/AXX
	S3 quattro	11.06-08.12	195	BHZ/CDLA
A3 Cabriolet (8P7)	1.8 TFSI	04.08-05.13	118	BZB/CDAA
	2.0 TFSI	04.08-05.13	147	CCZA/CAWB
A3 Sportback (8PA)	1.8 TFSI	11.06-03.13	118	BZB/CDAA/BYT
	1.8 TFSI quattro	07.08-03.13	118	CDAA
	2.0 FSI	09.04-06.08	110	BLX/BLY/AXW/BVY
	2.0 TFSI	09.04-03.13	147	BWA/AXX/CAWB
	2.0 TFSI quattro	09.04-03.13	147	BWA/AXX
	RS3 quattro	01.11-12.12	250	CEPA
	S3 quattro 2.0	06.08-03.13	195	BHZ/CDLA
	S3 quattro 2.0	07.08-03.13	188	CDLC
A3 Sportback (8VA)	RS3 quattro	03.15-	270	
A4 (8EC, B7)	2.0 TFSI	11.04-06.08	147	BGB/BWE
	2.0 TFSI	06.05-06.08	162	BUL
	2.0 TFSI	10.06-06.08	125	BPJ/BYK

< CL011

AUDI				
A4 (8EC, B7)	2.0 TFSI quattro	11.04-06.08	147	BGB/BWE
	2.0 TFSI quattro	06.05-06.08	162	BUL
	RS4 quattro 4.2	09.05-06.08	309	BNS
A4 (8K2, B8)	1.8 TFSI	01.08-	88	CABA/CDHA
	1.8 TFSI	11.07-	118	CDHB/CABB
	1.8 TFSI quattro	09.08-	118	CDHB
	2.0 TFSI	06.08-	132	CDNB/CFKA/CAEA
	2.0 TFSI	06.08-	155	CAEB/CDNC
	2.0 TFSI flex. fuel	11.09-	132	CFKA
	2.0 TFSI flex. quattro	11.09-	132	CFKA
	2.0 TFSI quattro	06.08-	155	CAEB/CPMA/CDNC
A4 Allroad (8KH, B8)	2.0 TFSI quattro	04.09-	155	CPMA/CDNC
	2.0 TFSI quattro	05.13-	162	CPMB
A4 Avant (8ED, B7)	2.0 TFSI	10.06-06.08	125	BPJ/BYK
	2.0 TFSI	11.04-06.08	147	BGB/BWE
	2.0 TFSI	06.05-06.08	162	BUL
	2.0 TFSI quattro	11.04-06.08	147	BWT/BGB/BWE
	2.0 TFSI quattro	06.05-06.08	162	BUL
	RS4 quattro 4.2.	09.05-06.08	309	BNS
A4 Avant (8K5, B8)	1.8 TFSI	04.08-	88	CDHA
	1.8 TFSI	11.07-	118	CDHB/CABB
	1.8 TFSI quattro	09.08-	118	CDHB
	2.0 TFSI	06.08-	132	CDNB/CFKA/CAEA
	2.0 TFSI	06.08-	155	CAEB/CDNC
	2.0 TFSI flexible fuel	11.09-	132	CFKA
	2.0 TFSI flex quattro	11.09-	132	CFKA
	2.0 TFSI quattro	06.08-	155	CAEB/CDNC
A4 Cabriolet (8H_, B_)	2.0 TFSI 16V	01.06-03.09	147	BWE
	RS4 quattro 4.2	06.06-03.09	309	BNS
A5 (8T3)	1.8 TFSI	05.09-	118	CDHB
	1.8 TFSI	10.07-	125	CABD/CJEB
	2.0 TFSI	11.08-	132	CDNB
	2.0 TFSI	06.08-	155	CDNC
	2.0 TFSI quattro	06.08-	155	CAEB/CDNC
	2.0 TFSI quattro	03.12-	162	CPMB/CAED
	RS 5 quattro 4.2	03.10-	331	CFSA
A5 Cabriolet (8F7)	1.8 TFSI	09.09-	118	CDHB
	2.0 TFSI	03.09-	132	CDNB/CAEA
	2.0 TFSI	03.09-	155	CAEB/CDNC
	2.0 TFSI	05.13-	162	CAED
	2.0 TFSI quattro	03.09-	155	CAEB/CDNC
	2.0 TFSI quattro	03.12-	162	CPMB
A5 Sportback (8TA)	1.8 TFSI	11.09-	118	CDHB
	2.0 TFSI	09.09-	132	CDNB
	2.0 TFSI	09.09-	155	CDNC
	2.0 TFSI quattro	09.09-	155	CDNC
A6 (4F2, C6)	2.0 TFSI	06.05-03.11	125	BPJ
A6 (4G2, C7, 4GC)	2.0 TFSI	05.11-	132	CDNB
	2.0 TFSI	03.11-05.13	155	CAEB
A6 Avant (4F5, C6)	2.0 TFSI	06.05-08.11	125	BPJ
	2.0 TFSI	06.11-	132	CDNB
Q3 (8U)	2.0 TFSI quattro	06.11-	125	CCZC
	2.0 TFSI quattro	06.11-	155	CPSA
	RS 2.5 quattro	05.13-	250	CZGA
Q5 (8R)	2.0 TFSI quattro	08.09-	132	CDNB/CNCB
	2.0 TFSI quattro	11.08-	155	CAEB/CPMA/CDNC
	3.2 FSI quattro	11.08-	199	CALB
R8	5.2 FSI quattro	11.10-07.15	412	CMPA
R8 Spyder	5.2 FSI quattro	11.11-07.15	412	CMPA
TT (8J3)	1.8 TFSI	06.08-06.14	118	CDAA
	2.0 TFSI	08.06-06.10	147	BWA/BPY/CCTA
	2.0 TFSI	05.10-06.14	155	CESA
	2.0 TFSI quattro	06.08-06.10	147	BWA/CCZA
	2.0 TFSI quattro	05.10-06.14	155	CETA/CESA
	2.0 TTS quattro	05.08-06.14	195	CDMA/CDLA
	2.0 TTS quattro	05.08-06.14	200	CDLB
	2.5 RS quattro	07.09-06.14	250	CEPA
	2.5 RS quattro	05.11-06.14	265	CEPB
TT Roadster (8J9)	1.8 TFSI	06.08-06.14	118	CDAA
	2.0 TFSI	03.07-06.10	147	BWA/BPY/CCTA
	2.0 TFSI	05.10-06.14	155	CESA

< CL011

AUDI				
TT Roadster (8J9)	2.0 TFSI quattro	06.08-06.10	147	CCZA
	2.0 TFSI quattro	05.10-06.14	155	CETA/CESA
	2.0 TTS quattro	05.08-06.14	195	CDMA/CDLA
	2.0 TTS quattro	05.08-06.14	200	CDLB
	2.5 RS quattro	07.09-06.14	250	CEPA
SEAT				
Alhambra (710, 711)	1.8 TFSI	11.12-	118	CDAA
	2.0 TSI	11.10-	147	CCZA
Altea (5P1)	1.8 TFSI	01.07-	118	BZB/CDAA/BYT
	2.0 FSI	05.04-03.09	110	BLR/BLY/BVZ/BVY
	2.0 TFSI	04.06-05.09	147	BWA
Altea XL (5P5, 5P8)	1.8 TFSI	01.07-	118	BZB/CDAA/BYT
	2.0 FSI	10.06-03.09	110	BVZ/BVY
	2.0 TFSI 4x4	06.07-05.09	147	BWA
	2.0 TFSI 4x4	05.09-	155	CCZB
Exeo (3R2)	1.8 TSI	05.10-	118	CDHB
	2.0 TFSI	03.09-	147	BWE
	2.0 TFSI	05.10-	155	CDND
Exeo ST (3R5)	1.8 TSI	09.10-	88	CDHA
	1.8 TSI	05.10-	118	CDHB
	2.0 TFSI	06.09-	147	BWE
	2.0 TFSI	05.10-	155	CDND
Leon (1P1)	1.8 TSI	06.07-	118	BZB/CDAA
	2.0 Cupra R	09.09-	195	CDLA
	2.0 FSI	07.05-05.10	110	BLR/BLY/BVZ/BVY
	2.0 TFSI	09.05-05.06	136	BWA1
	2.0 TFSI	05.05-03.09	147	BWA
	2.0 TFSI	06.09-	155	CCZB
	2.0 TFSI	11.06-	177	BWJ/CDLD
Toledo III (5P2)	1.8 TFSI	01.07-05.09	118	BZB/CDAA/BYT
	2.0 FSI	10.04-05.09	110	BLR/BLY/BVZ/BVY
	2.0 TFSI	11.05-05.09	147	BWA
SKODA				
Octavia (1Z3)	1.8 TSI	06.07-04.13	118	BZB/CDAA
	2.0 FSI	11.04-10.08	110	BLY/BLR/BVZ/BVY
	2.0 RS	10.05-02.13	147	BWA/CCZA
Octavia Combi (1Z5)	1.8 TSI	06.07-04.13	118	BZB/CDAA
	1.8 TSI 4x4	11.08-02.13	118	CDAA
	2.0 FSI	11.04-10.08	110	BLY/BLR/BVZ/BVY
	2.0 FSI 4x4	11.04-10.08	110	BVX/BLX
	2.0 RS	10.05-02.13	147	BWA/CCZA
Superb (3T4)	1.8 TSI	03.08-	118	BZB/CDAA
	1.8 TSI 4x4	11.08-	118	CDAA
	2.0 TSI	05.10-	147	CCZA
Superb Combi (3T5)	1.8 TSI	10.09-	118	CDAA
	1.8 TSI 4x4	10.09-	118	CDAA
	2.0 TSI	05.10-	147	CCZA
Yeti (5L)	1.8 TSI 4x4	11.09-	112	CDAB
	1.8 TSI 4x4	05.09-	118	CDAA
VW				
Amarok (2H_, S1B)	2.0 TSI	12.10-	118	CFPA
Beetle (5C1)	2.0 TSI	04.11-	147	CBFA/CCZA/CCTA
	2.5	04.11-	125	CCCA/CBUA/CBTA
Beetle Cabriolet	2.0 TSI	12.12-	147	CBFA/CCZA/CCTA
CC (358)	1.8 TSI	11.11-	118	CDAA
	2.0 TSI	11.11-	155	CCZB
Eos (1F7, 1F8)	2.0 FSI	03.06-05.08	110	BVZ/BVY
	2.0 TFSI	03.06-	147	BWA
	2.0 TSI	11.09-	155	CCZB
Golf V (1K1)	2.0 FSI	01.04-11.08	110	BVX/BLX//AXW/BVY
	2.0 FSI 4motion	08.04-11.08	110	BVX/BLX
	2.0 GTI	10.04-02.09	147	BWA/AXX
	2.0 GTI	09.06-12.08	169	BYD
Golf V Variant (1K5)	2.0	06.07-07.09	147	BWA/CAWB/CCTA
Golf VI (5K1)	1.8 TSI	06.09-01.11	118	CDAA
	2.0 GTi	04.09-11.12	155	CCZB
	2.0 R 4motion	11.09-11.13	188	CRZA/CDLC
	2.0 R 4motion	11.09-11.12	199	CDLF
Golf VI Cabriolet	2.0 GTI	11.11-	155	CCZB
Golf Plus (5M1, 521)	2.0 FSI	05.05-06.08	110	BLY/BLR/BVZ/BVY
Jetta III (1K2)	2.0 FSI	08.05-10.10	110	BLX/_Y/_R/BVZ/BVY

CL011 ▶

< CL011

VW

Jetta III (1K2)	2.0 TFSI	03.08-10.10	125	CAWA
	2.0 TFSI	10.05-10.10	147	BWA/BPY/AXX/CBFA
	2.5 FSI	01.06-10.10	110	BTK/BGP
	2.5 FSI	07.08-10.10	125	CCCA/CBUA/CBTA
Jetta IV (162, 163)	2.0 TSI	12.10-	147	CBFA/CCZA/CCTA
	2.5 FSI	04.10-	125	CCCA/CBUA/CBTA
Multivan T6	2.0 TSI	04.15--	110	CJKB
	2.0 TSI	04.15--	150	CJKB
	2.0 TSI 4motion	06.15--	150	CJKA
New Beetle	2.5	07.05-09.10	110	BPS/BPR
New Beetle Cabrio	2.5	07.05-09.10	110	BPS/BPR
Passat (3C2)	1.8 TSI	05.07-07.10	118	BZB/CDAA
	2.0 FSI	03.05-07.10	110	BLY/BLR/BVZ/BVY
	2.0 FSI	07.05-07.10	147	BWA/BPY/AXX/CBFA
	2.0 FSI 4motion	09.05-07.10	110	BVX/BLX/BLY
Passat (362)	1.8 TSI	08.10-12.14	118	CDAA
	2.0 TSI	11.10-12.14	155	CCZB
Passat Alltrack (365)	1.8 TSI	01.12-	112	CDAB
	1.8 TSI	01.12-	118	CDAA
	2.0 TSI 4motion	01.12-	155	CCZB
Passat CC (357)	1.8 TSI	06.08-11.10	118	BZB/CDAA
	2.0 TSI	06.08-01.12	147	CBFA/CCZA/CAWB
Passat Variant (3C5)	1.8 TSI	05.07-10.11	118	BZB/CDAA
	2.0 FSI	08.05-11.10	110	BLY/BLR/BVZ/BVY
	2.0 FSI	08.05-11.10	147	BWA/BPY/AXX/CBFA
	2.0 FSI 4motion	09.05-11.10	110	BVX/BLX/BLY
Passat Variant (365)	1.8 TSI	08.10-12.14	118	CDAA
	2.0 TSI	11.10-12.14	155	CCZB
Polo (6R, 6C)	2.0 R WRC	08.13-	162	CDLJ
Scirocco (137, 138)	2.0 R	11.09-	188	CDLC
	2.0 R	11.09-	195	CDLA
	2.0 R	05.14-	206	CDLK
	2.0 TSI	05.08-11.09	147	CAWB
	2.0 TSI	11.09-	155	CCZB
Sharan (7N1, 7N2)	2.0 TSI	12.10-	147	CCZA
Tiguan (5N_)	2.0 TFSI 4motion	09.07-	125	CAWA/CCZC
	2.0 TFSI 4motion	09.07-	147	CCZA/CAWB/CCTA
	2.0 TSI 4motion	05.11-	132	CCZD
	2.0 TSI 4motion	05.11-	155	CCZB
Touran (1T1, 1T2)	2.0 FSI	10.03-11.05	110	BLX/AXW/BVZ/BVY
Transporter T6 Bus	2.0 TSI	04.15-	110	CJKB
	2.0 TSI	04.15-	150	CJKA
	2.0 TSI 4motion	06.15-	150	CJKA
Transporter T6 Van	2.0 TSI	04.15-	110	CJKB
	2.0 TSI	04.15-	150	CJKA
	2.0 TSI 4motion	06.15-	150	CJKA
Transporter T6 Flatbed	2.0 TSI	04.15-	110	CJKB

CL012

DIN

OEM-No.
SKODA 115 914 010

SKODA

130 L,GL	1.3	02.85-10.91	45	742.13
130 GL	1.3	08.87-10.91	39	
130 GL (S135)	1.3	05.88-10.91	43	135/8
130 G,GL (S136)	1.3	05.88-10.91	46	
Favorit (781)	1.3 carb	07.91-	43	781.135
	1.3 carb	09.88-07.91	46	781.136

< CL012

SKODA

Favorit (781)	1.3 carb	03.93-09.94	50	781.136X
Favorit Forman (785)	1.3 carb	07.91-	43	781.135
	1.3 carb	09.88-07.91	46	781.136
	1.3 carb	03.93-09.94	50	781.136X
Favorit Pick-up (787)	1.3 carb	07.91-	43	781.135
	1.3 carb	09.88-07.91	46	781.136
	1.3 carb	03.93-09.94	50	781.136X
Rapid (120G, 130G)	1.3 (130G)	08.87-10.91	39	
	1.3 (130G)	03.85-08.88	45	742,13
	1.3 S (135GL)	09.84-12.90	43	135/8

CL013

PIN

OEM-No.
SKODA 047 905 115

SKODA

Felicia I (6U1)	1.3	10.94-03.98	43	AMJ/135 L
Felicia I Combi (6U5)	1.3	08.95-03.98	43	AMJ/135 L

CL014

OEM-No.
VW 06B905105
06B905115
06B905115B
06B905115E

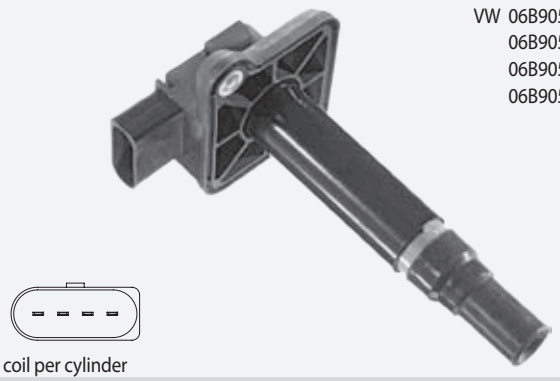

1 coil per cylinder

AUDI

A3 (8L1)	1.8 T	12.96-05.03	110	ARZ/AQA/AGU/AUM
	1.8 T	12.98-05.03	132	ARY/AUQ
	1.8 T quattro	08.98-04.01	110	AQA
	1.8 T quattro	10.98-05.03	132	AJQ/ARY
A6 (4B2, C5)	1.8	07.97-01.05	92	ANQ/ARH/AJP/AQE
	3.7	03.99-01.05	191	AQG
	3.7 quattro	03.99-01.05	191	AQG
	4.2 quattro	11.98-01.05	220	AWN/ARS/ASG
	RS6 quattro 4.2	07.02-01.05	331	BCY
	S6 quattro 4.2	09.99-01.05	250	AQJ/ANK
A6 Avant (4B5, C5)	1.8	12.97-01.05	92	ARH/AJP/AQE
	3.7	03.99-01.05	191	AQG
	3.7 quattro	03.99-01.05	191	AQG
	4.2 quattro	11.98-01.05	220	AWN/ARS/ASG
	RS6 plus quattro 4.2	04.04-01.05	353	BRV
	RS6 quattro 4.2	07.02-01.05	331	BCY
	S6 quattro 4.2	09.99-01.05	250	AQJ/ANK
A8 (4D2, 4D8)	3.7	11.98-09.02	191	AKC/AQG
	3.7 quattro	11.98-09.02	191	AKC/AQG
	4.2 quattro	02.99-04.00	175	ARU
	4.2 quattro	11.98-09.02	228	AUW/AQF/AUX
	S 8 quattro 4.2	06.99-09.02	265	AQH/AVP

< CL014

AUDI				
TT (8N3)	1.8 T	09.02-06.06	110	AUM
	1.8 T	10.98-08.00	132	AJQ/APP
	1.8 T quattro	10.98-06.06	132	AJQ
	1.8 T quattro	10.98-06.06	165	APX
TT Roadster (8N9)	1.8 T	10.99-08.00	132	AJQ/APP
VW				
Sharan (7M_)	1.8 T 20V	04.00-03.10	110	AWC

CL015

OEM-No.
VAG 06E 905 115
06E 905 115A
06E 905 115B
06E 905 115C
06E 905 115D
06E 905 115E
06D 905 115

1 coil per cylinder

AUDI				
A4 (8E2, B6)	2.0 FSI	07.02-12.04	110	AWA
	3.2 FSI	01.05-06.08	188	AUK
	3.2 FSI quattro	01.05-06.08	188	AUK/BKH
A4 Avant (8E5, B6)	2.0 FSI	07.02-12.04	110	AWA
	3.2 FSI	01.05-06.08	188	AUK
	3.2 FSI quattro	01.05-06.08	188	AUK
A5 (8T3)	3.0 TFSI quattro	12.11-	200	CMUA
	S5 quattro 3.0	10.11-	245	CGWC/CTDA/CTUB
A5 Cabriolet (8F7)	3.0 TFSI quattro	11.11-	200	CMUA
A5 Sportback (8TA)	3.0 TFSI quattro	12.11-	200	CMUA
A6 (4B2, C5)	2.0	08.01-01.05	96	ALT
A6 (4F2, C6)	2.4	05.04-10.08	130	BDW
	2.4 quattro	01.05-10.08	130	BDW
	2.8 FSI	10.08-03.11	140	CCDA
	2.8 FSI	11.06-10.08	154	BDX
	2.8 FSI	10.08-03.11	162	CCEA
	2.8 FSI quattro	10.08-03.11	140	CCDA
	2.8 FSI quattro	06.07-10.08	154	BDX
	2.8 FSI quattro	10.08-03.11	162	CCEA
	3.0 TFSI quattro	10.08-03.11	213	CAJA
	3.2 FSI	05.04-05.09	188	AUK/BKH
	3.2 FSI quattro	05.04-10.08	188	AUK/BKH
	4.2 FSI quattro	06.06-03.11	257	BVJ
	RS6 quattro 5.0	09.08-08.10	426	BUH
	S6 quattro 5.2	03.06-03.11	320	BXA
A6 (4G2, C7, 4GC)	2.8 FSI	03.11-	150	CHVA
	2.8 FSI quattro	03.11-	150	CHVA
	3.0 TFSI quattro	11.10-05.12	220	CGWB
	3.0 TFSI quattro	03.11-	228	CGWD/CGXB/CTUA
	3.0 TFSI quattro	09.14-	245	CREC
A6 Allroad (4FH, C6)	3.0 TFSI quattro	10.08-08.11	213	CAJA
	3.2 FSI quattro	05.06-10.08	188	AUK
	4.2 FSI quattro	05.06-12.10	257	BVJ
A6 Allroad (4GH, 4GJ)	3.0 TFSI quattro	01.12-	228	CGWD
	3.0 TFSI quattro	09.14-	245	CREC
A6 Avant (4B5, C5)	2.0	08.01-01.05	96	ALT
A6 Avant (4F5, C6)	2.4	03.05-10.08	130	BDW
	2.4 quattro	03.05-10.08	130	BDW
	2.8 FSI	10.08-08.11	140	CCDA
	2.8 FSI	11.06-10.08	154	BDX
	2.8 FSI	10.08-08.11	162	CCEA
	2.8 FSI quattro	10.08-08.11	140	CCDA
	2.8 FSI quattro	06.07-10.08	154	BDX
	2.8 FSI quattro	10.08-08.11	162	CCEA
	3.0 TFSI quattro	10.08-08.11	213	CAJA
	3.0 TFSI quattro	10.08-08.11	220	CCAA

< CL015

AUDI				
A6 Avant (4F5, C6)	3.2 FSI	03.05-10.08	188	AUK
	3.2 FSI quattro	03.05-10.08	188	AUK
	4.2 FSI quattro	06.06-08.11	257	BVJ
	RS6 quattro 5.0	04.08-08.10	426	BUH
	S6 quattro 5.2	03.06-08.11	320	BXA
A6 Avant (4G5, C7)	2.8 FSI	05.11-	150	CHVA
	2.8 FSI quattro	05.11-	150	CHVA
	3.0 TFSI quattro	05.11-05.12	220	CGWB
	3.0 TFSI quattro	11.11-	228	CGWD
	3.0 TFSI quattro	09.14-	245	CREC
A7 Sportback	2.8 FSI	02.11-	150	CHVA
	2.8 FSI quattro	10.10-	150	CHVA/CNYA
	3.0 TFSI quattro	10.10-	220	CGWB/CHMA
	3.0 TFSI quattro	01.11-	228	CTTA/CGWD/CGXB
	3.0 TFSI quattro	05.14-	245	CREC
A8 (4E_)	2.8 FSI	08.07-07.10	154	BDX
	3.2 FSI	06.05-07.10	191	BPK
	3.2 FSI quattro	06.05-07.10	191	BPK
	4.2 FSI quattro	06.06-07.10	257	BVJ
	S8 quattro 5.2	06.06-07.10	331	BSM
A8 (4H_)	3.0 TFSI quattro	06.10-	245	CTDA/CMDA/CTUB
	3.0 TFSI quattro	11.11-	228	CGWD/CREA
	3.0 TFSI quattro	07.10-	213	CGWA/CREG/CGXA
	4.2 FSI quattro	11.09-	273	CDRA
Q7 (4L)	3.0 TFSI	05.10-	200	CJWC/CJTC
	3.0 TFSI	05.11-	206	CTWB/CJWE
	3.0 TFSI	05.10-	245	CJTB/CTWA/CNAA
	4.2 FSI	03.06-05.10	257	BAR
Q7 (4M)	3.0 TFSI	01.15-	245	CREC
R8	4.2 FSI quattro	04.07-09.10	309	BYH
	4.2 FSI quattro	07.10-07.15	316	CNDA
	5.2 FSI quattro	04.09-07.15	386	BUJ/CTYA
	5.2 FSI quattro	07.14-07.15	419	CTPB
R8 Spyder	4.2 FSI quattro	09.10-07.15	316	CNDA
	5.2 FSI quattro	02.10-07.15	386	BUJ/CTYA
VW				
Touareg (7P5)	3.0 V6 TSI Hybrid	04.10-	245	CGFA/CGEA
	4.2 V8 FSI	01.11-	265	CGNA

CL016

OEM-No.
PORSCHE 955 602 101 05
VW 022 905 100 B
022 905 100 E
022 905 100 H
022 905 100 L
022 905 100 P
022 905 100 S
022 905 100 T

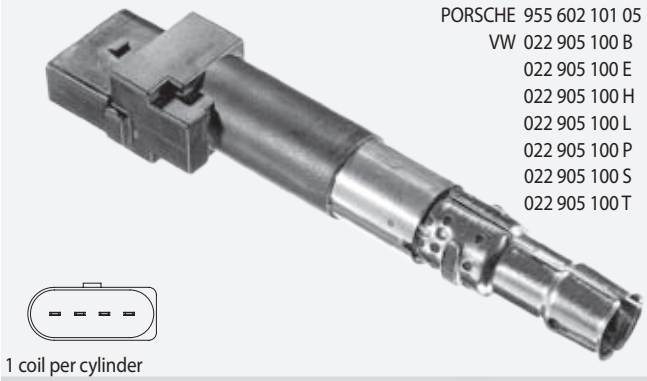

1 coil per cylinder

AUDI				
A3 (8P1)	3.2 V6 quattro	07.03-05.09	184	BDB/BMJ/BUB
A3 Sportback (8PA)	3.2 V6 quattro	09.04-05.09	184	BMJ/BUB
Q7 (4L)	3.6 FSI	08.06-05.10	206	BHK
TT (8N3)	3.2 VR6 quattro	07.03-06.06	184	BPF/BHE
TT (8J3)	3.2 V6 quattro	08.06-06.10	184	BUB
TT Roadster (8N9)	3.2 VR6 quattro	07.03-06.06	184	BPF/BHE
TT Roadster (8J9)	3.2 V6 quattro	03.07-06.10	184	BUB
PORSCHE				
Cayenne (955)	3.2	10.03-09.07	184	M02.2Y
SKODA				
Superb (3T4)	3.6 V6 4x4	11.08-	191	CDVA
Superb Combi (3T5)	3.6 V6 4x4	10.09-	191	CDVA
VW				
CC (358)	3.6 FSI 4motion	11.11-	220	BWS
Eos (1F7, 1F8)	3.2 V6	06.06-05.09	184	CBRA/BUB

CL016 ▶

< CL016

VW				
Eos (1F7, 1F8)	3.6 V6	05.09-11.10	191	CDVA
Golf IV (1J1)	3.2 R32 4motion	09.02-06.05	177	BFH/BML
Golf V (1K1)	3.2 R32 4motion	11.05-11.08	184	CBRA/BUB
Multivan V	3.2 V6	02.04-06.04	170	BDL
	3.2 V6	02.04-11.09	173	BKK/CFLA
	3.2 V6 4motion	07.04-11.09	173	BKK/CFLA
Passat (3C2)	3.2 FSI 4motion	11.05-07.10	184	AXZ
Passat Variant (3C5)	3.6 R36 4motion	04.07-11.10	220	BWS
Phaeton (3D_)	3.2 V6	04.02-	177	AYT/BKL
	3.2 V6 4motion	02.04-	177	BRK/BKL
Touareg (7L_)	3.2 V6	10.02-11.06	162	AZZ/BMV/BKJ/BAA
	3.2 V6	11.04-11.06	177	BMV
	3.6 V6 FSI	10.05-05.10	206	BHL/BHK
Transporter V Bus	3.2 V6	02.04-06.04	170	BDL
	3.2 V6	02.04-11.09	173	BKK/CFLA
	3.2 V6 4motion	11.03-11.09	173	BKK/CFLA
Transporter V Flatbed	3.2 V6	02.04-11.09	170	BDL
	3.2 V6	08.03-05.06	173	BKK
Transporter V Van	3.2 V6	04.03-06.04	170	BDL
	3.2 V6	02.04-11.09	173	BKK/CFLA
	3.2 4motion	11.03-11.09	173	BKK/CFLA

CL017

OEM-No.

VAG 077905115AA
077905115G
077905115J
077905115M
077905115R
077905115S

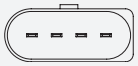

1 coil per cylinder

AUDI				
Allroad (4BH, C5)	4.2 V8 quattro	07.02-08.05	220	BAS
VW				
Phaeton (3D_)	4.2 V8 4motion	05.03-	246	BGJ/BGH
Touareg (7L_)	4.2 V8	12.02-11.06	228	AXQ/BHX

CL018

PIN

OEM-No.

VW 191 905 115 A
211 905 115 D
811 905 115

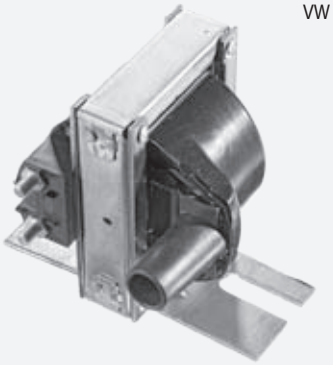

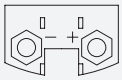

SEAT				
Toledo I (1L)	1.8 16V	05.91-03.99	92	PL
	1.8 16V	05.91-03.99	98	KR
	1.8 i	05.91-12.96	65	RP
VW				
Corrado (53I)	1.8 16V	04.89-07.92	100	KR
	1.8 G60	09.88-09.93	118	PG
Derby (86C, 80)	1.3	08.83-12.84	40	HK
Golf I Cabriolet (155)	1.8	08.83-04.93	70	JH
	1.8	08.89-03.93	72	2H
Golf II (19E, 1G1)	1.0	08.85-10.91	37	HZ

< CL018

VW				
Golf II (19E, 1G1)	1.6	10.86-12.92	51	PN
	1.6	02.86-10.91	53	RF
	1.6	08.83-07.92	55	HM/EZ
	1.8	08.86-01.90	62	RH
	1.8 Syncro	02.86-07.91	66	GX
	1.8 Syncro	08.88-07.91	72	1P
	1.8 GTI	08.83-10.91	82	EV/GZ/PB
	1.8 GTI cat	01.87-10.91	79	PF
	1.8 GTI 16V	02.86-10.91	95	PL
	1.8 GTI 16V	02.86-06.90	102	KR
Jetta II	1.3 cat	06.87-12.91	40	NZ/2G
	1.8	08.86-01.90	62	RH
	1.8	08.84-10.91	66	GX/GU/HV
	1.8	08.85-10.87	79	RD
	1.8 16V	08.86-10.91	95	PL
LT 28-35 I Bus	2.4 i	08.89-06.96	69	1E
LT 28-35 I Flatbed	2.4 i	03.94-06.96	69	1E
LT 28-35 I Van	2.4 i	03.94-06.96	69	1E
LT 40-55 I Flatbed	2.4 i	03.94-06.96	69	1E
LT 40-55 I Van	2.4 i	01.93-06.96	69	1E
Passat (32B)	1.6	08.80-03.88	55	DT
Passat (3A2, 35I)	1.6	02.88-12.88	55	ABN/EZ
	1.8	04.88-07.93	79	PF
	1.8	04.88-07.92	82	PB
	1.8 16V	04.88-12.89	100	KR
	1.8 G60 Syncro	08.88-08.96	118	PG
Passat Sedan (32B)	1.6	01.85-03.88	55	DT
	1.8	01.85-03.88	66	DS/JN
Passat Variant (32B)	1.6	01.85-03.88	55	WV/YN
	1.8 Syncro	01.86-03.88	66	DS/JN
	2.0 Syncro	05.84-03.88	85	JS
Passat Variant (3A5)	1.6	04.88-12.88	55	EZ
	1.8	04.88-07.92	82	PB
	1.8 16V	04.88-12.89	100	KR
	1.8 G60 Syncro	08.88-05.97	118	PG
Polo (86C, 80)	1.3	06.84-09.89	55	GK
	1.3 cat	07.87-10.90	40	NZ/2G
Scirocco (53B)	1.6	01.83-12.89	55	EW

CL019

PIN

OEM-No.

VW 701 905 104
701 905 104 A
867 905 105 A

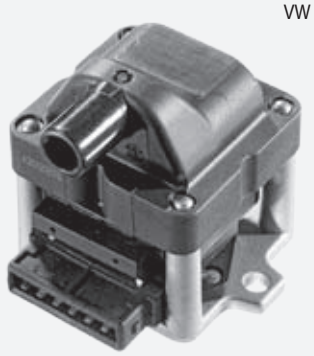

AUDI				
80 Avant (8C, B4)	2.0 E	07.92-01.96	85	ABK
SEAT				
Cordoba (6K1, 6K2)	1.8 i 16V	10.93-08.96	95	ADL
Ibiza II (6K1)	1.8 i	03.93-08.99	66	ADZ/ABS
Toledo I (1L)	2.0 i	05.91-03.99	85	2E
	2.0 i 16V	11.93-03.99	110	ABF
VW				
Golf II (19E, 1G1)	1.3 cat	06.86-12.92	40	NZ
Passat (3A2, 35I)	2.0	02.90-08.96	85	2E
	2.0 Syncro	10.90-08.96	85	2E
	2.0 16V	01.94-08.96	110	ABF
Passat Variant (3A5)	2.0	02.90-05.97	85	2E
	2.0 Syncro	10.90-05.97	85	2E
	2.0 16V	01.94-05.97	110	ABF
Polo (86C, 80)	1.0	08.85-01.92	33	HZ

< CL019

VW				
Polo (86C, 80)	1.3 cat	10.90-09.94	40	NZ/2G
Polo Classic (86C, 80)	1.0	08.86-09.94	33	AAU/HZ/AAK
	1.3 cat	07.87-09.94	40	NZ/MH
Polo Coupe (86C, 80)	1.0	08.85-01.92	33	HZ
	1.0 cat	08.89-09.94	33	AAU/AAK/ACM
	1.3 cat	07.87-08.94	40	NZ/2G/MH/AAV
Polo Van (86CF)	1.3	08.92-07.94	40	AAV
Transporter IV Bus	1.8	12.90-07.92	49	PD
	2.0	09.90-04.03	62	AAC
Transporter IV Flatbed	2.0	07.90-04.03	62	AAC
Transporter IV Van	2.0	07.90-04.03	62	AAC
Vento (1H2)	1.6	09.92-09.98	55	ABU/AEA/AEE

CL020

PIN

OEM-No.
VW 071 905 106

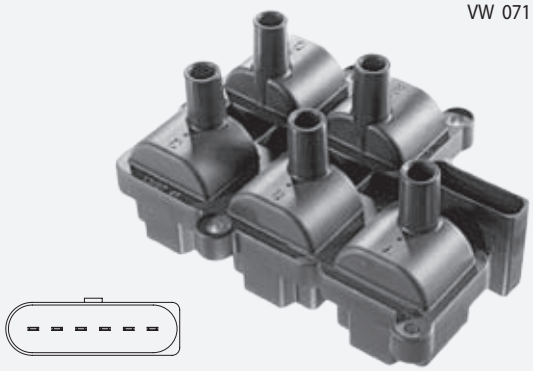

SEAT				
Toledo II (1M2)	2.3 V5	10.98-11.00	110	AGZ
VW				
Bora (1J2)	2.3 V5	10.98-10.00	110	AGZ
	2.3 V5 4motion	12.98-10.00	110	AGZ
Bora Combi (1J6)	2.3 V5	05.99-04.00	110	AGZ
	2.3 V5 4motion	05.99-10.00	110	AGZ
Golf IV (1J1)	2.3 V5	08.97-10.00	110	AGZ
	2.3 V5 4motion	12.98-04.99	110	AGZ
Golf IV Variant (1J5)	2.3 V5	05.99-06.06	110	AGZ
	2.3 V5 4motion	05.99-06.06	110	AGZ
Passat (3B2)	2.3 VR5	10.96-08.97	110	AGZ
	2.3 VR5 Syncro	10.97-11.00	110	AGZ
Passat Variant (3B5)	2.3 VR5	06.97-11.00	110	AGZ
	2.3 VR5 Syncro	10.97-11.00	110	AGZ

CL021

PIN

OEM-No.
FORD 1008464
95VW 12029 AA
MERCEDES 003 158 50 01
A 003 158 50 01
VW 021 905 106
021 905 106 A
310 880 01

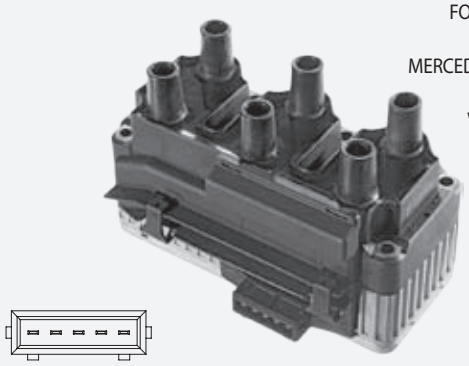

FORD				
Galaxy (WGR)	2.8 i V6	11.95-04.00	128	AAA
	2.8 i V6 4x4	04.96-04.00	128	AAA
MERCEDES				
V-Class (638/2)	V 280	08.97-07.03	128	M 104.900
VW				
Golf III (1H1)	2.8 VR6	01.92-08.97	128	AAA
	2.9 VR6 Syncro	10.94-08.97	140	ABV
Golf III Variant (1H5)	2.9 VR6 Syncro	10.94-04.99	140	ABV
Passat (3A2, 35I)	2.8 VR6	06.91-08.96	128	AAA

< CL021

VW				
Passat Variant (3A5)	2.8 VR6	06.91-05.97	128	AAA
	2.9 VR6 Syncro	01.94-05.97	135	ABV
Sharan (7M_)	2.8 VR6	09.95-04.00	128	AAA
	2.8 VR6 Syncro	11.96-04.00	128	AAA
Transporter IV Bus	2.8 VR 6	11.95-04.00	103	AES
	2.8 VR6	04.00-04.03	150	AMV
	2.8 VR6 Syncro	01.96-04.96	103	AES
Transporter IV Flatbed	2.8	05.96-05.00	103	AES
Transporter IV Van	2.8 VR6	05.96-05.00	103	AES
Vento (1H2)	2.8 VR6	01.92-09.98	128	AAA

CL022

OEM-No.
VW 07C905715
07C905715C
07C905715D
07C905715E
07C905715F
07C905715H
07C905115J

1 coil per cylinder

AUDI				
A8 (4E_)	6.0 W12 quattro	12.03-07.10	331	BTE/BSB/BHT
VW				
Passat (3B3)	4.0 W8 4motion	09.01-09.04	202	BDP/BDN
Passat Variant (3B6)	4.0 W8 4motion	09.01-09.04	202	BDP/BDN
Phaeton (3D_)	6.0 W12 4motion	04.02-	309	BAN
	6.0 W12 4motion	05.05-	331	BTT/BRN
Touareg (7L_)	6.0 W12	08.04-05.10	331	CFRA/BJN

CL023

OEM-No.
FORD 1331283
1362718
VW 022905100A
022905100D
022905100G
022905100K
022905100N

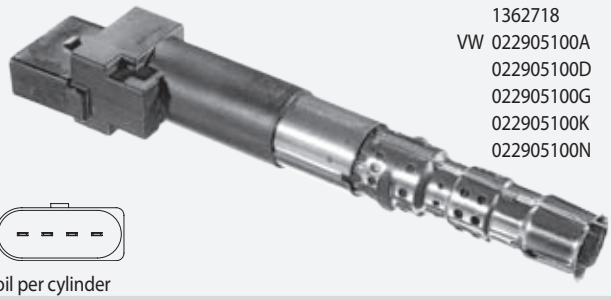

1 coil per cylinder

FORD				
Galaxy (WGR)	2.8 V6	04.00-05.06	150	AYL
SEAT				
Alhambra	2.8 V6	06.00-03.10	150	AYL/AUE
	2.8 V6 4motion	06.00-03.10	150	AYL/AUE
Toledo II (1M2)	2.3 V5 20V	09.00-11.03	125	AQN
VW				
Bora (1J2)	2.3 V5	10.00-05.05	125	AQN
	2.3 V5 4motion	10.00-05.05	125	AQN
	2.8 V6 4motion	05.01-05.05	150	BDE
Bora Combi (1J6)	2.3 V5	10.00-05.05	125	AQN
	2.3 V5 4motion	10.00-05.05	125	AQN
	2.8 V6 4motion	04.01-05.05	150	BDE
	2.8 VR6	03.00-05.00	150	AUE
Golf IV (1J1)	2.3 V5	10.00-06.05	125	AQN
	2.3 V5 4motion	10.00-06.05	125	AQN
	2.8 V6 4motion	05.01-06.05	150	BDE
Golf IV Variant (1J5)	2.3 V5	10.00-06.06	125	AQN
	2.3 V5 4motion	10.00-06.06	125	AQN
	2.8 V6 4motion	05.01-06.06	150	BDE
New Beetle	2.3 V5	10.00-09.10	125	AQN

CL023 ▶

< CL023

VW				
Sharan (7M_)	2.8 V6 24V	04.00-03.10	150	AYL
	2.8 V6 24V 4motion	04.00-03.10	150	AYL

CL024

OEM-No.
VAG 066905100
066905100B
066905100C
066905100D
066905100G

1 coil per cylinder

VW				
Passat (3B3)	2.3 V5	11.00-05.05	125	AZX
	2.3 V5 4motion	11.00-05.05	125	AZX
Passat Variant (3B6)	2.3 VR5	11.00-05.05	125	AZX
	2.3 VR5 4motion	11.00-05.05	125	AZX

CL026

PIN
OEM-No.
AUDI 078905101C

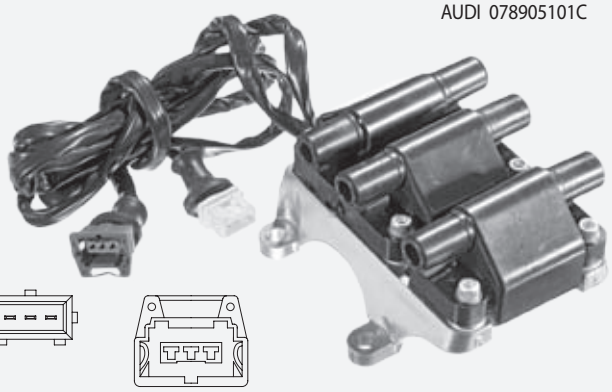

AUDI				
A4 (8D2, B5)	2.6	01.95-11.00	110	ABC
	2.6 quattro	01.95-11.00	110	ABC
	2.8	09.95-07.97	128	AAH
	2.8 quattro	01.95-07.97	128	AAH
A4 Avant (8D5, B5)	2.6	02.96-09.01	110	ABC
	2.6 quattro	01.96-09.01	110	ABC
	2.8	03.96-09.96	128	AAH
	2.8 quattro	01.96-09.96	128	AAH
A6 (4A, C4)	2.8	06.94-10.97	128	AAH
	2.8 quattro	06.94-10.97	128	AAH
A6 Avant (4A, C4)	2.8	06.94-12.97	128	AAH
	2.8 quattro	06.94-12.97	128	AAH
A8 (4D2, 4D8)	2.8	07.95-03.96	120	AEJ
	2.8	03.94-03.96	128	AAH
	2.8 quattro	07.95-03.96	120	AEJ
	2.8 quattro	03.94-03.96	128	AAH

CL028

PIN
OEM-No.
VW 058905101A
058905105A

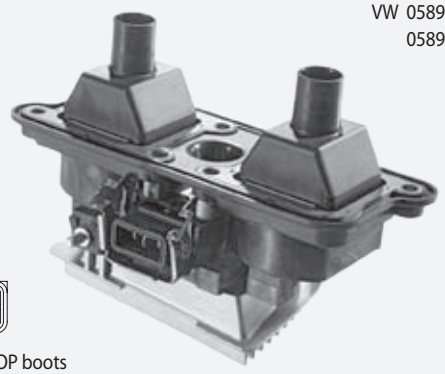

coil without COP boots
semidirect - 1 coil and ignition lead set T594C

AUDI				
A4 (8D2, B5)	1.8	01.95-11.00	92	AVV/ADR/APT/ARG
	1.8 quattro	01.95-11.00	92	ADR/APT/ARG
A4 Avant (8D5, B5)	1.8	02.96-09.01	92	AVV/ADR/APT/ARG
	1.8 quattro	01.96-09.01	92	ADR/APT/ARG
A6 (4A, C4)	1.8	12.95-10.97	92	ADR
	1.8 quattro	12.95-10.97	92	ADR
A6 Avant (4A, C4)	1.8	12.95-12.97	92	ADR
	1.8 quattro	12.95-12.97	92	ADR
Cabriolet (8G7, B4)	1.8	01.97-08.00	92	ADR
VW				
Passat (3B2)	1.8	10.96-11.00	92	ADR/APT/ARG
	1.8 Syncro	10.96-11.00	92	ADR/APT/ARG
Passat Variant (3B5)	1.8	06.97-11.00	92	ADR/APT/ARG
	1.8 Syncro	06.97-11.00	92	ADR/APT/ARG

CL029

OEM-No.
VW 077905115AB
077905115B
077905115C
077905115E
077905115F
077905115H
077905115K
077905115P

1 coil per cylinder

AUDI				
A4 (8E2, B6)	S4 quattro	03.03-12.04	253	BBK
A4 (8EC, B7)	S4 quattro 4.2	11.04-06.08	253	BHF/BBK
A4 Avant (8E5, B6)	S4 quattro 4.2	03.03-12.04	253	BBK
A4 Avant (8ED, B7)	S4 quattro 4.2	11.04-06.08	253	BBK
A4 Cabriolet (8H_, B_)	S4 quattro 4.2	03.04-03.09	253	BBK
A6 (4F2, C6)	4.2 quattro	05.04-05.06	246	BAT
A6 Avant (4F5, C6)	4.2 quattro	03.05-05.06	246	BAT
A8 (4E_)	3.7 quattro	10.02-05.06	206	BFL
	4.2 quattro	10.02-07.10	246	BFM

CL030

PIN

OEM-No.
VAG 021905106B
021905106C

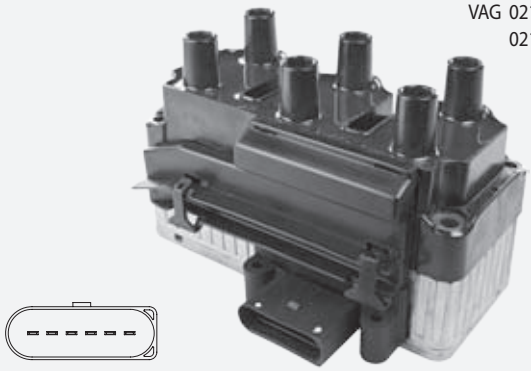

SEAT				
Leon (1M1)	2.8 Cupra 4	02.01-06.06	150	AUE
VW				
Bora (1J2)	2.8 V6 4motion	03.99-04.01	150	AQP/AUE
Bora Combi (1J6)	2.8 V6 4motion	05.99-04.01	150	AQP/AUE
Golf IV (1J1)	2.8 V6 4motion	03.99-04.01	150	AQP/AUE
Golf IV Variant (1J5)	2.8 V6 4motion	05.99-04.01	150	AQP/AUE
New Beetle	3.2 RSI 4motion	04.00-05.01	165	AXJ

CL031

OEM-No.
VAG 04C905110B
04C905110D
04C905110H
04E905110
04E905110A
04E905110B

1 coil per cylinder

AUDI				
A1 (8X1, 8XF)	1.0 TFSI	03.15-	70	CHZB
	1.4 TFSI	11.14-	92	CZCA
	1.4 TFSI	04.12-	103	CPTA
	1.4 TFSI	11.14-	110	CZEA
A1 Sportback (8X_)	1.0 TFSI	03.15-	70	CHZB
	1.4 TFSI	11.14-	92	CZCA/CZDB
	1.4 TFSI	04.12-	103	CPTA
	1.4 TFSI	11.14-	110	CZEA
A3 (8V1)	1.2 TFSI	02.13-	77	CJZA
	1.2 TFSI	05.14-	81	CYVB
	1.4 TFSI	04.12-	90	CMBA/CXSA
	1.4 TFSI	05.14-	92	CXSB/CZCA
	1.4 TFSI	03.13-	103	CPTA
	1.4 TFSI	05.14-	110	CZEA
A3 Cabriolet (8V7)	1.4 TFSI	10.13-	103	CPTA
	1.4 TFSI	05.14-	110	CZEA
A3 Sedan (8VS)	1.2 TFSI	05.14-	81	CYVB
	1.4 TFSI	05.13-	103	CPTA
	1.4 TFSI	05.14-	110	CZEA
A3 Sportback (8VA)	1.2 TFSI	05.13-	77	CJZA
	1.2 TFSI	05.14-	81	CYVB
	1.4 TFSI	09.12-	90	CMBA/CXSA
	1.4 TFSI	05.14-	92	CXSB/CZCA
	1.4 TFSI	03.13-	103	CPTA
	1.4 TFSI	05.14-	110	CZEA
	1.4 TFSI e-tron	05.14-	110	CUKB/CXUA
SEAT				
Ibiza V ST (6J8, 6P8)	1.0	05.15-	55	CHYB
	1.0 TSI	05.15-	70	CHZB
	1.0 TSI	05.15-	81	CHZC
	1.4 TSI	10.13-	103	CPTA
Leon (5F1)	1.2 TSI	12.12-	63	CJZB/CYVA
	1.2 TSI	01.13-	77	CJZA
	1.2 TSI	04.14-	81	CYVB

< CL031

SEAT				
Leon (5F1)	1.4 TSI	11.12-	90	CMBA/CXSA
	1.4 TSI	05.14-	92	CZCA
	1.4 TSI	09.12-	103	CHPA/CPTA
	1.4 TSI	05.14-	110	CZEA
Leon SC (5F5)	1.0 TSI	05.15-	85	CHZD
	1.2 TSI	01.13-	63	CJZB/CYVA
	1.2 TSI	02.13-	77	CJZA
	1.2 TSI	05.14-	81	CYVB
	1.4 TSI	02.13-	90	CMBA/CXSA
	1.4 TSI	05.14-	92	CZCA
	1.4 TSI	02.13-	103	CHPA/CPTA
	1.4 TSI	05.14-	110	CZEA
Leon ST (5F8)	1.0 TSI	05.15-	85	CHZD
	1.2 TSI	08.13-	77	CJZA
	1.2 TSI	05.14-	81	CYVB
	1.4 TGI	10.13-	81	CPWA
	1.4 TSI	10.13-	90	CMBA/CXSA
	1.4 TSI	05.14-	92	CZCA
	1.4 TSI	10.13-	103	CHPA/CPTA
	1.4 TSI	05.14-	110	CZEA
Mii (KF1_)	1.0	10.11-	44	CHYA
	1.0	10.11-	55	CHYB
	1.0 EcoFuel	11.12-	50	CPGA
Toledo IV (KG3)	1.2 TSI	05.15-	81	CJZD
	1.4 TSI	05.15-	92	CZCA
SKODA				
Citigo	1.0	10.11-	44	CHYA
	1.0	10.11-	55	CHYB
	1.0 CNG	11.12-	50	CPGA
Fabia (NJ3)	1.0	08.14-	44	CHYA
	1.0	08.14-	55	CHYB
	1.2 TSI	08.14-	66	CJZC
	1.2 TSI	08.14-	81	CJZD
Fabia Combi (NJ5)	1.0	10.14-	44	CHYA
	1.0	10.14-	55	CHYB
	1.2 TSI	10.14-	66	CJZC
	1.2 TSI	10.14-	81	CJZD
Octavia (5E3)	1.2 TSI	11.12-	63	CJZB
	1.2 TSI	11.12-	77	CJZA
	1.2 TSI	05.15-	81	CYVB
	1.4 TSI	11.12-	103	CHPA
	1.4 TSI	08.14-	110	CZDA/CHPB
	1.4 TSI G-Tec	11.13-	81	CPWA
	1.6	01.14-	81	CWVA
Octavia Combi (5E5)	1.2 TSI	11.12-	63	CJZB
	1.2 TSI	11.12-	77	CJZA
	1.2 TSI	05.15-	81	CYVB
	1.4 TSI	11.12-	103	CHPA
	1.4 TSI	08.14-	110	CZDA/CHPB
	1.4 TSI G-Tec	11.13-	81	CPWA
	1.6	01.14-	81	CWVA
Rapid (NH3)	1.2 TSI	05.15-	66	CJZC
	1.2 TSI	05.15-	81	CJZD
	1.4 TSI	05.15-	92	CZCA
Rapid Spaceback (NH1)	1.2 TSI	05.15-	66	CJZC
	1.4 TSI	05.15-	92	CZCA
Superb (3V3)	1.4 TSI	03.15-	92	CZCA
	1.4 TSI	03.15-	110	CZDA/CZEA
	1.4 TSI 4x4	03.15-	110	CZDA/CZEA
Superb Combi (3V5)	1.4 TSI	03.15-	92	CZCA
	1.4 TSI	03.15-	110	CZDA/CZEA
	1.4 TSI 4x4	03.15-	110	CZDA/CZEA
Yeti (5L)	1.2 TSI	05.15-	81	CYVB
	1.4 TSI	05.15-	92	CZCA
	1.4 TSI 4x4	05.15-	110	CZDA
	1.6	04.14-02.15	81	CWVA
VW				
Beetle (5C1)	1.4 TSI	12.14-	110	CZDA
Beetle Cabriolet	1.4 TSI	12.14-	110	CZDA
Caddy IV Combi	1.2 TSI	06.15-	62	CYVC
	1.4 TSI CNG	06.15-	81	CPWA

CL031 ▶

< CL031

VW				
Caddy IV Combi	1.4 TSI	05.15-	92	CZCB
Caddy IV Van	1.2 TSI	06.15-	62	CYVC
	1.4 TSI CNG	06.15-	81	CPWA
	1.4 TSI	05.15-	92	CZCB
CC (358)	1.4 TSI	05.15-	110	CZDA
Golf VII (5G1, BE1)	1.0 TSI	05.15-	85	CHZA
	1.2 TSI	08.12-	63	CJZB/CYVA
	1.2 TSI	11.12-	77	CJZA
	1.4 GTE Hybrid	05.14-	110	CUKB
	1.4 TGI CNG	06.13-	81	CPWA/CZBA
	1.4 TSI	11.12-	90	CPVA/CMBA/CXSA
	1.4 TSI	05.14-	92	CPVB/CZCA
	1.4 TSI	11.12-	103	CHPA/CPTA
	1.4 TSI MultiFuel	04.13-	90	CPVA
	1.4 TSI MultiFuel	12.13-	92	CPVB
	1.6	05.14-	81	CWVA
Golf VII Combi (BA5)	1.0 TSI	05.15-	85	CHZA
	1.2 TSI	05.13-	63	CJZB/CYVA
	1.2 TSI	05.13-	77	CJZA
	1.2 TSI	04.14-	81	CYVB
	1.4 TGI CNG	09.13-	110	CPWA
	1.4 TSI	05.13-	90	CPVA/CXSA
	1.4 TSI	05.14-	92	CPVB/CZCA
	1.4 TSI	05.13-	103	CHPA
	1.4 TSI	05.14-	110	CHPB/CZDA
	1.4 TSI MultiFuel	04.13-	90	CPVA
	1.4 TSI MultiFuel	05.14-	92	CPVB
	1.6	05.14-	81	CWVA
Golf Sportsvan (AM1)	1.0 TSI	05.15-	85	CHZA
	1.2 TSI	05.14-	63	CYVA
	1.2 TSI	04.14-	81	CYVB
	1.4 TSI	04.14-	92	CPVB/CZCA
	1.4 TSI	02.14-	110	CZDA
	1.4 TSI MultiFuel	04.14-	92	CPVB
	1.6	05.14-	81	CWVA
Jetta IV (162, 163)	1.4 TSI	08.14-	92	CZCA
	1.4 TSI	08.14-	110	CZDA
	1.4 TSI Hybrid	04.11-	110	CNLA/CRJA
Passat (3G2)	1.4 GTE Hybrid	06.15-	115	CUKC
	1.4 TSI	11.14-	92	CZCA
	1.4 TSI	11.14-	110	CZEA
	1.4 TSI 4motion	02.15-	110	CZEA
Passat Variant (3G5)	1.4 GTE Hybrid	06.15-	115	CUKC
	1.4 TSI	11.14-	92	CZCA
	1.4 TSI	11.14-	110	CZEA
	1.4 TSI 4motion	02.15-	110	CZEA
Polo (6R, 6C)	1.0 TSI	11.14-	70	CHZB
	1.0 TSI	11.14-	81	CHZC
	1.2 TSI 16V	07.14-	66	CJZC
	1.4 TSI	10.12-	103	CPTA
	1.6	07.14-	81	CWVA
Scirocco (137, 138)	1.4 TSI	11.13-	92	CXSB/CZCA
Sharan (7N1, 7N2)	1.4 TSI	05.15-	110	CZDA
Tiguan (5N_)	1.4 TSI	05.15-	92	CZDB
Touran	1.2 TSI	09.15-	81	CYVB
	1.4 TSI	09.15-	110	CZDA
Up	1.0	08.11-	44	CHYA
	1.0	08.11-	55	CHYB
	1.0 EcoFuel	11.12-	50	CPGA

CL032

OEM-No.
PORSCHE 95890511000
VAG 06H905110D
06H905110E
06H905110F
06L905110C
06L905110D
06J905110C
06J905110D

1 coil per cylinder

AUDI				
A1 (8X1, 8XF)	1.8 TFSI	02.15-	141	DAJB
A1 Sportback (8X_)	1.8 TFSI	02.15-	141	DAJB
A3 (8V1)	1.8 TFSI	04.12-	132	CJSA
	1.8 TFSI quattro	08.12-	132	CJSB
	S3 quattro 2.0	02.13-	206	CJXB
	S3 quattro 2.0	11.12-	221	CJXC
	S3 quattro 2.0	05.14-	210	CJXF
A3 Cabriolet (8V7)	1.8 TFSI	05.14-	125	CNSB
	1.8 TFSI quattro	03.14-	132	CJSB
	S3 quattro 2.0	03.14-	210	CJXF
A3 Sedan (8VS)	1.8 TFSI	05.13-	132	CJSB/CJSA
	1.8 TFSI quattro	11.13-	132	CJSB
	S3 quattro 2.0	05.14-	210	CJXF
A3 Sportback (8VA)	1.8 TFSI	09.12-	132	CJSB/CJSA
	1.8 TFSI quattro	05.13-	132	CJSB
	S3 quattro 2.0	05.13-	206	CJXB
	S3 quattro 2.0	05.14-	210	CJXF
	S3 quattro 2.0	11.12-	221	CJXC
A4 (8K2, B8)	1.8 TFSI	11.11-	125	CJEB
	1.8 TFSI quattro	11.11-	125	CJEB
A4 Allroad (8KH, B8)	2.0 TFSI quattro	05.13-	165	CNCD
A4 Avant (8K5, B8)	1.8 TFSI	11.11-	125	CJEB
	1.8 TFSI quattro	11.11-	125	CJEB
	2.0 TFSI	05.13-	165	CNCD
	2.0 TFSI quattro	05.13-	165	CNCD
A5 (8T3)	2.0 TFSI	05.13-	165	CNCD
	2.0 TFSI quattro	05.13-	165	CNCD
A5 Cabriolet (8F7)	1.8 TFSI	10.11-	125	CABD/CJEB
A5 Sportback (8TA)	1.8 TFSI	08.11-	125	CJEB
	1.8 TFSI	09.14-	106	CJED
	2.0 TFSI	05.13-	165	CNCD
	2.0 TFSI quattro	05.13-	165	CNCD
A6 (4G2, C7, 4GC)	1.8 TFSI	09.14-	140	CYGA
	2.0 TFSI	09.14-	185	CYNB/CYPA
	2.0 TFSI quattro	05.14-	185	CYNB/CYPA
A6 Avant (4G5,4GD)	1.8 TFSI	09.14-	140	CYGA
	2.0 TFSI	09.14-	185	CYNB/CYPA
A7 Sportback (4G_)	2.0 TFSI	09.14-	185	CYPA
Q3 (8U)	2.0 TFSI	05.15-	132	CULB
	2.0 TFSI quattro	11.14-	132	CULB
TT (FV3)	2.0 TFSI	07.14-	169	CHHC
	2.0 TFSI quattro	07.14-	169	CHHC
TT Roadster (FV9)	2.0 TFSI	11.14-	169	CHHC
	2.0 TFSI quattro	11.14-	169	CHHC
PORSCHE				
Macan	2.0	07.14-	174	MCN.CC/MCY.NA
SEAT				
Alhambra (710, 711)	2.0 TSI	05.15-	162	DEDA
Leon (5F1)	1.8 TSI	02.13-	132	CJSB/CJSA
	2.0 Cupra	10.13-	195	CJXE
	2.0 Cupra	10.13-	206	CJXA
Leon SC (5F5)	1.8 TSI	02.13-	132	CJSB/CJSA
	2.0 Cupra	10.13-	195	CJXE
	2.0 Cupra	10.13-	206	CJXA
Leon ST (5F8)	1.8 TSI	10.13-	132	CJSB/CJSA
	1.8 TSI 4Drive	11.14-	132	CJSA
	2.0 Cupra	10.13-	195	CJXE
	2.0 Cupra	10.13-	206	CJXA

< CL032

SKODA				
Octavia (5E3)	1.8 TSI	11.12-	132	CJSA
	1.8 TSI 4x4	09.14-	132	CJSA
	2.0 TSI RS	05.13-	162	CHHB
	2.0 TSI RS	05.15-	169	CHHA
Octavia Combi (5E5)	1.8 TSI	11.12-	132	CJSB/CJSA
	1.8 TSI 4x4	11.12-	132	CJSB
	2.0 TSI RS	11.12-	162	CHHB
	2.0 TSI RS	05.15-	169	CHHA
Superb (3V3)	1.8 TSI	03.15-	132	CJSA/CJSC
	2.0 TSI	03.15-	162	CHHB
	2.0 TSI 4x4	03.15-	206	CJXA
Superb Combi (3V5)	1.8 TSI	03.15-	132	CJSA/CJSC
	2.0 TSI	03.15-	162	CHHB
	2.0 TSI 4x4	03.15-	206	CJXA
VW				
Beetle (5C1)	2.0 TSI	12.12-	155	CPPA/CPLA
	2.0 TSI	12.14-	162	CULC
Beetle Cabriolet (5C7)	1.8 TSI	12.13-	125	CPKA/CPRA
	2.0 TSI	12.12-	155	CPPA/CPLA
	2.0 TSI	12.14-	162	CULC
Eos (1F7, 1F8)	2.0 TFSI	11.13-	162	CULC
Golf VI Cabriolet (517)	2.0 TSI	11.13-	162	CULC
Golf VII (5G1, BE1)	2.0 GTI	11.13-	155	CNTA/CXCA
	2.0 GTI	04.13-	162	CXDA/CHHB
	2.0 GTI	04.13-	169	CHHA
	2.0 R 4motion	11.13-	206	CJXB
	2.0 R 4motion	11.13-	221	CJXC
Golf VII Combi (BA5)	2.0 R 4motion	03.15-	206	CJXB
	2.0 R 4motion	03.15-	221	CJXC
Golf Alltrack (BA5)	1.8 TSI 4motion	12.14-	132	CJSB
Jetta IV (162, 163)	1.8 TSI	07.14-	125	CPKA/CPRA
	2.0 TSI	12.12-	155	CPPA/CPLA
Passat (3G2)	1.8 TSI	02.15-	132	CJSA/CJSC
	2.0 TSI	05.15-	162	CHHB
	2.0 TSI 4motion	05.15-	206	CJXA
Passat Alltrack (3G5)	2.0 TSI 4motion	07.15-	162	CHHB
	1.8 TSI	02.15-	132	CJSA/CJSC
	2.0 TSI	05.15-	162	CHHB
	2.0 TSI 4motion	05.15-	206	CJXA
Polo (6R, 6C)	1.8 GTI	11.14-	141	DAJA/DAJB
Scirocco (137, 138)	2.0 TSI	11.13-	132	CULA
	2.0 TSI	11.13-	162	CULC
Sharan (7N1, 7N2)	2.0 TSI	05.15-	162	DEDA

CL033

OEM-No.
VW 034905101
034905105

1 coil per cylinder

AUDI				
80 (8C, B4)	S2 quattro	02.93-12.94	169	ABY
80 Avant (8C, B4)	RS2 quattro	03.94-05.95	232	ADU
	S2 quattro	02.93-07.95	169	ABY
100 (4A, C4)	S4 Turbo quattro	08.91-06.94	169	AAN
100 Avant (4A, C4)	S4 Turbo quattro	09.91-06.94	169	AAN
A6 (4A, C4)	S6 Turbo quattro	06.94-10.97	169	AAN
A6 Avant (4A, C4)	S6 Turbo quattro	06.94-12.97	169	AAN
Coupe (89, 8B)	S2 quattro 2.2	10.92-12.96	169	ABY

CL034

OEM-No.
VW 06C905115A
06C905115B
06C905115D
06C905115E
06C905115F
06C905115G
06C905115H
06C905115K

1 coil per cylinder

AUDI				
A4 (8E2, B6)	2.0	11.00-12.04	96	ALT
	3.0	11.00-12.04	162	ASN/AVK
	3.0	04.01-12.04	160	BBJ
	3.0 quattro	11.00-12.04	162	ASN/AVK
	3.0 quattro	04.01-12.04	160	BBJ
A4 (8EC, B7)	3.0 quattro	11.04-07.06	160	BBJ
A4 Avant (8E5, B6)	2.0	09.01-12.04	96	ALT
	3.0	09.01-12.04	162	ASN
	3.0	04.01-12.04	160	BBJ
	3.0 quattro	09.01-12.04	162	ASN/AVK
	3.0 quattro	04.01-12.04	160	BBJ
A4 Avant (8ED, B7)	3.0	11.04-05.06	160	BBJ
	3.0 quattro	11.04-07.06	160	BBJ
A4 Cabriolet (8H_, B_)	2.0	09.04-12.05	96	ALT
	3.0	04.02-12.05	162	ASN
	3.0 quattro	05.03-12.05	162	ASN
A6 (4B2, C5)	3.0	08.01-01.05	162	ASN
	3.0 quattro	08.01-01.05	162	ASN
A6 (4F2, C6)	3.0 quattro	05.04-05.06	160	BBJ
A6 Avant (4B5, C5)	3.0	08.01-01.05	162	ASN
	3.0 quattro	08.01-01.05	162	ASN
A6 Avant (4F5, C6)	3.0	03.05-05.06	160	BBJ
	3.0 quattro	03.05-05.06	160	BBJ
A8 (4E_)	3.0	07.03-05.05	162	ASN
	3.0	07.03-05.06	160	BBJ

CL100

OEM-No.
NISSAN 22448-00QA
OPEL 4408389
4413233
4413223
RENAULT 77 00 107 177
77 00 113 357
77 00 875 000
82 00 154 186

1 coil per cylinder

DACIA				
Duster	1.6 16V	04.10-	77	K4M 696/K4M 690
	1.6 16V 4x4	06.10-	77	K4M 606
	1.6 16V LPG	04.11-	77	K4M 696
Logan (LS_)	1.6 16V (LS0M)	02.06-	77	K4M 696/K4M 690
Logan MCV (KS_)	1.6 16V	02.07-	77	K4M 696/K4M 690
	1.6 16V Hi-Flex	11.09-	77	K4M 694/K4M 690
Sandero II	1.6 16V	01.13-	77	K4M 694/K4M 845
LADA (VAZ)				
Largus Combi	1.6	03.12-	77	VAZ- K4M
Largus Van	1.6	03.12-	77	VAZ- K4M
NISSAN				
Kubistar (X76)	1.6 16V	08.03-10.09	70	K4M 752

CL100 ▶

< CL100

NISSAN				
Kubistar Van (X80)	1.6 16V	08.03-	70	K4M 752
Primastar Bus (X83)	2.0	03.01-	88	F4R 722/F4R 720
Primastar Van (X83)	2.0	02.03-	88	F4R 720
OPEL (VAUXHALL)				
Vivaro Combi (J7)	2.0 16V	08.01-	88	F4R 720
	2.0 Ecotec	08.06-	86	F4R 820
Vivaro Flatbed (E7)	2.0 16V	08.06-	88	F4R 720
	2.0 Ecotec	08.06-	86	F4R 820
Vivaro Van (F7)	2.0 16V	08.01-	88	F4R 720
	2.0 Ecotec	08.06-	86	F4R 820
RENAULT				
Avantime (DE0_)	2.0 16V Turbo	11.01-05.03	120	F4R 760/F4R 761
Clio Grandtour (KR)	1.4 16V	02.10-	72	K4J 780
	1.6 16V	02.08-	82	K4M 800/K4M 801
	1.6 16V	11.08-	94	K4M 862
Clio II	1.4 16V	10.99-09.04	70	K4J 712/K4J 713
	1.4 16V	08.00-	72	K4J 71_/K4J 711
	1.6 16V	09.98-	79	K4M 74_/K4M 708
Clio III (BR0/1, CR0/1)	1.4 16V	06.05-	72	K4J 780
	1.6 16V	06.05-	82	K4M 800/K4M 801
	1.6 16V	06.05-	65	K4M 804
	1.6 16V GT	06.09-	94	K4M 862
	2.0 16V Sport	02.06-	145	F4R 830
	2.0 16V Sport	09.08-	148	F4R 830
Duster	1.6 16V	02.12-	75	K4M 616
	2.0	02.12-	98	
Espace III (JE0_)	2.0	09.01-10.02	102	F4R 701/F4R 700
	2.0 16V	10.98-10.02	103	F4R 701/F4R 700
Espace IV (JK0/1_)	2.0	11.02-	100	F4R 792
	2.0	04.05-	125	F4R 89_/F4R 79_
	2.0 Turbo	11.02-	120	F4R 796/_795/_794
Fluence (L30_)	1.6 16V	02.10-	81	K4M 839/K4M 838
Grand Scénic II	1.6	04.04-	83	K4M 761/K4M 782
	2.0	04.04-	99	F4R 771/F4R 770
	2.0	04.04-	120	F4R 776
Grand Scénic III	1.6 16V	02.09-	81	K4M 858
Kangoo (KC0/1_)	1.6 16V	06.01-	70	K4M 750/_753/_752
	1.6 16V 4x4	10.01-	70	K4M 750/_753/_752
Kangoo/Grand Kangoo	1.6 16V Hi-Flex	02.08-	78	K4M 834/K4M 850
	1.6 16V	02.08-	78	K4M 830/K4M 831
Kangoo BeBop (KW)	1.6	02.09-	78	K4M 830
Kangoo Express (FC)	1.6 16V	10.01-	70	K4M 752
	1.6 16V 4x4	10.01-	70	K4M 750/_753/_752
Kangoo Express (FW)	1.6 16V	02.08-	78	K4M 830
	1.6 16V LPG	02.08-	72	K4M 834
Laguna Coupe (DT)	2.0 16V Turbo	09.08-	125	F4Rt 811/F4R 811
	2.0 GT	09.08-	150	F4R 800
Laguna I (B56_, 556_)	1.6 16V	03.99-03.01	79	K4M 720/K4M 724
	1.8 16V	04.98-03.01	88	F4P 760
	2.0	09.99-02.01	102	F4R 780
	2.0 16V	09.99-03.01	103	F4R 780
Laguna I Grandtour	1.6 16V	03.99-03.01	79	K4M 720/K4M 724
	1.8 16V	04.98-03.01	88	F4P 760
	2.0 16V	09.99-03.01	103	F4R 780
Laguna II (BG0/1_)	1.6 16V	03.01-	79	K4M 714/K4M 710
	1.6 16V	02.05-	82	K4M 716
	1.8 16V	03.01-	86	F4P 774/F4P 770
	1.8 16V	03.01-	85	F4P 77_
	1.8 16V	03.01-	88	F4P 770/F4P 773
	1.8 16V	03.01-	89	F4P 772/F4P 770
	2.0 16V	08.02-	99	F4R 713/715/712/714
	2.0 16V	01.05-	125	F4R 787/_786/_784
	2.0 16V	01.05-	150	F4R 887/F4R 886
	2.0 16V Turbo	01.03-	120	F4R 764/_787/_765
Laguna II Grandtour	1.6 16V	02.05-	82	K4M 716
	1.6 16V	03.01-	79	K4M 714/K4M 710
	1.8 16V	03.01-	85	F4P 774/770/771/775
	1.8 16V	03.01-	86	F4P 770
	1.8 16V	03.01-	88	F4P 770/F4P 773
	1.8 16V	03.01-	89	F4P 774/F4P 770
	2.0 16V	08.02-	99	F4R 713/715/712/714

< CL100

RENAULT				
Laguna II Grandtour	2.0 16V	01.05-	125	F4R 787/_786/_784
	2.0 16V	01.05-	150	F4R 887/F4R 886
	2.0 16V Turbo	01.03-	120	F4R 764/_787/_765
Laguna III (BT0/1)	1.6 16V	10.07-	81	K4M 824
	2.0 16V Turbo	10.07-	125	F4R 811
	2.0 GT	03.08-	150	F4R 800
Laguna III Grandtour	1.6 16V	10.07-	81	K4M 824
	2.0 16V Turbo	10.07-	125	F4R 811
	2.0 GT	03.08-	150	F4R 800
Logan I (LS_)	1.6	04.07-	77	K4M 690
Logan I Combi (KS_)	1.6	04.07-	77	K4M 697
Megane CC (EZ0/1_)	1.6 16V	06.10-	81	K4M 858
	2.0 TCe	06.10-	132	F4R 870/F4R 872
Megane I (BA0/1_)	1.4 16V	03.99-08.03	70	K4J 714/K4J 750
	1.6 16V	03.99-08.03	79	K4M 704/_700/_708
	1.8 16V	01.01-08.03	85	F4P 722/F4P 720
Megane I Cabrio (EA)	1.4 16V	03.99-08.03	70	K4J 714/K4J 750
	1.6 16V	03.99-08.03	79	K4M 700/_708/_701
	2.0 16V	01.02-08.03	102	F4R 746/F4R 770
Megane I Classic (LA)	1.4 16V	03.99-08.03	70	K4J 714/K4J 750
	1.6 16V	03.99-08.03	79	K4M 700/_708/_701
	1.8 16V	01.01-08.03	85	F4P 722/F4P 720
Megane I Coach (DA)	1.4 16V	03.99-08.03	70	K4J 714/K4J 750
	1.6 16V	03.99-08.03	79	K4M 700/_708/_701
	2.0 16V	01.02-08.03	102	F4R 746
Megane I Grandtour	1.4 16V	03.99-08.03	70	K4J 714/K4J 750
	1.6 16V	03.99-08.03	79	K4M 704/_700/_708
	1.8 16V	01.01-08.03	85	F4P 722/F4P 720
Megane II (BM, CM)	1.4 16V	10.03-02.08	60	K4J 732
	1.4 16V	11.02-02.08	72	K4J 740/K4J 730
	1.6	06.05-02.08	77	K4M 788
	1.6 16V	01.06-06.08	82	K4M 812/_760/_813
	1.6 16V	11.02-02.08	83	K4M 760
	1.6 Flex-Fuel	01.07-02.08	77	K4M 788
	2.0	08.06-02.08	169	F4R 774
	2.0 16V	11.02-02.08	99	F4R 770
	2.0 16V Turbo	05.04-02.08	120	F4R 776
	2.0 Sport	05.04-10.09	165	F4R 774/F4Rt 774
Megane II Combi (KM)	1.4	08.03-07.09	72	K4J 740/K4J 730
	1.6	08.03-07.09	83	K4M 760/K4M 761
	1.6 16V	01.06-08.09	82	K4M 812/_760/_813
	1.6 16V Hi-Flex	02.08-07.09	77	K4M 856
	2.0	08.03-07.09	99	F4R 771/F4R 770
Megane II Coupe	1.6	09.03-03.09	83	K4M 760/K4M 761
	1.6 16V	01.06-06.08	82	K4M 812/_760/_813
	2.0	09.03-12.09	99	F4R 771/F4R 770
	2.0 16V Turbo	05.04-03.09	120	F4R 776
Megane II Sedan (LM)	1.4	09.03-	60	K4J 732
	1.4	09.03-	72	K4J 740/K4J 730
	1.6	05.05-	77	K4M 762
	1.6	09.03-	83	K4M 760/K4M 761
	1.6 16V	01.06-	82	K4M 812/K4M 813
	2.0	09.03-	99	F4R 771/F4R 770
Megane III CC (BZ	1.6 16V	11.08-	74	K4M 848
	1.6 16V	11.08-	81	K4M 858
	1.6 16V BiFuel	11.08-	81	K4M 866
	2.0 TCe	11.08-	132	F4R 870
Megane III Coupe	1.6 16V	11.08-	74	K4M 848
	1.6 16V	11.08-	81	K4M 858
	1.6 16V BiFuel	11.08-	81	K4M 866
	2.0 TCe	11.08-	132	F4R 870
	2.0 TCe	05.09-	184	F4R 874
Megane III Grandtour	1.6 16V	05.09-	74	K4M 848
	1.6 16V	05.09-	81	K4M 858
	1.6 16V BiFuel	11.08-	81	K4M 866
	2.0 TCe	11.08-	132	F4R 870/F4R 872
Megane Scenic (JA)	1.6 16V	04.98-10.99	79	K4M 704/_700/_708
Modus / Grand Modus	1.4	12.04-	72	K4J 780/K4J 770
	1.6	12.04-	65	K4M 794
	1.6	12.04-	82	K4M 790/_800/_801
Sandero/Stepway I	1.6	12.07-	76	

< CL100

RENAULT

Scénic I (JA)	1.4 16V	09.99-08.03	70	K4J 714/K4J 750
	1.8 16V	01.01-08.03	85	F4P 722/F4P 720
	2.0 16V	07.00-08.03	102	F4R 741/_740/_746
	2.0 16V	09.99-08.03	103	F4R 741/_740/_744/
	2.0 16V RX4	06.00-08.03	102	F4R 746/F4R 744
Scénic II (JM)	1.4	06.03-	72	K4J 740/_730/_770
	1.6	06.03-	83	K4M 761/K4M 782
	1.6 16V	10.05-	82	K4M 812/_766/_813
	2.0	06.03-	99	F4R 771/F4R 770
	2.0 16V Turbo	05.04-	120	F4R 776
Scénic III (JZ)	1.6 16V	02.09-	81	K4M 858
	1.6 E85	02.09-	81	K4M 866
Thalia I (LB0/1/2_)	1.4 16V	08.00-	72	K4J 712
Trafic II Bus (JL)	2.0	03.01-	88	F4R 722/F4R 720
	2.0 16V	08.06-	86	F4R 820
Trafic II Flatbed (EL)	2.0	03.01-	88	F4R 720
	2.0 16V	08.06-	86	F4R 820
Trafic II Van (FL)	2.0	03.01-	88	F4R 722/F4R 720
	2.0 16V	08.06-	86	F4R 820
Twingo II (CN0_)	1.6 RS	05.08-	98	K4M 854
Vel Satis (BJ0_)	2.0 16V Turbo	06.02-	120	F4R 762/F4R 763
	2.0 16 V Turbo	04.04-	125	F4R 766/F4R 767
	3.5 V6	06.02-	177	V4Y 701/V4Y 711
Wind (E4M_)	1.6	07.10-	98	K4M 854

CL101

SAE — OEM-No. RENAULT 7701041608

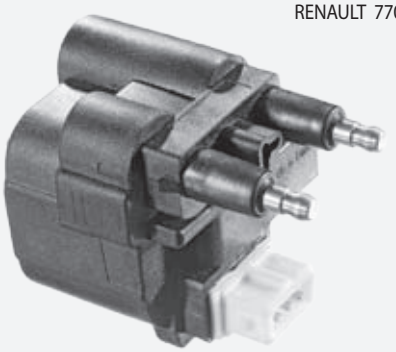

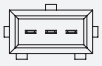

for cylinder 2 & 3 (coil CL103: 1 & 4)

RENAULT

Megane I (BA)	1.6 e	01.96-03.97	66	K7M 702/_703/_790
	1.6 i	01.96-03.97	55	K7M 720
Megane I Cabrio (EA)	1.6 e	10.96-03.97	66	K7M 702/K7M 703
Megane I Classic (LA)	1.6 e	09.96-03.97	66	K7M 702/_703/_790
	1.6 i	09.96-03.97	55	K7M 720
Megane I Coach (DA)	1.6 e	03.96-03.97	66	K7M 702/K7M 703
Megane I Grandtour	1.6 e	03.99-08.03	66	K7M 702/K7M 703
Megane Scenic (JA)	1.6 e	10.96-03.97	66	K7M 702/K7M 703
	1.6 i	01.97-03.97	55	K7M 720

CL102

PIN — OEM-No. RENAULT 7700100643

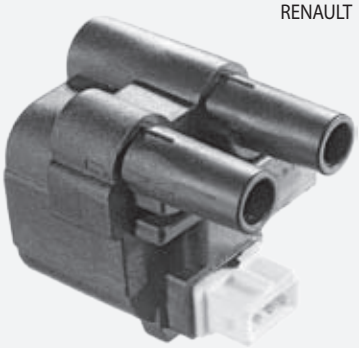

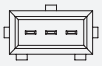

for cylinder 2 & 3 (CL128: 1 & 4)

RENAULT

Clio II	1.4	09.98-05.05	55	E7J 634/780/K7J 700
	1.6	09.98-05.05	66	K7M 744/K7M 745

< CL102

RENAULT

Kangoo (KC)	1.4	08.97-	55	E7J 634/635 /K7J 701
Kangoo Express (FC)	1.4	08.97-	55	E7J 634/635 /K7J 701
Laguna I (B56)	1.6 16V	11.97-03.99	79	K4M 720/K4M 724
Laguna I Grandtour	1.6 16V	11.97-03.99	79	K4M 720/K4M 724
Megane I (BA)	1.6 e	03.97-03.99	66	K7M 702/_703/_790
	1.6 i	03.97-03.99	55	K7M 720
Megane I Cabriolet	1.6 e	04.97-03.99	66	K7M 702/K7M 703
Megane I Classic (LA)	1.6 e	04.97-03.99	66	K7M 702/_703/_790
Megane I Coach (DA)	1.6 e	03.97-03.99	66	K7M 702/K7M 703
Megane Scenic (JA)	1.6 e	04.97-10.99	66	K7M 702/K7M 703
	1.6 i	04.97-09.99	55	K7M 720

CL103

SAE — OEM-No. RENAULT 7701041607, 708633020-7

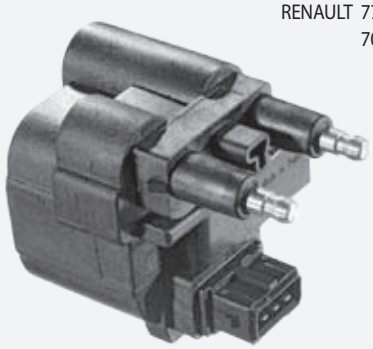

for cylinder 1 & 4 (coil CL101: 2 & 3)

RENAULT

Megane I (BA)	1.6 e	01.96-03.97	66	K7M 702/_703/_790
	1.6 i	01.96-03.97	55	K7M 720
Megane I Cabriolet	1.6 e	10.96-03.97	66	K7M 702/K7M 703
Megane I Classic (LA)	1.6 e	09.96-03.97	66	K7M 702/_703/_790
	1.6 i	09.96-03.97	55	K7M 720
Megane I Coach (DA)	1.6 e	03.96-03.97	66	K7M 702/K7M 703
Megane I Grandtour	1.6 e	03.99-08.03	66	K7M 702/K7M 703
Megane Scenic (JA)	1.6 e	10.96-03.97	66	K7M 702/K7M 703
	1.6 i	01.97-03.97	55	K7M 720

CL104

OEM-No. PSA 5970.80, 96363378, 9636337880, 9636997880

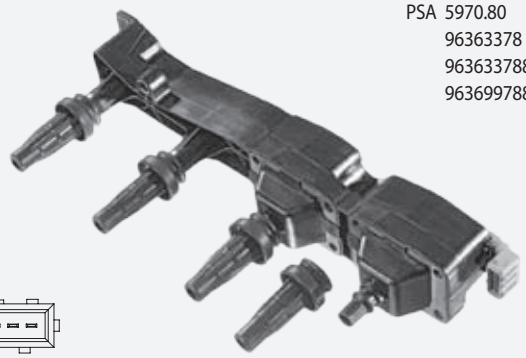

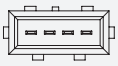

CITROEN

Berlingo (B9)	1.6	04.08-	66	NFR (TU5JP4B)
	1.6	04.08-	80	NFU (TU5JP4)
Berlingo (MF)	1.6 16V	10.00-	80	NFU (TU5JP4)
Berlingo Van (B9)	1.6	04.08-	66	NFR (TU5JP4B)
	1.6	04.08-	80	NFU (TU5JP4)
Berlingo Van (M_)	1.6 16V	10.00-	80	NFU (TU5JP4)
C2 (JM_)	1.6	09.03-	80	NFU (TU5JP4)
	1.6 VTS	01.05-	90	NFS (TU5JP4S)
C3 I (FC_)	1.6 16V	02.02-	80	NFU (TU5JP4)
C3 Pluriel (HB_)	1.6	05.03-	80	NFU (TU5JP4)
C4 Coupe (LA_)	1.6 16V	11.04-07.11	80	NFU (TU5JP4)
C4 I (LC_)	1.6 16V	11.04-07.11	80	NFU (TU5JP4)
	1.6 16V Bio-Flex	09.07-07.08	80	NFU (TU5JP4)
Xsara (N1)	1.6 16V	09.00-03.05	80	NFU (TU5JP4)
Xsara Break (N2)	1.6 16V	09.00-08.05	80	NFU (TU5JP4)

CL104 ▶

< CL104

CITROEN				
Xsara Coupe (N0)	1.6 16V	09.00-03.05	80	NFU (TU5JP4)
Xsara Picasso (N68)	1.6 16V	09.05-	80	NFU (TU5JP4)
PEUGEOT				
1007 (KM_)	1.6 16V	04.05-	80	NFU (TU5JP4)
206 CC (2A/C)	1.6 16V	12.00-	80	NFU (TU5JP4)
206 CC (2D)	1.6 16V	09.00-	80	NFU (TU5JP4)
206 Sedan	1.6 16V	03.07-	80	NFU (TU5JP4)
206 SW (2E/K)	1.6 16V	07.02-	80	NFU (TU5JP4)
206+ (T3E)	1.6 16V	07.10-	80	NFU (TU5JP4)
207 (WA_, WC_)	1.6 16V	02.06-	80	NFU (TU5JP4)
307 (3A/C)	1.6 16V	08.00-	80	NFU (TU5JP4)
307 Break (3E)	1.6 16V	03.02-	80	NFU (TU5JP4)
307 CC (3B)	1.6 16V	02.05-	80	NFU (TU5JP4)
307 SW (3H)	1.6 16V	03.02-	80	NFU (TU5JP4)
308 (4A_, 4C_)	1.6 Bioflex	04.08-	80	NFU (TU5JP4)
308 SW	1.6 Bioflex	03.09-	82	NFU (TU5JP4)
Partner Combispace	1.6 16V	07.01-	80	NFU (TU5JP4)
Partner Tepee	1.6	04.08-	66	NFR (TU5JP4B)
	1.6	04.08-	80	NFU (TU5JP4)
Partner Van	1.6	04.08-	66	NFR (TU5JP4B)
	1.6	04.08-	80	NFU (TU5JP4)

CL105

OEM-No.

PSA 5970.50
9611412080

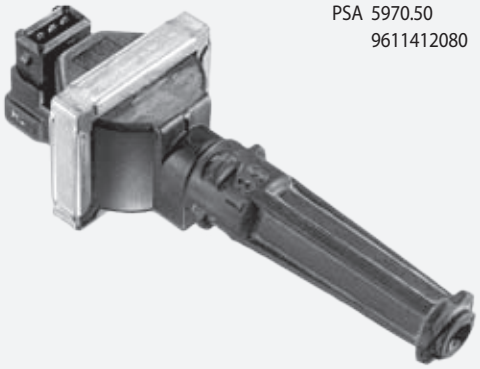

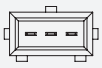

1 coil per cylinder

CITROEN				
Xantia (X1)	2.0 i 16V	03.93-01.98	112	RFY (XU10J4/Z)
	2.0 i 16V	06.94-01.98	110	RFT (XU10J4/Z)
ZX (N2)	2.0 i 16V	06.94-06.97	110	RFT (XU10J4/Z)
	2.0 i 16V	07.92-10.94	112	RFT /RFY
	2.0 i 16V	05.96-06.97	120	RFS (XU10J4RS)
PEUGEOT				
306 (7B, N3, N5)	2.0 S16	06.94-05.01	110	RFT (XU10J4)
	2.0 S16	06.94-05.01	112	RFY (XU10J4Z)
306 CC (7_, N_)	2.0 S16	06.94-05.01	110	RFT (XU10J4)
	2.0 S16	05.93-05.01	112	RFY (XU10J4Z)
405 II (4B)	2.0 T 16 X4	08.92-10.95	144	RGZ (XU10J4TE/Z)
405 II Break (4E)	2.0 4x4	08.92-12.95	144	RGZ (XU10J4TE/Z)

CL106

PIN

OEM-No.

PSA 5970.49
96062288
9616597080
ROVER GCL204

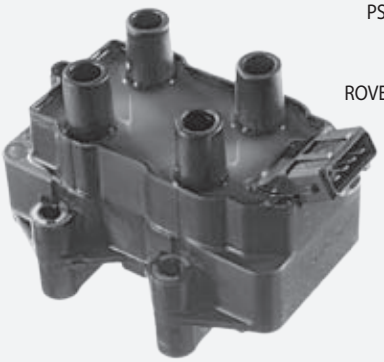

CITROEN				
AX (ZA-_)	10	01.92-12.98	33	CDY (TU9M)
	10	02.87-12.98	37	CDZ (TU9M)

< CL106

CITROEN				
AX (ZA-_)	11	05.92-12.97	44	HDZ (TU1M)/H1B
	14	01.93-04.97	55	KDY/KDX
	14 4x4	01.93-12.96	55	KDY/KDX
	1.4 GTi	08.91-12.96	66	KFY (TU3FJ2)
	1.4 GTi	06.91-12.96	69	KFZ (TU3FJ2)
	1.4 GTi	06.91-12.92	74	KFZ (TU3FJ2)
ZX (N2)	1.4	03.91-06.97	55	KDZ (TU3M/Z)
	1.4 i	03.91-06.97	55	KDZ/KFX/KDX
ZX Break (N2)	1.4 i	10.93-10.97	55	KFX/KDX/KDY
PEUGEOT				
106 I (1A, 1C)	1.0	09.91-04.96	33	TU9/CDY (TU9M)
	1.0	09.91-04.96	37	CDZ (TU9M)
	1.1	09.91-04.96	44	HDZ (TU1M)
	1.3	10.93-04.96	72	TU2J2
	1.4	03.94-04.96	55	KDX (TU3MC)
	1.4	09.91-04.96	69	KFZ (TU3J2/Z)
	1.6	06.93-04.96	65	NFZ (TU5JP)
	1.6	01.94-04.96	76	NFY (TU5J2)
106 II (1)	1.6 i	05.96-	65	NFZ (TU5JP)
	1.6 i	05.96-	74	NFW/NFY
306 (7B, N3, N5)	1.1	06.94-05.01	44	HDZ (TU1M)
	1.4 SL	06.94-06.97	55	KDX/KFX/KFW
	1.6 SR	06.94-06.98	65	NFZ (TU5JP)
306 Break	1.6	03.97-07.98	65	NFZ (TU5JP)
306 Cabriolet	1.6	04.96-10.00	65	NFZ (TU5JP)
306 CC (7_, N_)	1.1	05.93-05.01	44	HDZ (TU1M)
	1.4	05.93-05.97	55	KDX/KFX/KFW
	1.6	05.93-10.00	65	NFZ (TU5JP)
405 II (4B)	1.4	08.92-10.95	55	KDX (TU3MC)
405 II Break (4E)	1.4	08.92-10.96	55	KDX (TU3MC)
ROVER				
400 (RT)	420 Si Lux	12.95-03.00	100	20 T4H
400 Hatchback (RT)	420 Si Lux	12.95-03.00	100	20 T4H
400 Tourer (XW)	2.0 i	05.94-11.98	100	20 T4H
800 (XS)	820 I/SI	01.92-02.99	100	20 T4H
800 Hatchback (XS)	820 I/SI (XS)	01.93-02.99	100	20 T4H
Mini	1300	01.92-09.96	46	12 A2E/12 A2L

CL107

PIN

OEM-No.

FIAT 9607405480
9622889780
PSA 5970.48
5970.60
5970.70
96074054
96228897

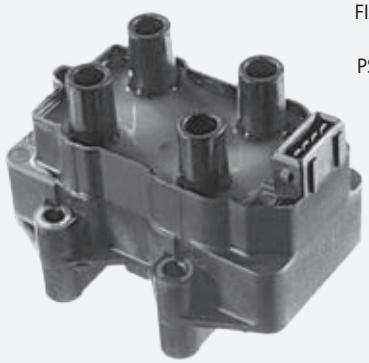

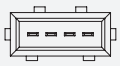

CITROEN				
Berlingo (MF)	1.1 i	07.96-	44	HDZ (TU1M)
	1.4 i	07.96-	55	KFX/KFW
	1.8 i	05.97-	66	LFX (XU7JB)
	1.8 i 4WD	04.97-	66	LFX (XU7JB)
Berlingo Van (M_)	1.1 i	07.96-	44	HDZ/HFX
	1.4 i	07.96-	55	KFX/KFW
	1.8 i	08.99-10.02	66	LFX (XU7JB)
BX (XB-_)	16 E	03.91-02.93	65	BDY/BDZ
BX Break (XB-_)	16	03.91-12.94	65	BDY/BDZ
	19	04.90-12.94	80	DDZ (XU9M)
	19 4x4	10.90-05.91	80	DDZ (XU9M)
Evasion (22, U6)	1.8	05.97-07.02	73	LFZ (XU7JP)
	2.0	06.94-07.02	89	RFU (XU10J2/C)
	2.0 Turbo C.T.	06.94-07.02	108	RGX (XU10J2TE)
Jumper Bus (230P)	2.0	02.94-04.02	80	RFW (XU10J2U)
	2.0 4x4	08.96-04.02	80	RFW (XU10J2U)

< CL107

CITROEN				
Jumper Bus (244, Z_)	2.0	04.02-	81	XU10J2
	2.0 Bivalent	02.03-	81	XU10J2
Jumper Flatbed (230)	2.0	03.94-04.02	80	RFW (XU10J2U)
Jumper Van (230L)	2.0	03.94-04.02	80	RFW (XU10J2U)
	2.0 4x4	10.96-01.02	80	RFW (XU10J2U)
Jumper Van (244)	2.0	04.02-	81	XU10J2
	2.0 Bivalent	02.03-	81	XU10J2
Saxo (S0, S1)	1.0 X	05.96-11.98	33	CDZ (TU9M)
	1.0 X	05.98-06.03	37	CDZ (TU9M)
	1.1 X,SX	05.97-09.03	40	HDZ (TU1M)
	1.1 X,SX	05.96-08.00	44	HDZ (TU1M)
	1.4 VTS	05.96-01.98	55	KFX/KFW
	1.6	02.96-06.98	66	NFZ (TU5JP)
	1.6	02.01-04.04	74	NFT
	1.6	02.96-04.04	88	NFX (TU5JP4)
	1.6 VTL,VTR	05.96-05.98	65	NFZ (TU5JP)
	1.6 VTS	09.00-09.03	72	NFT
	1.6 VTS	06.96-09.03	87	NFX (TU5JP4)
Xantia (X1)	1.6 i	03.93-01.98	65	BFZ (XU5JP)
	1.8 i	04.97-01.98	66	LFX (XU7JB)
	1.8 i	03.93-01.98	74	LFZ (XU7JP)
	1.8 i 16V	06.95-01.98	81	LFY (XU7JP4)
	2.0 i	03.93-01.98	89	RFX (XU10J2C)
	2.0 i 16V	06.95-01.98	97	RFV (XU10J4R)
	2.0 i 16V	03.93-01.98	112	RFY (XU10J4/Z)
	2.0 i 16V	06.94-01.98	110	RFT (XU10J4/Z)
	2.0 Turbo	06.95-01.98	108	RGX (XU10J2TE)
Xantia (X2)	1.8 i	01.98-04.03	66	LFX (XU7JB)
	2.0 i	01.98-04.03	89	RFX (XU10J2C)
	2.0 Turbo	01.98-04.03	108	RGX (XU10J2TE)
Xantia Break (X1)	1.8 i	04.97-01.98	66	LFX (XU7JB)
	1.8 i	06.95-01.98	74	LFZ (XU7JP)
	1.8 i 16V	06.95-01.98	81	LFY (XU7JP4)
	2.0 i	06.95-01.98	89	RFX (XU10J2C)
	2.0 i 16V	06.95-01.98	97	RFV (XU10J4R)
	2.0 Turbo	06.95-01.98	108	RGX (XU10J2TE)
Xantia Break (X2)	1.8 i	01.98-04.03	66	LFX (XU7JB)
	2.0 i	01.98-04.03	89	RFX (XU10J2C)
	2.0 Turbo	01.98-04.03	108	RGX (XU10J2TE)
XM (Y3)	2.0 i	05.89-06.94	89	RFZ (XU10J2)
	2.0 i Turbo	09.92-06.94	104	RGY (XU10J2TE/Z)
XM (Y4)	2.0 i 16V	05.94-10.00	97	RFV (XU10J4R)
	2.0 Turbo	05.94-10.00	108	RGX (XU10J2TE)
XM Break (Y3)	2.0 i	11.91-04.94	89	RFZ (XU10J2)
	2.0 Turbo	09.92-04.94	104	RGY (XU10J2TE/Z)
XM Break (Y4)	2.0 i 16V	05.94-10.00	97	RFV (XU10J4R)
	2.0 Turbo	05.94-10.00	108	RGX/RGY
Xsara (N1)	1.4 i	04.97-03.05	55	KFX (TU3JP)
	1.6 i	04.97-09.00	65	NFZ (TU5JP)
	1.8 i	04.97-09.00	66	LFX (XU7JB)
	1.8 i 16V	04.97-09.00	81	LFY (XU7JP4)
	1.8 i Aut.	04.97-09.00	74	LFZ (XU7JP)
	2.0 16V	07.98-09.00	97	RFV (XU10J4R)
Xsara Break (N2)	1.4 i	10.97-08.05	55	KFX (TU3JP)
	1.6 i	10.97-09.00	65	NFZ (TU5JP)
	1.8 i	10.97-09.00	66	LFX (XU7JB)
	1.8 i 16V	10.97-09.00	81	LFY (XU7JP4)
	1.8 i Aut.	10.97-09.00	74	LFZ (XU7JP)
	2.0 16V	07.98-09.00	97	RFV (XU10J4R)
Xsara Coupe (N0)	1.4 i	03.98-03.05	55	KFX (TU3JP)
	1.6 i	02.98-09.00	65	NFZ (TU5JP)
	1.8 i	02.98-09.00	66	LFX (XU7JB)
	1.8 i	02.98-09.00	74	LFZ (XU7JP)
	1.8 i 16V	02.98-09.00	81	LFY (XU7JP4)
Xsara Picasso (N68)	1.6	12.99-	65	NFZ (TU5JP)
ZX (N2)	1.6	07.94-10.97	66	
	1.6 i	03.91-06.97	65	BFZ/BDY
	1.8	07.94-10.97	76	LFZ (XU7JP)
	1.8 i	07.92-06.97	74	LFZ (XU7JP)
	1.8 i 16V	01.96-06.97	81	LFY (XU7JP4)
	1.9	03.91-06.97	93	D6E (XU9JA)

< CL107

CITROEN				
ZX (N2)	1.9	03.91-09.93	96	
	1.9 i	03.91-06.97	88	DKZ (XU9JA)
	2.0	07.94-10.97	90	RFX (XU10J2C)
	2.0 i	07.92-06.97	89	RFX (XU10J2C)
	2.0 i 16V	06.94-06.97	110	RFT (XU10J4/Z)
	2.0 i 16V	07.92-10.94	112	RFT/RFY
ZX Break (N2)	1.6 i	10.93-10.97	65	BFZ/BDY
	1.8 i	10.93-10.97	74	LFZ (XU7JP)
	1.8 i 16V	01.96-02.98	81	LFY (XU7JP4)
FIAT				
Ducato Bus (230)	2.0 4x4	11.94-11.01	80	RFW
	2.0 Panorama	03.94-04.02	80	RFW
Ducato Bus (244, Z_)	2.0	04.02-	81	RFL
	2.0 Bipower	11.02-	81	RFL
Ducato Flatbed (230)	2.0	06.98-04.02	80	RFW
Ducato Van (230L)	2.0	03.94-04.02	80	RFW
Ducato Van (244)	2.0	04.02-	81	RFL
	2.0 Bipower	11.02-	81	RFL
Ulysse (220)	1.8	05.97-08.02	73	LFW
	2.0	06.94-08.02	89	RFU (XU10J2C)
	2.0 Turbo	06.94-08.02	108	RGX (XU10J2CTE)
LANCIA				
Zeta (220)	2.0 16V	07.00-09.02	100	RFN
	2.0 Turbo	05.95-09.02	108	RGX (XU10J2TE)
PEUGEOT				
106 II (1)	1.0 i	05.96-	33	CDY (TU9M)
	1.0 i	01.97-	37	CDZ (TU9M)
	1.1 i	01.97-06.00	40	HDY (TU1M)
	1.1 i	05.96-	44	HDZ (TU1M)
	1.4 i	05.96-06.97	55	KFX/KFW
205 I Cabriolet	1.6 CJ	08.92-12.94	65	BDY (XU5M3Z)
205 II (20A/C)	1.6 Aut.	05.90-09.98	65	BDY
206 CC (2A/C)	1.1 i	09.98-	44	HFZ/HFX
306 (7B, N3, N5)	1.8 16V	03.97-05.01	81	LFY (XU7JP4)
	1.8 ST	06.94-05.01	74	LFZ (XU7JP)
	2.0	03.97-05.01	97	RFV (XU10J4R)
	2.0 ST	07.94-05.01	89	RFX (XU10J2)
306 Break	1.4	03.97-05.98	55	KFX/KFW
	1.8	03.97-04.02	74	LFZ (XU7JP)
	1.8 16V	03.97-04.02	81	LFY (XU7JP4)
	2.0	03.97-04.02	97	RFV (XU10J4R)
306 Cabriolet	1.8	03.94-04.02	74	LFZ (XU7JP)
	1.8 16V	07.00-04.02	81	LFY (XU7JP4)
	2.0	03.94-04.02	89	RFX (XU10J2)
	2.0 16V	03.97-04.02	97	RFV (XU10J4R)
306 CC (7_, N_)	1.8	05.93-05.01	74	LFZ (XU7JP)
	1.8 16V	03.97-05.01	81	LFY (XU7JP4)
	2.0 16V	03.97-05.01	97	RFV (XU10J4R)
	2.0 XSi	05.93-05.01	89	RFX (XU10J2)
309 II (3C, 3A)	1.6	07.89-12.93	65	BDY/BDZ
405 I (15B)	1.6	09.90-12.92	65	BDY/BDZ
405 I Break (15E)	1.6	10.90-08.92	65	BDY/BDZ
405 II (4B)	1.6	08.92-10.95	65	BFZ/BDZ/BDY
	1.8	08.92-10.95	74	LFZ (XU7JP)
	2.0	08.92-10.95	89	RFX (XU10J2)
	2.0 X4	08.92-10.95	89	RFX (XU10J2)
405 II Break (4E)	1.6	08.92-10.96	65	BFZ/BDZ/BDY
	1.8	08.92-10.96	74	LFZ (XU7JP)
	2.0	08.92-10.96	89	RFX (XU10J2)
	2.0 4x4	08.92-10.96	89	RFX (XU10J2)
406 (8B)	1.6	11.95-05.04	65	BFZ (XU5JP)
	1.8	05.97-05.04	66	LFX (XU7JB)
	1.8 16V	11.95-03.99	81	LFY (XU7JP4)
	2.0 16V	11.95-05.04	97	RFV (XU10J4R)
	2.0 Turbo	04.96-05.04	108	RGX (XU10J2TE)
406 Break (8E/F)	1.8	05.97-10.04	66	LFX (XU7JB)
	1.8 16V	10.96-03.99	81	LFY (XU7JP4)
	2.0 16V	10.96-03.97	97	RFV (XU10J4R)
	2.0 Turbo	10.96-10.04	108	RGX (XU10J2TE)
406 Coupe (8C)	2.0 16V	03.97-12.04	97	RFV (XU10J4R)
605 (6B)	2.0	10.90-09.99	89	RFZ (XU10J2Z)

CL107 ▶

< CL107

PEUGEOT

605 (6B)	2.0 Turbo	07.92-09.99	104	RGY (XU10J2TE)
	2.0 Turbo	07.91-09.99	108	RGX (XU10J2TE)
806 (221)	1.8	07.95-08.02	73	LFW (XU7JP)
	2.0	06.94-08.02	89	RFU (XU10J2)
	2.0 16V	05.98-09.00	97	RFV (XU10J4R)
	2.0 Turbo	06.94-08.02	108	RGX (XU10J2TE)
Boxer Bus (230P)	2.0 i	03.94-04.02	80	RFW (XU10J2)
	2.0 i 4x4	08.96-04.02	80	RFW (XU10J2)
Boxer Bus (244, Z_)	2.0	04.02-	81	RFL (XU10J2U)
Boxer Flatbed (ZCT_)	2.0	12.01-04.02	81	RFL (XU10J2U)
	2.0 i	06.94-04.02	80	RFW (XU10J2)
Boxer Van (230L)	2.0 4x4	03.96-09.98	80	
	2.0 i	06.94-04.02	80	RFW (XU10J2)
Boxer Van (244)	2.0	04.02-	81	RFL (XU10J2U)
Expert (224)	1.8	10.96-09.00	74	LFZ (XU7JP)
Expert Van (222)	1.8	10.96-09.00	74	LFZ (XU7JP)
Partner Combispace	1.1	06.96-	44	HDZ/HFX
	1.4	06.96-11.02	55	KFX (TU3JP)
	1.8	05.97-	66	LFX (XU7JB)
Partner Van (5)	1.1	06.96-	44	HDZ (TU1M)
	1.4	06.96-	55	KFX (TU3JP)/TU32

CL108

SAE

OEM-No.
PSA 5970.43
96 010 513
97 530 780

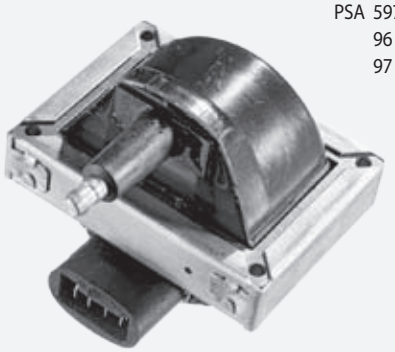

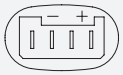

CITROEN

AX (ZA-_)	10	09.86-06.92	32	C1A
	10	07.86-12.90	33	CDY (TU9M)
	10 E	12.86-12.88	30	C3A
	11	12.86-04.94	40	H1A/H1B
	11 4x4	06.91-07.92	40	H1A
	11 cat	09.88-12.89	40	HAZ (TU1CP)
	14	12.86-12.88	44	KAY (TU3CP)
	14	06.88-12.89	49	K1F
	14	04.87-01.93	55	KDY/KDZ/KDX
	14	01.88-12.92	62	K2B/K2A
	14 4x4	08.91-01.93	55	KDY/KDZ/KDX
	1.3 Sport	04.87-12.88	70	M4A
BX (XB-_)	11	10.88-06.92	40	HDZ (TU1M)
	14	01.89-02.93	55	KDZ/KDY
	16	03.86-02.93	76	180Z
BX Break (XB-_)	14	01.86-02.93	53	150C
	14	01.89-02.93	55	KDY (TU3M)
	16	03.86-12.94	76	180Z
C15 (VD-_)	1.0	10.84-12.97	33	XV8/TU9
	1.0 E	11.92-07.96	37	TU9K
	1.1	11.88-07.96	40	H1A
	1.1 i	07.88-12.96	44	HDZ (TU1M)
	1.4	07.87-12.96	49	K1H (TU3A)
	1.4 E	07.87-12.96	40	K3A
	1.4 E	05.87-12.96	44	150D (XY7)
	1.4 i	05.91-12.96	55	KDY (TU3_)
C15 Combi	1.1	10.88-10.92	40	HDZ (TU1M)
	1.1	08.88-07.96	44	HDZ (TU1M)
	1.4	05.87-09.92	49	
	1.4	05.87-10.92	44	150D (XY7)
	1.4	05.91-07.96	55	KDY (TU3M)

< CL108

PEUGEOT

205 I Cabriolet	1.1 CJ	10.89-12.94	44	HDZ (TU1M)
	1.4	08.87-06.94	62	K2B (TU3S)
	1.4 CJ	03.89-12.94	49	K1D (TU3A)
	1.4 CJ	05.91-12.94	55	KDZ/KDY
	1.4 CJ cat	01.89-09.93	44	KAY (TU3CP)
	1.9 CTI	01.91-10.94	75	DFZ (XU9J1)
205 II (20A/C)	1.0	10.87-09.98	33	TU9
	1.1	10.87-10.90	40	H1B (TU1)
	1.1	07.89-09.98	44	HDZ (TU1M)
	1.4	10.87-10.90	49	K1D (TU3A)
	1.4	07.88-09.98	55	KFX/KDZ/KDY
	1.4	06.87-12.89	62	K2B (TU3S)
	1.4 cat	08.87-09.93	44	KAY (TU3CP)
	1.9 GTI	01.91-10.94	88	DKZ (XU9JAZ)
	1.9 GTI	01.91-09.98	94	D6B (XU9JA)
309 I (10C, 10A)	1.4	03.89-07.89	49	K1D (TU3A)
	1.4	03.89-07.89	55	KDZ/KDY
	1.4	03.89-07.89	62	K2B (TU3S)
	1.6	11.85-09.88	76	180Z/B6B
309 II (3C, 3A)	1.1	08.90-12.93	44	HDZ (TU1M)
	1.4	07.90-12.93	49	K1D (TU3A)
	1.4	07.89-12.93	55	KDZ/KDY
	1.9	01.91-12.93	72	DFZ (XU9J1)
	1.9 GTI	12.89-12.93	88	DKZ (XU9JAZ)
405 I (15B)	1.4	01.87-07.92	47	K5A (TU3)

CL109

SAE

OEM-No.
PSA 5970.45
96035284
9603528480

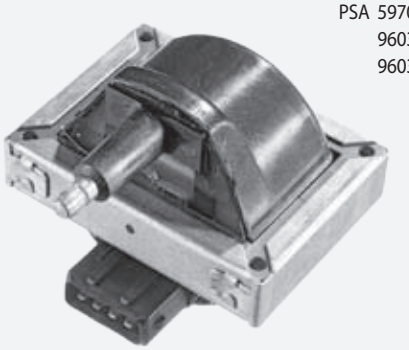

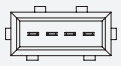

CITROEN

AX (ZA-_)	10	01.91-12.91	33	CDY (TU9M)
	11	09.86-04.92	44	HDZ (TU1M)/H1B
ZX (N2)	1.1	03.91-08.93	40	H1A/H1B
	1.1	03.91-06.97	44	HDZ (TU1M)
	1.4	03.91-06.97	55	KDZ (TU3M/Z)
	1.4 i	03.91-06.97	55	KDZ/KFX/KDX
	1.9 i	03.91-06.97	88	DKZ (XU9JA)
ZX Break (N2)	1.4 i	10.93-10.97	55	KFX/KDX/KDY

PEUGEOT

106 I (1A, 1C)	1.0	09.91-04.96	33	TU9/CDY (TU9M)
	1.1	09.91-04.96	44	HDZ (TU1M)
	1.4	08.91-03.96	51	K5A (TU3)
	1.4	09.91-02.94	55	KDY (TU3M)
605 (6B)	2.0	06.89-09.90	89	RFZ (XU10J2Z)

CL110

OEM-No.
PSA 5970.72
5970.74
5970.A9
96246755
9624675580
96 281 585
96 281 585 80

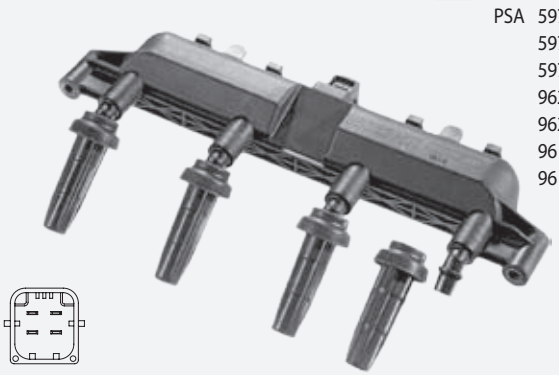

CITROEN				
Berlingo (MF)	1.4 i	09.05-	55	KFX/KFW
Berlingo Van (M_)	1.4 i	09.05-	55	KFX/KFW
Saxo (S0, S1)	1.4 VTS	02.98-05.00	55	KFX/KFW
	1.6 VTL,VTR	06.98-06.03	65	NFZ (TU5JP)
Xsara (N1)	1.4 i	04.97-03.05	55	KFX (TU3JP)
	1.6 i	04.97-09.00	65	NFZ (TU5JP)
Xsara Break (N2)	1.4 i	10.97-08.05	55	KFX (TU3JP)
	1.6 i	10.97-09.00	65	NFZ (TU5JP)
Xsara Coupe (N0)	1.4 i	03.98-03.05	55	KFX/KFW
PEUGEOT				
106 II (1)	1.4 i	06.97-06.00	55	KFX/KFW
206 CC (2A/C)	1.1	08.98-07.00	40	
	1.4 i	09.98-02.00	55	KFX/KFW
	1.6 i	09.98-12.00	65	NFZ (TU5JP)
306 (7B, N3, N5)	1.4 SL	06.97-05.00	55	KDX/KFX/KFW
	1.6 SR	07.98-10.00	65	NFZ (TU5JP)
306 Break	1.4	06.98-06.00	55	KFX/KFW
	1.6	07.98-10.00	65	NFZ (TU5JP)
Partner Combispace	1.4	06.96-08.02	55	KFX (TU3JP)

CL111

OEM-No.
PSA 5963.19
5970.78
5970.79
5970.A8
96 358 648
96 358 649

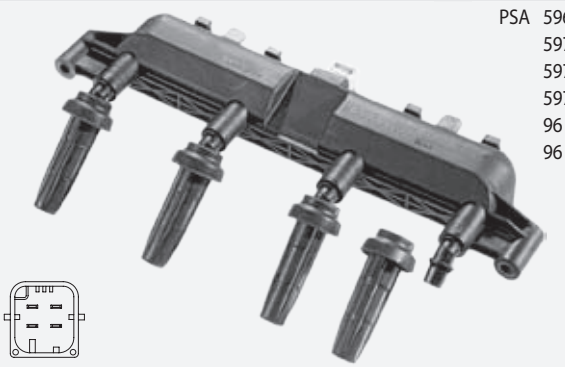

CITROEN				
Berlingo (MF)	1.4 i	09.00-	55	KFX/KFW
Berlingo Van (M_)	1.4 i	09.00-	55	KFX/KFW
C2 (JM_)	1.1	09.03-	44	HFX (TU1JP)
	1.4	09.03-	54	KFV (TU3JP)
C3 I (FC_)	1.1 i	02.02-	44	HFX (TU1_)
	1.4 16V	12.03-	65	KFU (ET3J4)
	1.4 i Bivalent	02.02-	54	KFV (TU3JP)
C3 Pluriel (HB_)	1.4	05.03-	54	KFV (TU3JP)
Saxo (S0, S1)	1.1 X,SX	05.96-09.03	40	HDZ (TU1M)
	1.1 X,SX	09.00-09.03	44	HFX (TU1JP)
	1.4 VTS	06.00-06.03	55	KFX/KFW
	1.6	06.98-06.03	66	NFZ (TU5JP)
	1.6	02.01-04.04	74	NFT
	1.6 VTS	09.00-09.03	72	NFT
	1.6 VTS	06.96-09.03	87	NFX (TU5JP4)
Xsara (N1)	1.4 i	04.97-03.05	55	KFX (TU3JP)
Xsara Break (N2)	1.4 i	10.97-08.05	55	KFX (TU3JP)
Xsara Coupe (N0)	1.4 i	03.98-03.05	55	KFX/KFW

< CL111

PEUGEOT				
106 II (1)	1.1 i	06.00-	40	HDY (TU1M)
	1.1 i	05.96-	44	HFX (TU1JP)
	1.4 i	06.00-	55	KFX/KFW
1007 (KM_)	1.4	04.05-	54	KFV (TU3JP)
206 CC (2A/C)	1.1 i	09.98-	44	HFZ/HFX
	1.4 i	03.00-02.09	55	KFX/KFW
206 SW (2E/K)	1.1	07.02-	44	HFX (TU1JP)
	1.4	07.02-	55	KFV/KFW
	1.4 16V	10.03-	65	KFU (ET3J4)
306 (7B, N3, N5)	1.4 SL	06.00-05.01	55	KDX/KFX/KFW
	1.6	10.00-05.01	72	NFT
306 Break	1.4	03.97-04.02	55	KFX/KFW
	1.6	10.00-04.02	72	NFT
306 Cabriolet	1.6	10.00-04.02	72	NFT
306 CC (7_, N_)	1.4	06.97-05.01	55	KDX/KFX/KFW
	1.6	10.00-05.01	72	NFT
307 (3A/C)	1.4	08.00-	55	KFW (TU3JP)
307 Break (3E)	1.4 16V	11.03-	65	KFU (ET3J4)
307 SW (3H)	1.4 16V	11.03-	65	KFU (ET3J4)
Partner Combispace	1.4	09.00-	55	KFX/KFW
Partner Van (5)	1.4 BiFuel	04.03-	55	KFW (TU3JP)

CL112

OEM-No.
PSA 5970.75
5970.98
94 632 641
96 341 314
9634131480

CITROEN				
C4 Coupe (LA_)	2.0 16V	11.04-07.07	100	RFN (EW10J4)
C4 I (LC_)	2.0 16V	11.04-07.07	100	RFN (EW10J4)
C5 I (DC_)	1.8 16V	03.01-08.04	85	6FZ (EW7J4)
	2.0 16V	03.01-08.04	100	RFN (EW10J4)
C5 I Break (DE_)	1.8 16V	06.01-08.04	85	6FZ (EW7J4)
	2.0 16V	06.01-08.04	100	RFN (EW10J4)
C5 II (RC_)	1.8 16V	09.04-	85	6FZ (EW7J4)
C5 II Break (RE_)	1.8 16V	09.04-	85	6FZ (EW7J4)
C8 (EA_, EB_)	2.0	07.02-	100	RFN (EW10J4)
Evasion (22, U6)	2.0 16V	05.00-07.02	100	RFN (EW10J4)
Jumpy (U6U)	2.0	04.00-12.06	100	RFN (EW10J4)
	2.0 i 16V	03.00-	102	
Jumpy Van	2.0 i 16V	03.00-	102	RFN (EW10J4)
Xsara (N1)	2.0 16V	09.00-03.05	100	RFN (EW10J4)
Xsara Break (N2)	2.0 16V	09.00-08.05	100	RFN (EW10J4)
Xsara Coupe (N0)	2.0 16V	09.00-03.05	100	RFN (EW10J4)
Xsara Picasso (N68)	1.8 16V	02.00-	85	6FZ (EW7J4)
	2.0 16V	01.03-	100	RFN (EW10J4)
FIAT				
Scudo Combinato	2.0 16V	06.00-12.06	100	RFN (EW10J4)
Scudo Van (220L)	2.0	05.00-12.06	100	RFN (EW10J4)
Ulysse (179AX)	2.0	08.02-06.11	100	RFN (EW10J4)
Ulysse (220)	2.0 16V	09.00-08.02	100	RFN (EW10J4)
PEUGEOT				
206 CC (2A/C)	2.0 RC	07.03-	130	RFK (EW10J4S)
	2.0 S16	04.99-10.00	99	RFR (DEW10J4)
	2.0 S16	06.99-	100	RFN (EW10J4)
206 CC (2D)	2.0 S16	09.00-	100	RFN (EW10J4)
206 SW (2E/K)	2.0 16V	07.02-	100	RFN (EW10J4)
307 (3A/C)	2.0 16V	08.00-	100	RFN (EW10J4)
307 Break (3E)	2.0	03.02-	100	RFN (EW10J4)
307 CC (3B)	2.0 16V	10.03-	100	RFN (EW10J4)

CL112 ▶

< CL112

PEUGEOT				
307 SW (3H)	2.0 16V	03.02-	100	RFN (EW10J4)
406 (8B)	1.8 16V	10.00-05.04	85	6FZ (EW7J4)
	2.0 16V	01.99-08.00	99	RFR (DEW10J4)
	2.0 16V	08.00-06.04	100	RFN (EW10J4)
406 Break (8E/F)	1.8 16V	10.00-10.04	85	6FZ (EW7J4)
	2.0 16V	01.99-10.00	99	RFR (DEW10J4)
	2.0 16V	10.00-10.04	100	RFN (EW10J4)
406 Coupe (8C)	2.0 16V	01.99-10.00	99	RFR (DEW10J4)
	2.0 16V	10.00-12.04	100	RFN (EW10J4)
407 (6D_)	1.8	05.04-	85	6FZ (EW7J4)
	2.0	05.04-	100	RFN (EW10J4)
407 SW (6E_)	1.8	05.04-	85	6FZ (EW7J4)
	2.0	05.04-	100	RFN (EW10J4)
607 (9D, 9U)	2.0	02.00-	100	RFN (EW10J4)
806 (221)	2.0 16V	09.00-08.02	100	RFN (EW10J4)
807 (E)	2.0	06.02-	100	RFN (EW10J4)
Expert (224)	2.0	07.00-	100	RFN (EW10J4)
Expert Van (222)	2.0	09.02-	100	RFN (EW10J4)

CL113

OEM-No.

top cover
PSA 5963.18
5970.51
96211048

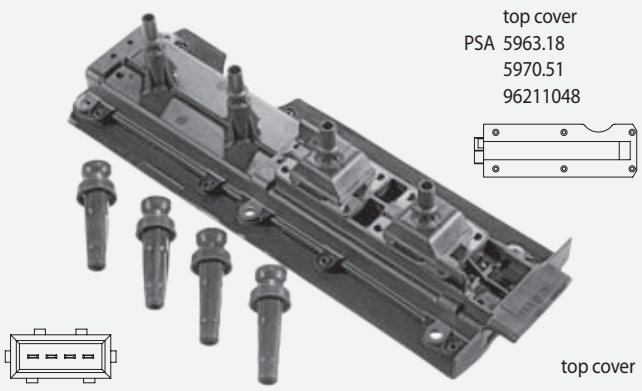

top cover

CITROEN				
Xantia (X1)	2.0 i 16V	06.95-09.97	97	RFV (XU10J4R)
Xantia Break (X1)	2.0 i 16V	06.95-09.97	97	RFV (XU10J4R)
XM (Y4)	2.0 i 16V	07.94-10.00	97	RFV (XU10J4R)
XM Break (Y4)	2.0 i 16V	07.94-10.00	97	RFV (XU10J4R)
PEUGEOT				
306 (7B, N3, N5)	2.0	03.97-09.97	97	RFV (XU10J4R)
306 Cabriolet	2.0 16V	03.97-09.97	97	RFV (XU10J4R)
306 CC (7_, N_)	2.0 16V	03.97-09.97	97	RFV (XU10J4R)
406 (8B)	2.0 16V	11.95-09.97	97	RFV (XU10J4R)
406 Break (8E/F)	2.0 16V	11.96-11.97	97	RFV (XU10J4R)
406 Coupe (8C)	2.0 16V	05.97-09.97	97	RFV (XU10J4R)
605 (6B)	2.0 16V	07.94-05.99	97	RFV (XU10J4R)

CL114

SAE

OEM-No.

PSA 5970.42
97 531 206

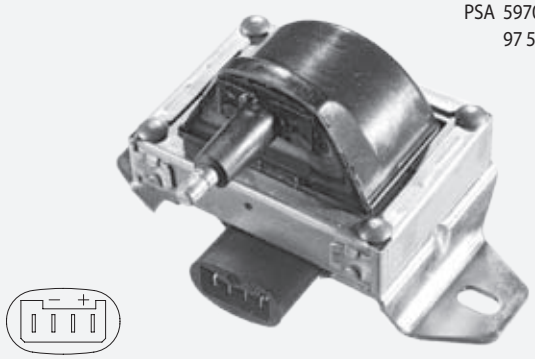

CITROEN				
BX (XB-_)	15	10.87-05.92	59	B1E (XU51C)
	16	01.87-02.93	53	B1E (XU51C)
	16	09.89-02.93	55	BAZ/BAY (XU5CP)
	16	07.85-02.93	64	171D

< CL114

CITROEN				
BX (XB-_)	16 E	09.89-03.91	65	BDY/BDZ (XU5M)
	19	09.86-11.89	70	D2C (XU92C)
	19	07.86-05.89	75	159A
	19 E	06.88-02.93	80	DDZ (XU9M)
	19 E 4x4	04.89-02.93	80	D2F
	19 GTi	06.88-02.93	88	DKZ (XU9JA)
	19 GTi	07.86-02.93	90	D6A (XU9J2)
	19 GTi 16V	03.88-02.93	108	DFW (XU9J4)
	19 GTi 16V	09.87-12.88	116	D6C (XU9J4)
	19 GTi 4x4	06.88-02.93	88	DKZ (XU9JA)
BX Break (XB-_)	15	04.88-05.92	59	B1E (XU51C)
	16	09.88-12.94	53	B1E (XU51C)
	16	07.85-12.94	64	171D
	16	05.89-03.91	65	BDY/BDZ (XU5M)
	19	12.87-12.89	70	D2C (XU92C)
	19	06.88-04.90	80	DDZ (XU9M)
	19	06.88-12.94	88	DKZ (XU9JA)
C15 (VD-_)	1.3	07.87-05.88	47	G1A
PEUGEOT				
205 II (20A/C)	1.6	10.87-09.98	53	B1E (XU51C)
	1.6	01.90-09.98	55	B1A (XU51C)
309 I (10C, 10A)	1.6	01.86-07.89	69	
309 II (3C, 3A)	1.1	08.90-12.93	44	HDZ (TU1M)
	1.6	07.89-12.93	65	BDY/BDZ/BDY
	1.6	07.89-12.93	68	B2A (XU52C/K)
	1.6	07.89-12.93	69	B2A (XU52C/K)
	1.9 GTI 16V	10.90-12.93	108	DFW (XU9J4Z)
	1.9 GTI 16V	08.89-07.90	116	D6C (XU9J4)
405 I (15B)	1.6	07.87-12.92	53	B1E (XU51C)
	1.6	07.87-06.88	55	B1E/BAZ
	1.6	07.87-09.90	65	BDY/BDZ
	1.6	10.89-12.92	66	BDZ (XU5M)
	1.6	01.87-12.92	69	B2A (XU52C/K)
	1.6 4x4	04.88-07.92	65	BDZ (XU5M)
	1.9	07.87-12.92	70	D2C (XU92C)
	1.9	07.88-12.92	88	DKZ (XU9JAZ)
	1.9 Sport MI-16	04.88-12.92	108	DFW (XU9J4Z)
	1.9 Sport 4x4	04.88-12.92	108	DFW (XU9J4Z)
	1.9 Sport MI-16	07.87-11.91	116	D6C (XU9J4)
405 I Break (15E)	1.6	10.88-08.92	55	BAZ (XU5CP)
	1.6	10.88-09.90	65	BDY/BDZ
	1.6	10.88-08.92	66	BDZ (XU5M)
	1.6 SRi 4x4	04.88-07.92	65	BDZ (XU5M)
	1.9	10.88-08.92	70	D2C (XU92C)
	1.9	10.88-08.92	88	DKZ (XU9JAZ)

CL115

OEM-No.

PSA 5970.73
5970.A4
96 292 106

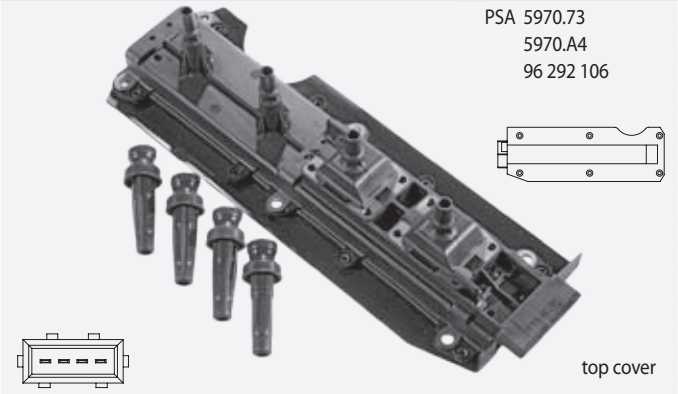

top cover

CITROEN				
Evasion (22, U6)	2.0 16V	05.98-04.00	97	RFV (XU10J4R)
Xantia (X1)	1.8 i 16V	08.97-01.98	81	LFY (XU7JP4)
	2.0 i 16V	09.97-01.98	97	RFV (XU10J4R)
Xantia (X2)	1.8 i 16V	01.98-04.03	81	LFY (XU7JP4)
	2.0 i 16V	01.98-04.03	97	RFV (XU10J4R)
Xantia Break (X1)	1.8 i 16V	07.97-01.98	81	LFY (XU7JP4)
	2.0 i 16V	09.97-01.98	97	RFV (XU10J4R)

< CL115

CITROEN				
Xantia Break (X2)	1.8 i 16V	01.98-04.03	81	LFY (XU7JP4)
	2.0 i 16V	01.98-04.03	97	RFV (XU10J4R)
XM (Y4)	2.0 i 16V	09.97-10.00	97	RFV (XU10J4R)
XM Break (Y4)	2.0 i 16V	09.97-10.00	97	RFV (XU10J4R)
Xsara (N1)	1.8 i 16V	04.97-09.00	81	LFY (XU7JP4)
	2.0 16V	07.98-09.00	97	RFV (XU10J4R)
Xsara Break (N2)	1.8 i 16V	10.97-09.00	81	LFY (XU7JP4)
	2.0 16V	07.98-09.00	97	RFV (XU10J4R)
Xsara Coupe (N0)	1.8 i 16V	02.98-09.00	81	LFY (XU7JP4)
PEUGEOT				
306 (7B, N3, N5)	1.8 16V	09.97-05.01	81	LFY (XU7JP4)
	2.0	09.97-05.01	97	RFV (XU10J4R)
306 Break	1.8 16V	09.97-04.02	81	LFY (XU7JP4)
	2.0	03.97-04.02	97	RFV (XU10J4R)
306 Cabriolet	1.8 16V	07.00-04.02	81	LFY (XU7JP4)
	2.0 16V	09.97-04.02	97	RFV (XU10J4R)
306 CC (7_, N_)	1.8 16V	09.97-05.01	81	LFY (XU7JP4)
	2.0 16V	09.97-05.01	97	RFV (XU10J4R)
406 (8B)	1.8 16V	09.97-10.00	81	LFY (XU7JP4)
	2.0 16V	09.97-05.04	97	RFV (XU10J4R)
406 Break (8E/F)	1.8 16V	09.97-10.00	81	LFY (XU7JP4)
	2.0 16V	09.97-04.04	97	RFV (XU10J4R)
406 Coupe (8C)	2.0 16V	05.97-04.99	97	RFV (XU10J4R)
605 (6B)	2.0 16V	09.97-09.99	97	RFV (XU10J4R)
806 (221)	2.0 16V	05.98-09.00	97	RFV (XU10J4R)

CL116

PIN

OEM-No.
DACIA 60 01 543 604
NISSAN 22448-00QAC
RENAULT 77 00 274 008

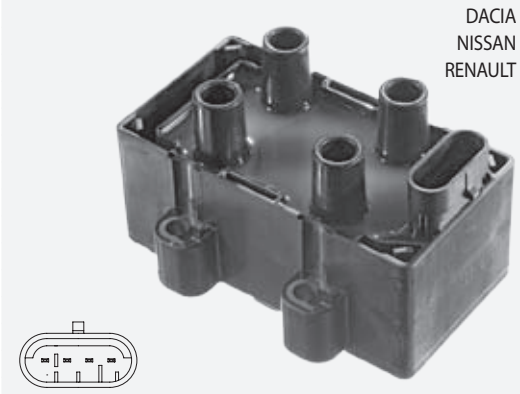

DACIA				
Dokker	1.6	11.12-	61	K7M 812/K7M 828
	1.6 LPG	11.13-	61	K7M 812/K7M 828
Dokker Express	1.6 16V	12.12-	61	K7M 812/K7M 828
	1.6 LPG	11.13-	61	K7M 812/K7M 828
Lodgy	1.6	03.12-	61	K7M 812/K7M 828
	1.6 LPG	11.13-	61	K7M 812/K7M 828
Logan (LS_)	1.4	09.04-	55	K7J 710
	1.4 MPI LPG	02.06-	55	K7J 714/K7J 710
	1.6	09.04-	64	K7M 710
	1.6 BiFuel	05.10-	62	K7M 718
	1.6 MPI 85	05.10-	62	K7M 800
Logan Express (FS_)	1.4	03.09-	55	K7J 710
	1.6	03.09-	64	K7M 710
	1.6 MPI 85	05.10-	62	K7M 800
Logan MCV (KS_)	1.4	02.07-	55	K7J 710
	1.6	02.07-	64	K7M 710
	1.6 BiFuel	11.08-	64	K7M 710
	1.6 MPI 85	05.10-	62	K7M 800
Logan Pick-up (US_)	1.4	01.09-	55	K7J 710
	1.6	03.08-	64	K7M 710
	1.6 BiFuel	05.10-	62	K7M 800
	1.6 MPI 85	05.10-	62	K7M 800
Sandero	1.4	06.08-	55	K7J 710
	1.4 MPI LPG	01.09-	53	K7J 714
	1.6	06.08-	64	K7M 710
	1.6 MPI 85	05.10-	62	K7M 800
Sandero II	1.6	11.12-	61	K7M 812

< CL116

DACIA				
Solenza	1.4	02.03-	55	K7J 710
LADA (VAZ)				
Largus Combi	1.6	03.12-	62	VAZ-K7M
Largus Van	1.6	03.12-	62	VAZ-K7M
NISSAN				
Kubistar (X76)	1.2	08.03-10.09	44	D7F 764
	1.2 16V	04.06-10.09	55	D4F 712
Kubistar Van (X80)	1.2	08.03-	44	D7F 764
	1.2 16V	04.06-	55	D4F 712
RENAULT				
Clio II	1.2	10.99-	43	D7F 76_/D7F 72_
	1.2	03.99-05.01	44	D7F 722
	1.2	06.01-	55	
Clio II Van (SB0/1/2_)	1.2	03.99-10.03	44	D7F 72_/D7F 746
Clio III (BR0/1, CR0/1)	1.2 16V	09.10-	76	D4F 786
Kangoo (KC0/1_)	1.2	10.99-	43	D7F 710/D7F 72_
Kangoo Express (FC)	1.2	10.99-	43	D7F 710/D7F 72_
	1.2	07.98-07.01	44	D7F 766/D7F 764
Logan I (LS_)	1.4	09.04-	55	K7J 710
	1.6	09.04-	64	K7M 710
Logan I Combi (KS_)	1.4	10.07-	55	K7J 710
	1.6	04.07-	64	K7M 710
Megane I (BA)	1.4 e	02.99-08.03	55	E7J 626
	1.6 e	03.97-03.99	66	K7M 702/_703/_790
	1.6 i	03.97-03.99	55	K7M 720
Megane I Cabriolet	1.6 e	04.97-03.99	66	K7M 702/K7M 703
	2.0 16V IDE	11.99-08.03	103	F5R 740
Megane I Classic (LA)	1.4	02.99-08.03	55	E7J 626
	1.6 e	04.97-03.99	66	K7M 702/_703/_790
	1.6 i	03.97-03.99	55	K7M 720
Megane I Coach (DA)	1.6 e	03.97-03.99	66	K7M 702/K7M 703
	2.0 16V IDE	11.99-08.03	103	F5R 740
Megane I Grandtour	1.4 e	03.99-08.03	55	E7J 626
	1.6 e	03.99-08.03	66	K7M 702/K7M 703
Megane Scenic (JA)	1.6 e	04.97-10.99	66	K7M 702/K7M 703
	1.6 i	04.97-09.99	55	K7M 720
Modus / Grand Modus	1.2	04.11-	76	D4F 786
	1.2 16V	05.07-	74	D4F 784
Sandero/Stepway I	1.4	02.09-	55	K7J 710
	1.6	11.10-	62	K7M 718
	1.6	02.09-	64	K7M 710
	1.6	12.07-	75	K7M 710
Thalia I (LB0/1/2_)	1.4	08.00-	55	K7J 700
Thalia II (LU1/2_)	1.4	09.08-06.14	55	K7J 700
Twingo I (C06_)	1.2	11.98-	40	D7F 700/D7F 701
	1.2	11.98-06.07	43	D7F 70_
Twingo II (CN0_)	1.2	03.07-	43	D7F 800
	1.2 Turbo	03.07-	74	D4F 780/D4F 782

CL117

OEM-No.
DACIA 60 00 592 931
60 01 544 755

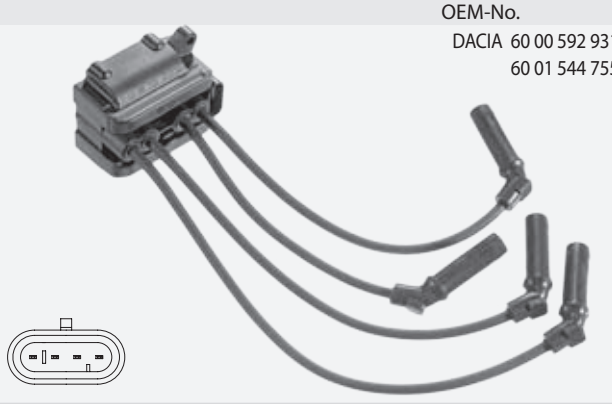

DACIA				
Logan (LS_)	1.4	09.04-	55	K7J 710

CL118

SAE

OEM-No.
RENAULT 7701031135
VOLVO 3287677
32876773

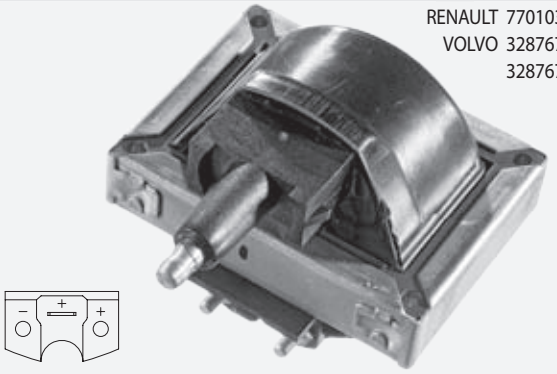

RENAULT

9 (L42_)	1.4	09.85-12.88	49	C2J 76_/C2J 720
	1.7	10.86-12.88	54	F3N 718
	1.7	10.86-12.88	55	F2N 730
	1.7	09.84-12.89	59	F2N 704/F2N 700
	1.7	10.86-12.88	65	F2N 798/_710/_708
	1.7	06.87-12.88	69	F3N 708
11 (B/C37_)	1.4	03.83-12.88	44	C1J 715/C2J 730
	1.4	05.83-12.85	53	C2J 717/C2J 755
	1.4 Turbo	04.84-12.86	77	C1J 764/C1J 760
	1.4 Turbo	10.86-12.88	85	C1J 770/C1J 782
	1.7	10.86-12.88	54	F2N 730
	1.7	10.84-12.88	55	F3N 718
	1.7	10.83-12.87	59	F2N 704/F2N 700
	1.7	06.87-12.88	64	F2N 732/F2N 742
	1.7	10.86-12.88	65	F2N 798/_710/_708
18 (134_)	2.2 i	06.84-07.86	76	J7T 718
19 I (B/C53_)	1.4	01.88-12.92	59	E6J 701
	1.4 cat	01.89-04.92	43	C3J 710
	1.4	01.89-12.89	43	C2J 772
	1.7	09.88-04.92	54	F3N 741/F3N 740
	1.7	09.88-04.92	66	F3N 743/F3N 742
	1.8 16V	06.89-04.92	99	F7P 704
19 I Chamade (L53_)	1.4	07.88-04.92	43	C3J 710/C2J 772
	1.7	07.88-04.92	66	F3N 743/F3N 742
	1.7	08.88-12.92	79	F3N 746
	1.8 16V	10.89-04.92	99	F7P 704
19 II (B/C53_)	1.2	04.92-12.95	40	C1G 730
	1.4	04.92-12.95	43	C3J 710
	1.4	01.92-12.95	55	E7J 742
	1.4	01.92-12.95	59	E7J 706/E6J 700
	1.7	04.92-12.95	54	F3N 741/F3N 740
	1.7	04.92-12.95	66	F3N 743
	1.8	04.92-12.95	65	F3P 70_/F3P 760
	1.8	04.92-12.95	66	F3P 706/F3P 760
	1.8	04.92-05.94	81	F3P 700
	1.8 16V	04.92-12.95	99	F7P 704
19 II Cabriolet	1.7	04.92-09.93	66	F3N 743
	1.8	04.92-06.96	65	F3P 70_/F3P 760
	1.8	09.93-06.96	66	F3P 706/F3P 760
	1.8	07.94-06.96	79	F3P 765/_682/_764
	1.8 16V	04.92-06.96	99	F7P 704
19 II Chamade (L53_)	1.4	04.92-12.95	43	C3J 710
	1.4	11.93-12.95	55	E7J 742
	1.4	10.94-11.95	57	E6J 700
	1.4	10.94-11.95	59	E7J 706
	1.7	04.92-12.95	54	F3N 741/F3N 740
	1.7	05.92-11.95	55	F3N 741/F3N 740
	1.7	04.92-12.95	66	F3N 743
	1.7	01.93-08.95	68	F2N 720/F2N 721
	1.8	04.92-12.95	65	F3P 70_/F3P 760
	1.8	04.92-12.95	66	F3P 706/F3P 760
	1.8	05.92-09.94	67	F3P 765
	1.8	05.92-11.95	79	F3P 706/F3P 700
	1.8	04.92-05.94	81	F3P 700
	1.8 16V	04.92-12.95	99	F7P 704
19 II Van (S53_)	1.2	03.92-12.95	40	C1G 730

< CL118

RENAULT

21 (B48_)	1.7	09.89-10.92	54	F3N 726
	1.7	07.89-05.93	55	F2N 712/F3N 726
	1.7	09.89-06.94	66	F3N 723/F3N 722
	2.0	02.90-10.92	99	J7R 740
	2.0 4x4	09.90-10.92	99	J7R 740
	2.2	09.89-06.94	79	J7T 754/J7T 755
	2.2 4x4	07.90-06.94	79	J7T 754/J7T 755
21 Combi (K48_)	1.7	06.86-12.89	54	F2N 750
	1.7	06.86-03.93	55	F2N 712
	1.7	06.87-04.89	64	F2N 752
	1.7	10.86-12.88	65	F2N 710
	1.7	10.89-12.93	66	F3N 723/F3N 722
	1.7	06.86-12.89	69	F3N 723/F3N 722
	1.7 cat	05.88-06.93	54	F3N 726
	2.0	06.91-05.93	75	J6R 759/_758/_792
	2.0	06.86-12.88	85	J7R 750/J7R 751
	2.0	03.86-12.93	88	J7R 747/J7R 746
	2.0	06.90-02.94	99	J7R 740
	2.0 4x4	03.89-12.93	88	J7R 747/J7R 746
	2.2	06.86-11.93	79	J7T 754/J7T 755
	2.2 4x4	06.86-12.93	79	J7T 754/J7T 755
21 Sedan (L48_)	1.7	07.86-02.94	54	F3N 726 /F2N 750
	1.7	03.86-12.87	55	F2N 712
	1.7	06.87-04.89	64	F2N 752
	1.7	03.86-03.93	65	F2N 710
	1.7	03.86-02.94	69	F3N 723/F3N 722
	1.7	09.89-02.94	66	F3N 723/F3N 722
	2.0	03.86-10.93	75	J6R 759/J6R 758
	2.0	04.88-06.89	76	J6R 793/J6R 792
	2.0	05.91-10.93	78	J6R 758
	2.0	03.86-12.88	85	J7R 750/J7R 751
	2.0	03.86-12.93	88	J7R 747/J7R 746
	2.0	02.90-06.94	99	J7R 740
	2.0 4x4	12.89-02.94	99	J7R 740
	2.0 Turbo	02.90-10.92	119	J7R 756
	2.0 Turbo	04.87-03.90	129	J7R 752
	2.0 Turbo 4x4	02.90-10.92	119	J7R 756
	2.0 Turbo 4x4	08.89-10.93	129	J7R 752
	2.2	07.86-02.94	79	J7T 754/J7T 755
	2.2 4x4	07.90-02.94	79	J7T 754/J7T 755
25 (B29_)	2.0	04.84-12.92	74	J6R 76_/J6R 70_
	2.0	03.87-12.93	88	J7R 723/J7R 722
	2.0 12V	06.89-12.92	99	J7R 726
	2.0 12V	06.88-12.93	103	J7R 721/J7R 720
	2.2	11.85-03.89	76	
	2.2	09.86-12.92	79	J7T 708/_733 /_732
	2.2	04.84-12.89	89	J7T 715
	2.2	04.84-12.89	91	J7T 730/J7T 731
	2.4 V6 Turbo	10.84-05.90	133	Z7U 702
	2.5 V6 Turbo	01.90-12.92	151	Z7U 700
	2.8 V6	06.87-02.90	115	Z7W 700
	2.8 V6 Injection	06.87-12.92	110	Z7W 706/_707/_709
Clio I (B/C57_, 5/357_)	1.2	01.91-06.96	40	E7F 706
	1.2	05.90-09.98	43	E7F 750
	1.2	05.90-03.96	44	E5F 710
	1.4	01.91-09.98	55	E7J 756/E7J 757
	1.4	01.91-09.98	58	E7J 719 /E7J 718
	1.4	01.91-09.98	59	E7J 711
	1.8	01.91-09.98	65	F3P 710 /F3P 714
	1.8	08.90-04.96	66	F3P 755
	1.8	08.94-09.98	66	F3P 755 /F3P 754
	1.8 16V	01.91-03.96	99	F7P 722
	1.8 RSi	08.95-09.98	79	F3P 758
	1.8 RSi	01.93-08.95	80	F3P 712
	2.0 Williams	01.94-09.98	108	F7R 700
Clio I Van (S57_)	1.2	01.91-09.98	40	E7F 706
Espace I (J11_)	2.0	01.88-12.90	74	J6R 734
	2.0	07.84-12.90	80	J6R 234/J6R 236
	2.0 i	01.89-12.90	87	J7R 760
	2.0 i Quadra	03.88-12.92	87	J7R 760
	2.2	07.86-12.90	79	J7T 770

< CL118

RENAULT				
Espace I (J11_)	2.2 Quadra	01.88-12.90	79	J7T 770
Espace II (J/S63_)	2.0	01.91-10.96	76	J7R 768
	2.2	01.91-10.96	79	J7T 772/_776/_773
	2.2 4x4	03.91-12.96	79	J7T 772/J7T 773
	2.8 V6	01.91-10.96	110	Z7W 717/_712/_713
Laguna I (B56_, 556_)	1.8	11.93-03.01	66	F3P 720/F3P 724
	1.8	08.95-03.01	66	F3P 678
	1.8	08.95-03.01	69	F3P 720/F3P 724
	2.0	11.93-03.01	83	F3R 722/F3R 723
Laguna I Grandtour	1.8	09.95-03.01	66	F3P 678
	1.8	09.95-03.01	69	F3P 720/F3P 724
	2.0	09.95-03.01	83	F3R 722/F3R 723
Megane I (BA)	1.4 e	01.96-02.99	55	E7J 764
	1.4 Eco	01.96-03.99	52	E7J 624
Megane I Classic (LA)	1.4	09.96-02.99	55	E7J 764
Megane Scenic (JA)	1.4 i	01.97-09.99	55	E7J 764
Rapid Van (F40, G40)	1.4	07.85-08.91	43	C1J 780/C1J 768
	1.4	03.86-08.91	44	C2J 784
	1.4	09.91-03.98	55	E7J 720/E7J 724
	1.4	01.94-03.98	58	E7J 728
	1.4 cat	08.88-03.98	43	C3J 76_/C3J 70_
Safrane I (B54_)	2.0	11.92-07.96	77	J7R 732/J7R 733
	2.0 12V	04.92-07.96	97	J7R 735/J7R 734
	2.2	04.92-07.96	79	J7T 762
	2.2	04.92-07.96	101	J7T 760/J7T 761
	3.0 Biturbo 4x4	02.93-07.96	193	Z7X 726
	3.0 V6	12.92-07.96	123	Z7X 72_/Z7X 753
	3.0 V6 4x4	12.92-07.96	123	Z7X 721/_723/_722
Safrane II (B54_)	3.0 V6	07.96-12.00	123	Z7X 755
Super 5 (B/C40_)	1.4	10.84-06.88	43	C1J 780/C1J 768
	1.4	06.87-08.90	44	C2J 784
	1.4	06.87-07.89	49	C2J 782
	1.4	10.84-07.89	52	C2J 78_/C2J 700
	1.4 cat	10.85-12.96	43	C3J 700/_702/_760
	1.4 Turbo	04.85-08.90	88	C1J 784/_782/_788
	1.7	10.86-03.95	54	F3N 716 /F3N 717
	1.7	06.87-03.95	64	F2N 742/F2N 740
	1.7 i	10.86-08.91	69	F3N 722/F3N 702
Trafic Bus (T5, T6, T7)	1.7	06.86-04.89	50	F1N 724
	2.0	06.86-04.89	59	J5R 722/_716/_726
	2.0 4x4	06.86-04.89	59	J5R 722/_716/_726
Trafic Bus (TXW)	1.7	08.92-08.94	50	F1N 724
	2.0	05.89-08.90	59	J5R 726
	2.2	05.89-06.94	70	J7T 780
	2.2	06.94-10.97	74	J7T 600
	2.2 4x4	05.89-06.94	70	J7T 780
	2.2 4x4	06.94-10.97	74	J7T 600
Trafic Flatbed (P6)	1.7	06.86-04.89	50	F1N 722
	2.0	03.80-04.89	59	J5R 726
Trafic Flatbed (PXX)	1.7	05.89-08.94	50	F1N 722
	2.0	03.89-12.91	60	J5R 726
	2.0 RWD	05.89-10.97	59	J5R 726
	2.2	05.89-06.94	70	J7T 780
	2.2	09.94-04.98	74	J7T 600
	2.2 4x4	09.94-04.98	74	J7T 600
Trafic Van (T1, T3, T4)	1.7	06.86-04.89	50	F1N 724
	2.0	06.86-04.89	59	J5R 722/_716/_726
	2.0 4x4	06.86-04.89	59	J5R 722/_716/_726
Trafic Van (TXX)	1.7	08.92-08.94	50	F1N 720
	2.0	05.89-08.90	59	J5R 716
	2.2	05.89-06.94	70	J7T 780
	2.2	06.94-10.97	74	J7T 600
	2.2 4x4	05.89-06.94	70	J7T 780
	2.2 4x4	06.94-10.97	74	J7T 600
VOLVO				
340-360 (343, 345)	1.4	08.82-08.85	46	B 14.3 E
	1.4	08.86-12.88	50	B 14.4 S
	1.4	08.87-07.88	51	B 14.4 S
	1.7	08.85-07.91	59	B 17 2 K
	2.0	08.84-07.87	77	B 200 K
	2.0	08.88-07.89	80	B 200 F

< CL118

VOLVO				
340-360 (343, 345)	2.0	08.87-07.88	81	B 200 F
	2.0	08.86-07.88	82	B 200 E/B 200 F
	2.0	08.84-07.86	87	B 200 E
340-360 Sedan (344)	1.4	08.87-07.88	51	B 14.4 S
	1.7	08.85-07.91	59	B 17 2 K
	2.0	08.84-07.90	75	B 200 K
	2.0	08.84-07.87	77	B 200 K
	2.0	08.87-07.88	81	B 200 EA
	2.0	08.86-07.88	82	B 200 EA
	2.0	08.84-07.86	85	B 200 E
	2.0	08.84-07.86	87	B 200 E
440 K (445)	1.6	09.88-12.96	61	B 16 F
	1.7	09.88-12.96	64	B 18 KP
	1.7	08.88-07.89	70	B 18 F
	1.7	08.89-12.96	75	B 18 FP
	1.7	09.88-12.96	78	B 18 EP
	1.8	08.91-07.96	66	B 18 U
	1.8	09.95-12.96	66	B 18 U
	2.0	08.93-07.96	80	B 20 F
	2.0	08.92-07.95	81	B 20 F
460 L (464)	1.6	07.92-07.96	61	B 16 F
	1.7	09.88-07.96	64	B 18 KP
	1.7	08.89-07.92	75	B 18 EP
	1.8	08.91-07.96	66	B 18 U
	2.0	08.93-07.96	80	B 20 F
	2.0	08.92-07.95	81	B 20 F
480 E	1.7	08.87-07.89	70	B 18 F
	1.7	08.89-07.96	75	B 18 EP
	1.7	04.86-07.89	78	B 18 E
	1.7	08.86-07.88	80	B 18 E
	2.0	08.92-09.95	81	B 20 F

CL119

PIN

OEM-No.

RENAULT 7401275174
VOLVO 1275174

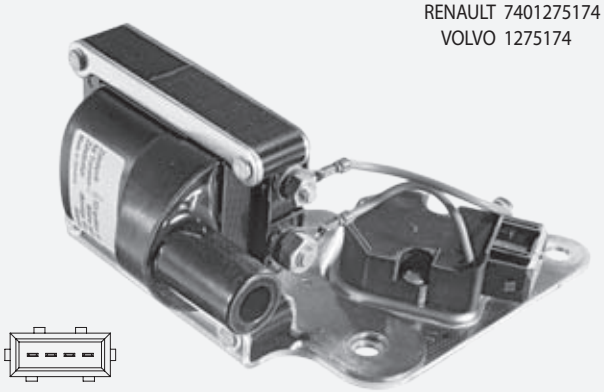

RENAULT				
Safrane II (B54_)	2.5 20V	07.96-12.00	121	N7U 700/N7U 701
VOLVO				
850 (LS)	2.0	08.94-12.96	93	B 5202 S
	2.0	06.91-12.96	105	B 5204 F
	2.0 Turbo	08.93-12.96	155	B 5204 T/B 5204FT
	2.3 T5	08.93-07.96	166	B 5234 FT
	2.3 T5-R	08.95-12.96	184	B 5234 T4
	2.5	06.91-07.94	103	B 5252
	2.5	08.94-12.96	106	B 5252 FS
	2.5	08.91-12.96	125	B 5254 S
850 Combi (LW)	2.0	08.94-12.96	93	B 5202 S
	2.0	02.93-12.96	105	B 5204 F
	2.0 Turbo	02.93-12.96	155	B 5204 T/B 5204FT
	2.3 T5	02.93-12.96	166	B 5234 FT
	2.3 T5-R	08.95-12.96	184	B 5234 T4
	2.5	08.92-07.94	103	B 5252
	2.5	08.94-12.96	106	B 5252 FS
	2.5	09.92-12.96	125	B 5254 S
	2.5 AWD	04.96-12.96	142	B 5254 T
C70 I Cabriolet	2.0	03.98-10.05	132	B 5204 T2
	2.0 T	03.98-08.98	166	B 5204 T3

CL119 ▶

< CL119

VOLVO				
C70 I Cabriolet	2.3 T5	03.98-08.98	176	B 5234 T3
	2.5 T	03.98-08.98	142	B 5254 T
C70 I Coupe	2.0	03.97-09.02	132	B 5204 T2
	2.0 T	03.97-07.98	166	B 5204 T3
	2.3 T-5	03.97-07.98	176	B 5234 T3
	2.5 T	03.97-09.02	142	B 5254 T
S70 (LS)	2.0	01.97-11.00	93	B 5202 S/B 5202 FS
	2.0	01.97-11.00	105	B 5204 F
	2.0	01.97-11.00	132	B 5204 T2
	2.0 Turbo	01.97-11.00	155	B 5204 T
	2.0 Turbo	01.97-11.00	166	B 5204 T3
	2.3	04.99-09.00	195	B 5234 T7
	2.3 T-5	01.97-07.98	176	B 5234 T3
	2.3 T5 AWD	07.97-09.00	184	B 5234 T4
	2.3 Turbo	01.97-11.00	184	B 5234 FT+
	2.4	01.97-11.00	125	B 5244 S/B 5254S
	2.4 AWD	11.96-05.99	106	B 5252 FS
	2.4 T5 AWD	11.96-04.99	142	B 5254 T
	2.4 Turbo	01.97-07.98	142	B 5254 T/B 5244T
	2.5	01.97-11.00	106	B 5252 FS
	2.5	06.98-11.00	121	B 5254 S
	2.5 BiFuel	10.98-11.00	106	GB 5252 S
V70 I (LV)	2.0	01.97-03.00	93	B 5202 S
	2.0	01.97-03.00	105	B 5204 F
	2.0	01.97-03.00	132	B 5204 T2
	2.0 Turbo	01.97-07.98	155	B 5204 T
	2.0 Turbo	01.97-07.98	166	B 5204 T3
	2.0 Turbo AWD	01.97-07.98	166	B 5204 T3
	2.3 AWD	04.97-07.98	177	B 5234 T3
	2.3 Turbo	01.97-03.00	184	B 5234 FT+
	2.3 T AWD	04.97-03.00	184	B 5234 T4
	2.3 T-5	01.97-07.98	176	B 5234 T3
	2.3 T-5 AWD	01.97-07.98	176	B 5234 T3
	2.4 Turbo	01.97-07.98	142	B 5254 T
	2.5	01.97-03.00	106	B 5252 FS
	2.5	06.98-03.00	121	B 5254 S
	2.5 BiFuel	10.98-08.99	106	GB 5252 S
	2.5 Turbo AWD	01.97-07.98	142	B 5254 T/B 5244T

CL120

OEM-No.
PSA 5970.90
5970.97
9654347080
9467511580

CITROEN				
Berlingo (MF)	1.4 i	06.98-	55	KFX/KFW
Berlingo Van (M_)	1.4 i	06.98-	55	KFX/KFW
C2 (JM_)	1.4	09.03-	54	KFV (TU3JP)
C3 II	1.1	11.09-	44	HFX (TU1JP)
	1.4	11.09-	54	KFT/KFV
C3 Pluriel (HB_)	1.4	05.03-	54	KFV (TU3JP)
Nemo Combi	1.4	04.09-	54	KFT/KFV
Nemo Van (AA_)	1.4	02.08-	54	KFV (TU3A)
PEUGEOT				
1007 (KM_)	1.4	04.05-	54	KFV (TU3JP)
206 CC (2A/C)	1.4 i	09.98-	55	KFX/KFW
206 Sedan	1.4	03.07-	55	KFV/KFW
206+ (T3E)	1.1	01.09-	44	HFX
	1.4 i	01.09-	55	KFV/KFW
207 (WA_, WC_)	1.4	02.06-	53	KFV (TU3A)

< CL120

PEUGEOT				
207 SW (WK_)	1.4	06.07-	54	KFV (TU3A)
Bipper (AA_)	1.4	02.08-	54	KFV (TU3A)
Bipper Tepee	1.4	04.08-	54	KFV (TU3A)
Partner Combispace	1.4	09.05-	55	KFX/KFW

CL121

OEM-No.
VOLVO 30713416
9125601

1 coil per cylinder

VOLVO				
C70 I Cabriolet	2.0 T	03.00-10.05	120	B 5204 T4
	2.0 T	08.98-10.05	166	B 5204 T3
	2.3 T5	08.98-10.05	176	B 5234 T3
	2.3 T5	07.02-10.05	180	B 5234 T9
	2.4 T	07.02-10.05	147	B 5244 T7
	2.5	06.98-10.05	125	B 5254 S
	2.5 T	08.98-10.05	142	B 5254 T/B 5244T
C70 I Coupe	2.0 T	03.00-09.02	120	B 5204 T4
	2.0 T	08.98-09.02	166	B 5204 T3
	2.3 T-5	08.98-09.02	176	B 5234 T3
	2.5	03.99-09.02	121	B 5254 S
	2.5	05.99-09.02	125	B 5244 S/B 5254S
S60 I	2.0 T	07.00-07.04	132	B 5204 T5
	2.3 T5	11.00-04.10	184	B 5234 T3
	2.4	11.00-04.10	103	B 5244 S2
	2.4	11.00-04.10	125	B 5244 S
	2.4 BiFuel	06.02-04.10	103	B 5244 SG
	2.5 T	02.04-04.10	154	B 5254 T2
	2.5 T AWD	04.04-04.10	154	B 5254 T2
S70 (LS)	2.0	01.97-11.00	120	B 5204 T4
	2.0 Turbo	01.97-11.00	166	B 5204 T3
	2.3	04.99-09.00	195	B 5234 T7
	2.3 T-5	08.98-11.00	176	B 5234 T3
	2.4	08.99-11.00	103	B 5244 S_
	2.4	01.97-11.00	125	B 5244 S/B 5254S
	2.4 AWD	04.99-09.00	103	B 5244 S2
	2.4 AWD	10.98-05.99	121	B 5254 S
	2.4 AWD	04.99-09.00	125	B 5244 S
	2.4 T5 AWD	08.98-04.99	142	B 5254 T
	2.4 Turbo	08.98-11.00	142	B 5254 T/B 5244T
	2.5 BiFuel	07.99-11.00	103	B 5244 SG
S80 I (TS, XY)	2.0	06.98-07.06	120	B 5204 T4
	2.0 T	12.99-07.04	132	B 5204 T5
	2.0 T	06.98-07.06	166	B 5204 T3
	2.4	01.99-07.06	103	B 5244 S2
	2.4	01.99-07.06	125	B 5244 S
	2.4 BiFuel	09.01-07.06	103	B 5244 SG2
	2.4 T	06.00-07.06	147	B 5244 T3
	2.4 T5 AWD	04.00-09.03	147	B 5244 T3
	2.5 T	03.03-07.06	154	B 5254 T2
	2.5 T AWD	07.03-07.06	154	B 5254 T2
	2.8 T6	05.98-07.06	200	B 6284 T
	2.9	03.99-07.06	147	B 6294 S
	2.9	05.98-07.06	150	B 6304 S3
	3.0	06.01-07.06	144	B 6294 S2
	3.0 T6	06.01-07.06	200	B 6294 T
V70 I (LV)	2.0	01.97-03.00	120	B 5204 T4
	2.0 Turbo	08.98-03.00	155	B 5204 T
	2.0 Turbo	08.98-03.00	166	B 5204 T3

< CL121

VOLVO

V70 I (LV)	2.0 Turbo AWD	08.98-03.00	166	B 5204 T3
	2.3 AWD	08.98-09.98	177	B 5234 T3
	2.3 T-5	08.98-03.00	176	B 5234 T3
	2.3 T-5 AWD	08.98-03.00	176	B 5234 T3
	2.4	08.99-05.00	103	B 5244 S_
	2.4	01.97-05.00	125	B 5244 S/B 5254S
	2.4 AWD	10.98-05.99	121	B 5254 S
	2.4 BiFuel	08.99-03.00	103	B 5244 SG
	2.4 Turbo	08.98-03.00	142	B 5254 T/B 5244T
	2.5 Turbo AWD	08.98-05.00	142	B 5254 T/B 5244T
V70 II (SW)	2.0 T	07.01-08.07	132	B 5204 T5
	2.3 T5	03.00-08.04	184	B 5234 T3
	2.4	03.00-08.07	103	B 5244 S2
	2.4	03.00-08.07	125	B 5244 S
	2.4 BiFuel	09.01-08.07	103	B 5244 SG
	2.4 T	03.00-08.03	147	B 5244 T3
	2.4 T AWD	09.01-08.02	147	B 5244 T3
	2.5 AWD	09.02-12.04	155	B 5254 T2
	2.5 T	04.04-08.07	154	B 5254 T2
	2.5 T AWD	09.02-08.07	154	B 5254 T2
XC70 Cross Country	2.4 T XC AWD	11.97-09.02	142	B 5254 T
	2.4 T XC AWD	03.00-09.02	147	B 5244 T3
	2.5 T XC AWD	09.02-08.07	154	B 5254 T2
XC90 I	2.5 T	10.02-	154	B 5254 T2
	2.5 T AWD	10.12-	154	B 5254 T9
	2.9 T6	10.02-	200	B 6294 T

CL122

SAE — OEM-No. RENAULT 7700749450

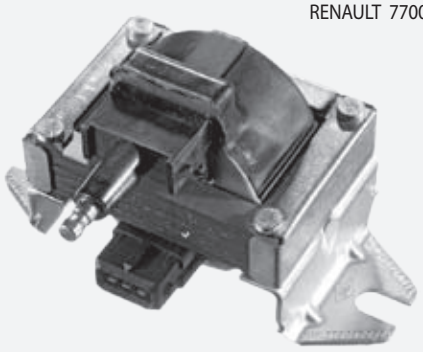

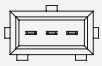

RENAULT

19 II (B/C53_)	1.8	05.94-12.95	79	F3P 765/F3P 682
19 II Chamade	1.8	05.94-12.95	79	F3P 682
Clio I	1.2	01.96-12.96	40	C3G 720
Rapid Van	1.2	09.91-03.98	40	C3G 712/C3G 710
Twingo I (C06_)	1.2	03.93-10.96	40	C3G 702/C3G 700
Twingo I Van (S06_)	1.2	03.93-05.96	40	C3G 702/C3G 700

CL123

PIN — OEM-No. RENAULT 7700107269

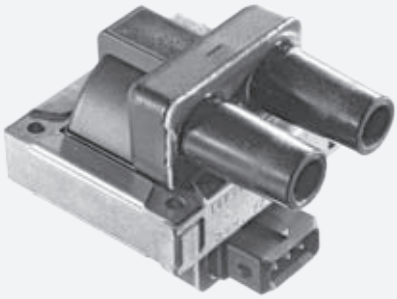

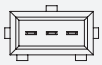

RENAULT

Espace III (JE0_)	2.0	04.97-10.00	84	F3R 769/_728/_768
Laguna I (B56_, 556_)	1.8	04.97-03.01	66	F3P 670
	1.8	04.97-02.01	69	F3P 674
Laguna I (B56_, 556_)	2.0	04.97-02.01	84	F3R 768

< CL123

RENAULT

Laguna I Grandtour	1.8	04.97-03.01	66	F3P 670
Megane I (BA)	2.0 16V	07.96-08.03	108	F7R 710/F7R 714
	2.0 i	03.99-08.03	80	F3R 751/F3R 750
	2.0 i	04.97-08.03	84	F3R 751/F3R 750
Megane I Cabriolet	2.0	04.97-08.03	84	F3R 750
	2.0 i	03.99-08.03	80	F3R 791/F3R 796
Megane I Classic (LA)	2.0 i	03.99-08.03	80	F3R 79_/F3R 75_
	2.0 i	04.97-08.03	84	F3R 79_/F3R 75_
Megane I Coach (DA)	2.0 i	03.99-08.03	80	F3R 791/F3R 796
	2.0 i	04.97-08.03	84	F3R 751/F3R 750
Megane Scenic (JA)	2.0 i	01.99-09.99	80	F3R 796
	2.0 i	04.97-09.99	84	F3R 751/F3R 750
	2.0 RXE 4x4	05.97-10.99	84	F3R 750

CL124

SAE — OEM-No. RENAULT 7700854306 7700872265

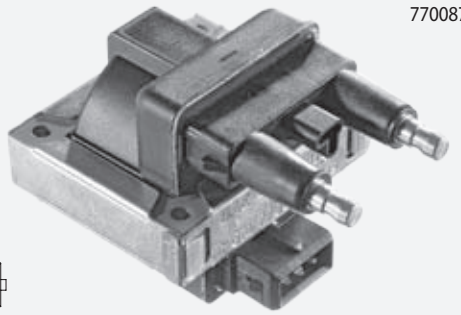

colour of socket: black

RENAULT

Espace III (JE0_)	2.0	11.96-04.97	84	F3R 769/_728/_768
	3.0	11.96-10.98	123	Z7X 775
Laguna I (B56_, 556_)	1.8	08.95-04.97	66	F3P 670
	1.8	06.95-04.97	69	F3P 674
	2.0	03.99-03.01	80	F3R 611
	2.0	06.95-04.97	84	F3R 768
	3.0	11.93-03.01	123	Z7X 765/Z7X 760
Laguna I Grandtour	1.8	09.95-04.97	66	F3P 670
	3.0	02.96-03.01	123	Z7X 765
Megane I (BA)	2.0 i	03.99-08.03	80	F3R 751/F3R 750
	2.0 i	01.96-04.97	84	F3R 751/F3R 750
Megane I Cabriolet	2.0	04.97-08.03	84	F3R 750
	2.0 i	03.99-08.03	80	F3R 791/F3R 796
Megane I Classic (LA)	2.0 i	03.99-08.03	80	F3R 79_/F3R 75_
	2.0 i	09.96-04.97	84	F3R 79_/F3R 75_
Megane I Coach (DA)	2.0 i	03.99-08.03	80	F3R 791/F3R 796
	2.0 i	03.96-04.97	84	F3R 751/F3R 750
Megane Scenic (JA)	2.0 i	01.99-09.99	80	F3R 796
	2.0 i	01.97-04.97	84	F3R 751/F3R 750
	2.0 RXE 4x4	05.97-10.99	84	F3R 750

CL125

SAE — OEM-No. RENAULT 7700854307 7700872692

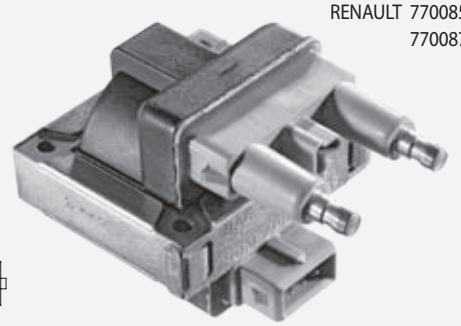

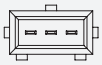

colour of socket: grey

RENAULT

Espace III (JE0_)	3.0	11.96-10.98	123	Z7X 775
Laguna I (B56_, 556_)	3.0	11.93-03.01	123	Z7X 765/Z7X 760
Laguna I Grandtour	3.0	02.96-03.01	123	Z7X 765

CL126

SAE

OEM-No.
RENAULT 7700858320
7700872693

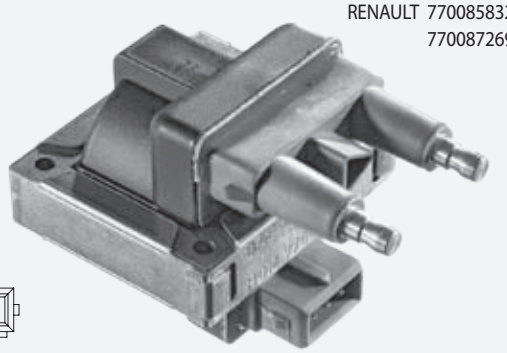

colour of socket: brown

RENAULT				
Espace III (JE0_)	3.0	11.96-10.98	123	Z7X 775
Laguna I (B56_, 556_)	3.0	11.93-03.01	123	Z7X 765/Z7X 760
Laguna I Grandtour	3.0	02.96-03.01	123	Z7X 765

CL127

OEM-No.
PSA 5970.56
96213086
9621308680

CITROEN				
Saxo (S0, S1)	1.6 VTS	06.96-09.03	87	NFX (TU5JP4)
PEUGEOT				
106 II (1)	1.6 S16	05.96-	87	NFX (TU5J4)

CL128

PIN

OEM-No.
RENAULT 77 00 100 589

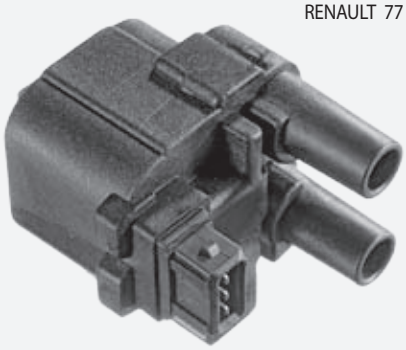

for cylinder 1 & 4 (coil CL102: 2 & 3)

RENAULT				
Clio II	1.4	09.98-05.05	55	E7J 634/780/K7J 700
	1.6	09.98-05.05	66	K7M 744/K7M 745
Kangoo (KC)	1.4	08.97-	55	E7J 63_/K7J 70_
Kangoo Express (FC)	1.4	08.97-	55	E7J 63_/K7J 70_
Laguna I (B56_, 556_)	1.6 16V	11.97-03.99	79	K4M 720/K4M 724
Laguna I Grandtour	1.6 16V	11.97-03.99	79	K4M 720/K4M 724
Megane I (BA)	1.6 e	03.97-03.99	66	K7M 702/_703/_790
	1.6 i	03.97-03.99	55	K7M 720
Megane I Cabriolet	1.6 e	04.97-03.99	66	K7M 702/K7M 703
Megane I Classic (LA)	1.6 e	04.97-03.99	66	K7M 702/_703/_790
Megane I Coach (DA)	1.6 e	03.97-03.99	66	K7M 702/K7M 703
Megane Scenic (JA)	1.6 e	04.97-10.99	66	K7M 702/K7M 703
	1.6 i	04.97-09.99	55	K7M 720

CL129

SAE

OEM-No.
FIAT 9604137880
PSA 5970. 47
96 041 378

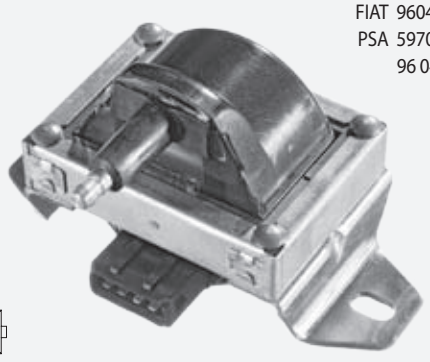

CITROEN				
XM (Y3)	2.0	05.89-04.94	84	
	2.0 i	05.89-04.94	79	RDZ (XU10MZ)
XM Break (Y3)	2.0	10.91-07.94	85	
	2.0 i	11.91-04.94	79	RDZ/XU102C
PEUGEOT				
605 (6B)	2.0	02.90-09.99	79	
	2.0	06.89-09.99	84	R5A (XU102C)

CL130

OEM-No.
RENAULT 82 00 025 256
82 00 051 128
82 00 084 401

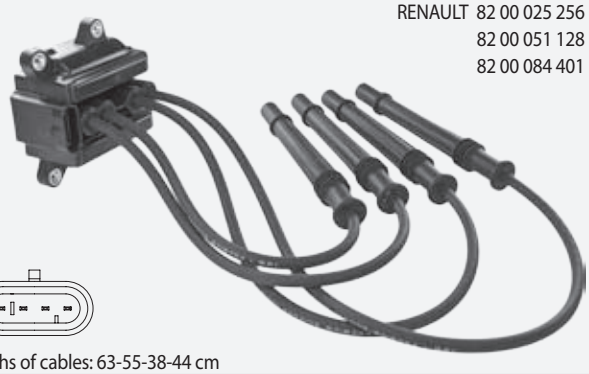

lengths of cables: 63-55-38-44 cm

RENAULT				
Clio II	1.2	06.01-	55	
	1.2 16V	06.04-	55	D4F 728/_714/_706
Kangoo (KC)	1.2 16V	06.04-	55	D4F 714/_716/_712
Kangoo Express (FC)	1.2 16V	06.04-	55	D4F 714/_712/_730
Thalia I (LB0/1/2_)	1.2 16V	04.02-	55	D4F 712
Twingo I (C06_)	1.2 16V	01.01-	55	D4F 702

CL131

PIN

OEM-No.
RENAULT 77 00 872 449
77 00 872 834
77 00 873 701
82 00 141 149

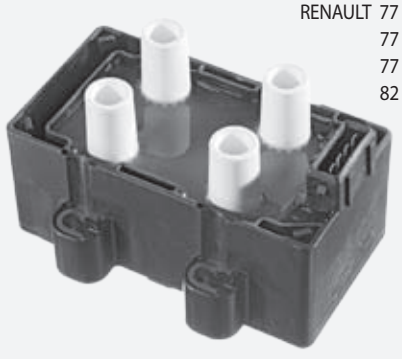

RENAULT				
Clio I (B/C57_, 5/357_)	1.2	01.96-09.98	40	D7F 730
	1.2	01.96-09.98	43	D7F 730
Clio II	1.2	09.98-10.99	43	D7F 766/_720/_764
	2.0 16V Sport	02.00-	124	F4R 730/F4R 736
	2.0 16V Sport	01.04-	132	F4R 738
Clio II Van	1.1	09.98-	43	D7F 720/_726/_746
Kangoo (KC)	1.2	08.97-10.99	43	D7F 710/_722/_720

< CL131

RENAULT				
Kangoo Express (FC)	1.2	08.97-10.99	43	D7F 710/_744/_722
Laguna II (BG0/1_)	2.0 16V IDE	04.01-	103	F5R 701/F5R 700
Laguna II Grandtour	2.0 16V IDE	04.01-	103	F5R 701/F5R 700
Megane I Cabriolet	2.0 16V	10.96-11.99	108	F7R 710/F7R 714
Megane I Coach (DA)	2.0 16V	03.96-11.99	108	F7R 710/F7R 714
Twingo I (C06_)	1.2	05.96-10.98	40	D7F 700/D7F 701
	1.2	05.96-10.98	43	D7F 700/_702/_704
Twingo I Van (S06_)	1.2	05.96-	43	D7F 706/D7F 701

CL132

OEM-No.
PSA 5970.55
96 213 181

1 coil per cylinder

CITROEN				
Xsara (N1)	2.0 16V	04.97-09.00	120	RFS (XU10J4RS)
Xsara Coupe (N0)	2.0 i 16V	02.98-03.05	120	RFS (XU10J4RS)
ZX (N2)	2.0 i 16V	07.95-06.97	110	RFT (XU10J4/Z)
	2.0 i 16V	05.96-06.97	120	RFS (XU10J4RS)
PEUGEOT				
306 CC (7_, N_)	2.0 S16	03.96-05.01	120	RFS (XU10J4RS)

CL133

OEM-No.
PSA 5970.84
5970.A5

CITROEN				
C4 Coupe (LA_)	2.0 16V	11.04-12.10	130	RFK (EW10J4S)
C4 I (LC_)	2.0 16V	11.04-07.08	130	RFK (EW10J4S)
C8 (EA_, EB_)	2.2	07.02-	116	3FZ (EW12J4)
PEUGEOT				
307 (3A/C)	2.0 16V	06.05-	130	RFK (EW10J4S)
307 Break (3E)	2.0 16V	06.05-	130	RFK (EW10J4S)
307 CC (3B)	2.0 16V	10.03-	130	RFK (EW10J4S)
406 (8B)	2.2	07.00-05.04	116	3FZ (EW12J4)
406 Break (8E/F)	2.2	07.00-10.04	116	3FZ (EW12J4)
406 Coupe (8C)	2.2	03.02-12.04	116	3FZ (EW12J4)
407 (6D_)	2.2	05.04-	116	3FZ (EW12J4)
407 Coupe (6C_)	2.2 16V	10.05-	120	3FY (EW12J4)
407 SW (6E_)	2.2	05.04-	116	3FZ (EW12J4)
607 (9D, 9U)	2.2 16V	02.00-	116	3FZ (EW12J4)
807 (E)	2.2	06.02-	116	3FZ (EW12J4)

CL134

OEM-No.
RENAULT 82 00 360 911
82 00 702 693

lengths of cables: 47-42-42-42 cm

RENAULT				
Clio III (BR, CR)	1.2 16V	06.05-05.08	48	D4F 740
	1.2 16V	06.05-05.08	55	D4F 740
	1.2 16V	06.05-05.08	58	D4F 764
Kangoo (KC)	1.2 16V	06.01-	55	D4F 714/_716/_712
Kangoo Express (FC)	1.2 16V	10.01-	55	D4F 714/_712/_730
Modus / Grand Modus	1.2	05.05-	48	D4F 740
	1.2	12.04-	55	D4F 740
	1.2	12.04-	58	D4F 764

CL135

OEM-No.
FIAT 9633001580
RENAULT 9633001580
PSA 5970.77
5970.94
96 362 683
96 644 018 80

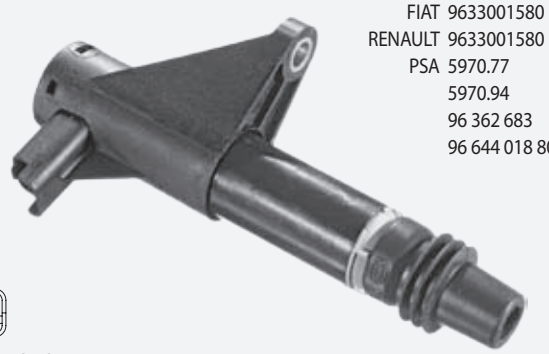

1 coil per cylinder

CITROEN				
C5 I (DC_)	3.0 V6	03.01-08.04	152	XFX (ES9J4S)
C5 I Break (DE_)	3.0 Carlsson	09.03-08.04	173	
	3.0 V6	06.01-08.04	152	XFX (ES9J4S)
C5 II (RC_)	3.0 V6	09.04-	152	XFU/XFX
C5 II Break (RE_)	3.0 V6	09.04-	152	XFU (ES9A)
C5 III (RD_)	3.0 V6	02.08-	155	XFU (ES9A)
C5 III Break (TD_)	3.0 V6	02.08-	155	XFU (ES9A)
C6 (TD_)	3.0 V6	09.05-	155	XFV/XFX
C8 (EA_, EB_)	3.0 V6	07.02-	150	XFX (ES9J4S)
FIAT				
Ulysse (179AX)	3.0	08.02-06.11	150	XFW
LANCIA				
Phedra (179)	3.0 V6	09.02-11.10	150	ES9 J4S
PEUGEOT				
406 (8B)	3.0 V6	03.00-05.04	152	XFX (ES9J4S)
406 Break (8E/F)	3.0 V6	03.00-10.04	152	XFX (ES9J4S)
406 Coupe (8C)	3.0 V6	03.00-12.04	152	XFX (ES9J4S)
407 (6D_)	3.0	05.04-	155	XFV (ES9A)
407 Coupe (6C_)	3.0 V6	10.05-	155	XFV (ES9A)
407 SW (6E_)	3.0	05.04-	155	XFV (ES9A)
607 (9D, 9U)	3.0 V6 24V	02.00-	152	XFX (ES9J4S)
	3.0 V6 24V	03.04-	155	XFV (ES9A)
807 (E)	3.0 V6	06.02-	150	XFX (ES9J4S)
RENAULT				
Avantime (DE0_)	3.0 V6	09.01-05.03	152	L7X 720/L7X 721
Clio II	3.0 V6 Sport	11.00-12.02	166	L7X 760
	3.0 V6 Sport	12.02-	187	L7X 762
Espace III (JE0_)	3.0 V6 24V	10.98-10.02	140	L7X 727
Laguna II (BG0/1_)	3.0 V6 24V	03.01-	152	L7X 731
Laguna II Grandtour	3.0 V6 24V	03.01-	152	L7X 731

CL136

SAE

OEM-No.
RENAULT 7700863020
7700865923
VOLVO 70863020
70863020-7

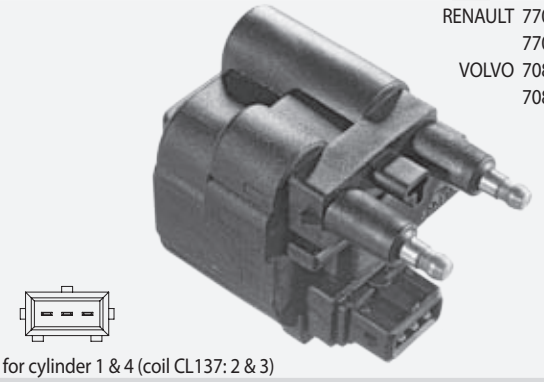

for cylinder 1 & 4 (coil CL137: 2 & 3)

RENAULT				
Laguna I (B56_, 556_)	2.0	06.95-02.01	103	N7Q 700/N7Q 704
	2.0 16V	06.95-03.01	102	N7Q 700/N7Q 704
Laguna I Grandtour	2.0 16V	09.95-03.01	102	N7Q 700/N7Q 704
Safrane II (B54_)	2.0 16V	07.96-12.00	100	N7Q 710/N7Q 711
VOLVO				
S40 I (VS)	1.6	09.95-08.99	77	B 4164 S
	1.6	03.99-12.03	80	B 4164 S2
	1.8	07.95-08.99	85	B 4184 S3/B 4184S
	1.8	03.99-12.03	90	B 4184 S2/B 4184S9
	1.8 i	06.01-12.03	90	B 4184 SJ
	1.8 i	03.98-12.03	92	B 4184 SM
	2.0	07.95-12.03	100	B 4204 S2/B 4204S
	2.0	07.95-08.99	103	B 4204 S
V40 Combi (VW)	1.6	12.95-08.99	77	B 4164 S
	1.6	03.99-06.04	80	B 4164 S2
	1.8	07.95-08.99	85	B 4184 S3/B 4184S
	1.8	03.99-06.04	90	B 4184 S2/B 4184S9
	1.8 i	03.98-06.04	92	B 4184 SM
	2.0	07.95-06.04	100	B 4204 S2/B 4204S
	2.0	07.95-08.99	103	B 4204 S

CL137

SAE

OEM-No.
RENAULT 77 00 863 021
VOLVO 70863021
70863021-5

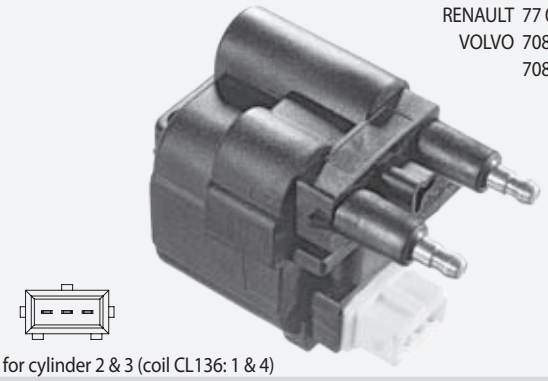

for cylinder 2 & 3 (coil CL136: 1 & 4)

RENAULT				
Laguna I (B56_, 556_)	2.0	06.95-02.01	103	N7Q 700/N7Q 704
	2.0 16V	06.95-03.01	102	N7Q 700/N7Q 704
Laguna I Grandtour	2.0 16V	09.95-03.01	102	N7Q 700/N7Q 704
Safrane II (B54_)	2.0 16V	07.96-12.00	100	N7Q 710/N7Q 711
VOLVO				
S40 I (VS)	1.6	09.95-08.99	77	B 4164 S
	1.6	03.99-12.03	80	B 4164 S2
	1.8	07.95-08.99	85	B 4184 S3/B 4184S
	1.8	03.99-12.03	90	B 4184 S2/B 4184S9
	1.8 i	06.01-12.03	90	B 4184 SJ
	1.8 i	03.98-12.03	92	B 4184 SM
	2.0	07.95-12.03	100	B 4204 S2/B 4204S
	2.0	07.95-08.99	103	B 4204 S
V40 Combi (VW)	1.6	12.95-08.99	77	B 4164 S
	1.6	03.99-06.04	80	B 4164 S2
	1.8	07.95-08.99	85	B 4184 S3/B 4184S
	1.8	03.99-06.04	90	B 4184 S2/B 4184S9
	1.8 i	03.98-06.04	92	B 4184 SM

< CL137

VOLVO				
V40 Combi (VW)	2.0	07.95-06.04	100	B 4204 S2/B 4204S
	2.0	07.95-08.99	103	B 4204 S

CL138

OEM-No.
PSA 5970.87
5970.A0

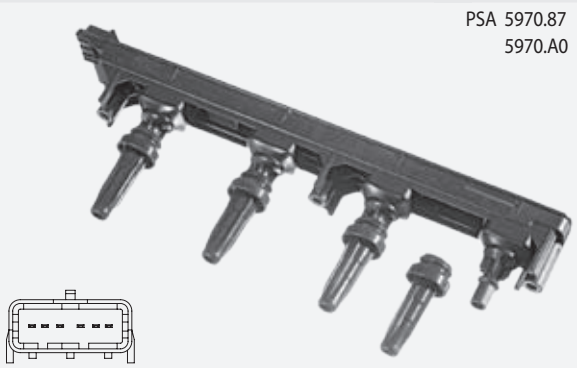

CITROEN				
C4 Grand Picasso I	1.8 i 16V	10.06-	92	6FY (EW7A)
	2.0 i 16V	10.06-	103	RFJ (EW10A)
C4 I (LC_)	2.0 16V	11.04-07.11	103	RFJ (EW10A)
C4 Picasso I (UD_)	1.8 i 16V	02.07-12.11	92	6FY (EW7A)
	2.0 i 16V	02.07-08.13	103	RFJ (EW10A)
C5 I (DC_)	2.0 16V	03.01-08.04	100	RFN (EW10J4)
C5 I Break (DE_)	2.0 16V	06.01-08.04	100	RFN (EW10J4)
C5 II (RC_)	1.8 16V	09.05-	92	6FY (EW7A)
	2.0 16V	09.04-	103	RFJ (EW10A)
C5 II Break (RE_)	1.8 16V	09.05-	92	6FY (EW7A)
	2.0 16V	09.04-	103	RFJ (EW10A)
C5 III (RD_)	1.8 16V	02.08-	92	6FY (EW7A)
	2.0 16V	02.08-	103	RFJ (EW10A)
C5 III Break (TD_)	1.8 16V	02.08-	92	6FY (EW7A)
	2.0 16V	02.08-	103	RFJ (EW10A)
C8 (EA_, EB_)	2.0 16V	09.05-	103	RFJ (EW10A)
Jumpy	2.0 i	01.07-	103	RFH (EW10A)
Jumpy Van	2.0 i	01.07-	103	RFH (EW10A)
PEUGEOT				
307 (3A/C)	2.0 16V	03.05-	103	RFJ (EW10A)
307 Break (3E)	2.0 16V	03.05-	103	RFJ (EW10A)
307 CC (3B)	2.0 16V	03.05-	103	RFJ (EW10A)
307 SW (3H)	2.0 16V	03.05-	103	RFJ (EW10A)
407 (6D_)	1.8 16V	09.05-	92	6FY (EW7A)
	2.0 16V	09.05-	103	RFJ (EW10A)
	2.0 Bioflex	09.07-	103	RFJ (EW10A)
407 SW (6E_)	1.8 16V	09.05-	92	6FY (EW7A)
	2.0 16V	09.05-	103	RFJ (EW10A)
807 (E)	2.0 16V	09.05-	103	RFJ (EW10A)
Expert Tepee (VF_)	2.0 16V	01.07-	103	RFJ/RFH
Expert Van (VF_)	2.0 16V	01.07-	103	RFJ/RFH

CL139

OEM-No.
PSA 5970 92

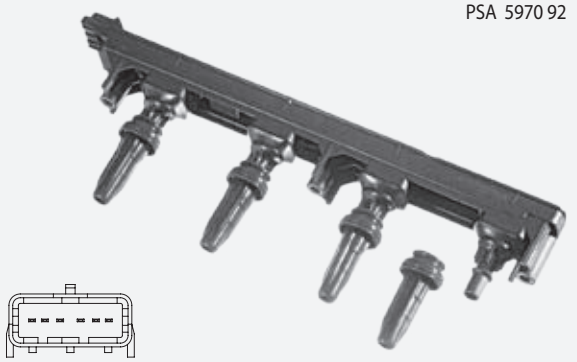

CITROEN				
C8 (EA_, EB_)	2.2	07.02-	116	3FZ (EW12J4)

< CL139

PEUGEOT				
407 (6D_)	2.2	05.04-	116	3FZ (EW12J4)
607 (9D, 9U)	2.2 16V	02.00-	116	3FZ (EW12J4)
807 (E)	2.2	06.02-	116	3FZ (EW12J4)

CL140

PIN

OEM-No.
PSA 5970.57

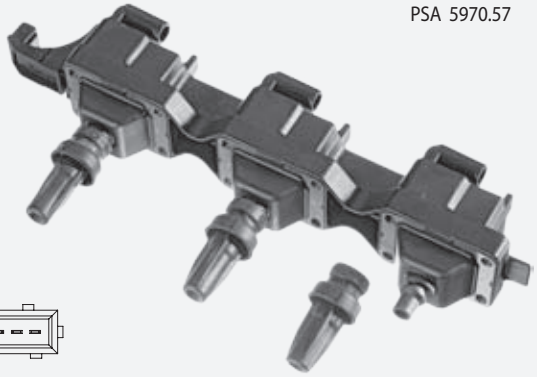

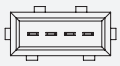

1 coil per vehicle (coil for 3 cylinders and ignition leads for 3 cylinders)

CITROEN				
Xantia (X1)	3.0 i 24V	01.97-01.98	140	XFZ (ES9J4)
Xantia (X2)	3.0 V6	01.98-04.03	140	XFZ (ES9J4)
Xantia Break (X2)	3.0 V6	01.98-04.03	140	XFZ (ES9J4)
XM (Y4)	3.0 V6	04.97-10.00	140	XFZ (ES9J4)
XM Break (Y4)	3.0 V6	04.97-10.00	140	XFZ (ES9J4)
PEUGEOT				
406 (8B)	3.0 24V	10.96-05.04	140	XFZ (ES9J4)
406 Break (8E/F)	3.0 24V	10.96-10.04	140	XFZ (ES9J4)
406 Coupe (8C)	3.0 V6 24V	03.97-12.04	140	XFZ (ES9J4)
605 (6B)	3.0 V6	04.97-09.99	140	XFZ (ES9J4)
RENAULT				
Laguna I (B56_, 556_)	3.0 24V	03.97-03.01	140	L7X 700/L7X 701
Laguna I Grandtour	3.0 24V	03.97-03.01	140	L7X 700/L7X 701
Safrane II (B54_)	2.9 24V	03.99-12.00	140	L7X 713

CL141

OEM-No.
PSA 5970.81

CITROEN				
Saxo (S0, S1)	1.6	02.96-04.04	88	NFX (TU5JP4)
	1.6 VTS	06.96-09.03	87	NFX (TU5JP4)
PEUGEOT				
106 II (1)	1.6 S16	05.96-	87	NFX (TU5J4)

CL146

DIN

OEM-No.
RENAULT 77 01 021 954
77 01 029 799

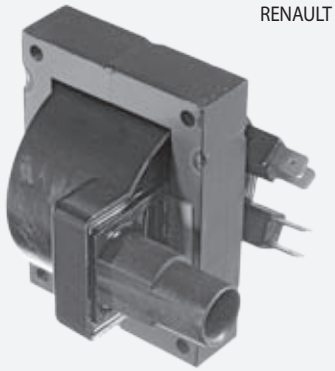

RENAULT				
9 (L42_)	1.2	09.85-12.88	40	C1G 700/C1G 710
	1.4	12.81-12.88	44	C1J 715/_792/_796
	1.4	09.81-12.85	53	C2J 717/C2J 755
	1.4 Automatic	09.81-12.85	50	C2J 757/C2J 718
	1.4 Turbo	04.84-12.86	77	C1J 764/C1J 760
	1.4 Turbo	12.86-12.89	85	C1J 764/C1J 760
11 (B/C37_)	1.2	10.84-12.88	40	C1G 700/C1G 710
	1.4	03.83-12.88	49	C2J 766/_720/_768
	1.4	03.83-12.85	50	C2J 757/C2J 718
	1.4	05.83-12.85	53	C2J 717
18 (134_)	1.4	04.78-07.86	47	847 720/847 722
	1.6	04.82-07.86	54	841 717/A2M 723
	1.6	04.78-09.82	58	841 725/841 726
	1.6 TS	05.82-07.86	71	A6M 725/A6M 726
	1.6 Turbo	10.82-07.86	92	A5L 718/A5L 717
	2.0	05.82-07.86	77	J6R 716
18 Variable (135_)	1.4	05.79-07.86	47	847 720/847 722
	1.6	01.82-07.86	54	841 717/A2M 723
	1.6	05.79-09.82	58	841 725/841 726
	1.6 4x4	01.83-07.86	54	841 717/A2M 723
	1.6 4x4	02.79-06.81	58	841 725
	1.6 TS	05.82-07.86	71	A6M 725/A6M 726
	1.6 Turbo	10.82-07.86	92	A5L 718/A5L 717
	2.0	10.81-07.86	77	J6R 716
	2.0 4x4	05.83-12.86	76	J6R 714/J6R 716
21 (B48_)	1.7	09.89-10.92	54	F3N 726
Fuego (136_)	2.0 TX/GTX	10.80-10.85	81	J6R
Master I Bus (T__)	28-35 2.0	10.86-07.98	58	J5R 718
Master I Flatbed (P__)	2.0	11.89-07.93	60	J5R 718
	28-35 2.0	10.86-07.98	58	J5R 728
Master I Van (T__)	28-35 2.0	10.86-07.98	58	J5R 718
Trafic Flatbed (P6)	2.0	03.80-12.86	63	829 721/829 720
	2.0 4x4	05.85-02.89	60	J5R 716

CL149

OEM-No.
RENAULT 8200051128
8200360911
8200702693
8200713680
8200734204

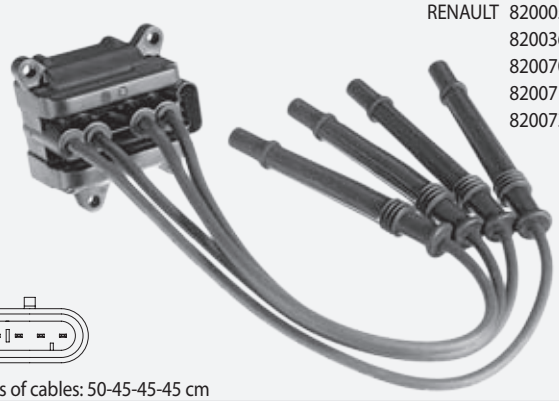

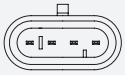

lengths of cables: 50-45-45-45 cm

RENAULT				
Clio Grandtour (KR)	1.2 16V Hi-Flex	07.08-	55	D4F 740
Clio II	1.2 16V	06.07-	55	D4F 728_714/_706
Clio III (BR, CR1)	1.2 16V	06.05-05.08	48	D4F 740
	1.2 16V	06.05-05.08	55	D4F 740

CL149 ▶

< CL149

RENAULT				
Clio III (BR, CR1)	1.2 16V	06.05-05.08	58	D4F 764
	1.2 16V Hi-Flex	07.08-	55	D4F 740/D4F 742
Kangoo (KC)	1.2 16V	06.07-	55	D4F 714/_716/_712
Kangoo Express (FC)	1.2 16V	06.07-	55	D4F 714/_712/_730
Modus / Grand Modus	1.2	01.08-	55	D4F 740
	1.2 16V Hi-Flex	10.08-	55	D4F 740
Twingo I (C06_)	1.2 16V	08.04-06.07	44	D4F 708
Twingo II (CN0_)	1.2 16V	03.07-	56	D4F 772

CL150

PIN

OEM-No.
RENAULT 8200702693

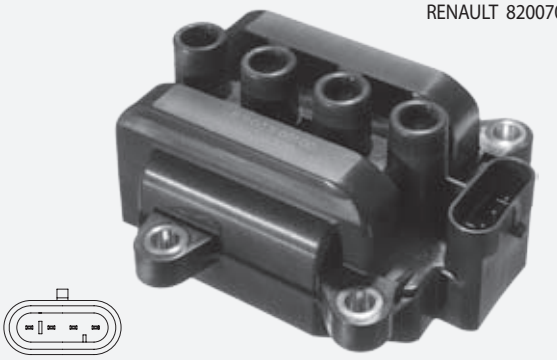

DACIA				
Logan (LS_)	1.2 16V	02.06-	55	D4F 732
Logan II	1.2	05.15-	54	
	1.2	10.12-	55	D4F 732
	1.2 LPG	10.12-	55	D4F 734
Logan MCV II	1.2	05.15-	54	
	1.2	02.13-	55	D4F 732
	1.2 LPG	02.13-	55	D4F 734
Sandero	1.2 16V	11.08-	55	D4F 732
	1.2 16V LPG	11.08-	55	D4F 732
Sandero II	1.2	05.15-	54	
	1.2	10.12-	55	D4F 732
	1.2 LPG	10.12-	55	
RENAULT				
Clio Grandtour (KR)	1.2 16V Hi-Flex	07.08-	55	D4F 740
	1.2 16V	02.08-	55	D4F 740
	1.2 16V	02.08-	58	D4F 764
	1.2 16V	02.08-	74	D4F 784
Clio Grandtour IV	1.2 16V	01.13-	54	D4F 740
Clio II	1.2 16V	06.01-	55	D4F 728/_714/_706
Clio III (BR, CR)	1.2 16V	06.08-	48	D4F 740
	1.2 16V	06.08-	55	D4F 740
	1.2 16V	06.08-	58	D4F 764
	1.2 16V	05.07-	74	D4F 784
	1.2 16V Hi-Flex	07.08-	55	D4F 740/D4F 742
Kangoo (KC)	1.2 16V	06.01-	55	D4F 714/_716/_712
Kangoo Express (FC)	1.2 16V	10.01-	55	D4F 714/_712/_730
Modus / Grand Modus	1.2	01.09-	55	D4F 740
	1.2	01.09-	58	D4F 764
	1.2 16V Hi-Flex	10.08-	55	D4F 740
Twingo I (C06_)	1.2 16V	08.04-06.07	44	D4F 708
	1.2 16V	01.01-	55	D4F 702
Twingo II (CN0_)	1.2 16V	03.07-	56	D4F 772

CL151

OEM-No.
PSA 5970.85
9651710680

CITROEN				
C2 (JM_)	1.4 16V	06.06-	65	KFU (ET3J4)
C3 I (FC_)	1.4 16V	12.03-	65	KFU (ET3J4)
C4 Coupe (LA_)	1.4 16V	11.04-07.11	65	KFU (ET3J4)
C4 I (LC_)	1.4 16V	11.04-07.11	65	KFU (ET3J4)
PEUGEOT				
1007 (KM_)	1.4 16V	10.05-	65	KFU (ET3J4)
206 CC (2A/C)	1.4 16V	10.03-	65	KFU (ET3J4)
206 SW (2E/K)	1.4 16V	10.03-	65	KFU (ET3J4)
207 (WA_, WC_)	1.4 16V	02.06-	65	KFU (ET3J4)
307 (3A/C)	1.4 16V	11.03-	65	KFU (ET3J4)
307 Break (3E)	1.4 16V	11.03-	65	KFU (ET3J4)
307 SW (3H)	1.4 16V	11.03-	65	KFU (ET3J4)

CL152

OEM-No.
RENAULT 224337085R
8200726341
8200959964

1 coil per cylinder

RENAULT				
Grand Scénic III (JZ)	1.4 16V	02.09-	96	H4J 700
Megane CC (EZ0/1_)	1.4 TCe	06.10-	96	H4J 700
Megane III CC (BZ0_)	1.4 TCe	04.09-	96	H4J 700
Megane III Coupe	1.4 TCe	04.09-	96	H4J 700
Megane III Grandtour	1.4 TCe	05.09-	96	H4J 700
Scénic III (JZ)	1.4 16V	02.09-	96	H4J 700

CL153

OEM-No.
RENAULT 8200699627

1 coil per cylinder

RENAULT				
Fluence (L30_)	2.0 16V	02.10-	103	M4R 751/M4R 714
Grand Scénic III (JZ)	2.0 16V	02.09-	103	M4R 711
Laguna III (BT0/1)	2.0 16V	10.07-	103	M4R 704
	2.0 16V Hi-Flex	10.07-	103	M4R 726
Laguna III Grandtour	2.0 16V	10.07-	103	M4R 704
	2.0 16V Hi-Flex	10.07-	103	M4R 704/M4R 726
Latitude (L70_)	2.0 16V	02.11-	103	M4R 746

< CL153

RENAULT				
Megane CC (EZ0/1_)	2.0 CVT	06.10-	103	M4R 713/M4R 711
Megane III CC (BZ0_)	2.0 CVT	02.09-	103	M4R 713/M4R 711
Megane III Coupe	2.0 CVT	05.09-	103	M4R 711
Megane III Grandtour	2.0 CVT	05.09-	103	M4R 711/M4R F713
Scénic III (JZ)	2.0 16V	02.09-	103	M4R 711/M4R 710

CL154

OEM-No.
PSA 5970.95
9644190980

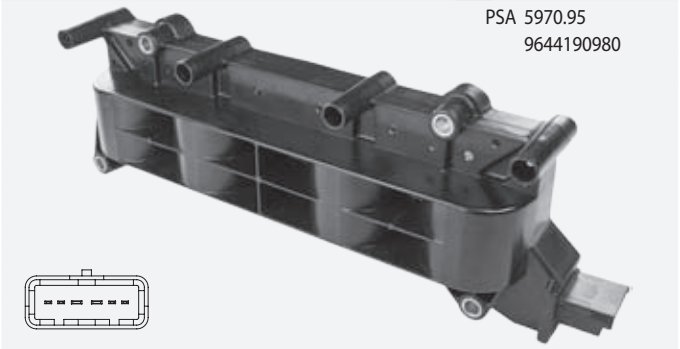

PEUGEOT				
406 (8B)	2.0 16V HPi	05.01-05.04	103	RLZ (EW10D)
406 Break (8E/F)	2.0 16V HPi	05.01-10.04	103	RLZ (EW10D)

CL155

OEM-No.
DACIA 224332428R
RENAULT 224332428R
8201154128

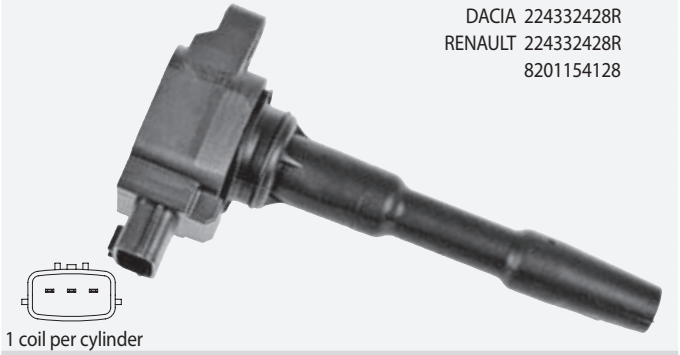

1 coil per cylinder

DACIA				
Dokker	1.2 TCe	11.12-	85	H5F 402
Dokker Express	1.2 TCe 115	12.12-	84	H5F 402
Duster	1.2 TCe 125	10.13-	92	H5F 404
Lodgy	1.2 TCe	03.12-	85	H5F 402
Logan II	0.9 TCe 90	10.12-	66	H4B 400
Logan MCV II	0.9 TCe 90	02.13-	66	H4B 400
Sandero II	0.9 TCe 90	10.12-	66	H4B 400
RENAULT				
Captur	0.9 TCe 90	06.13-	66	
	1.2 TCe 120	06.13-	88	
Clio Grandtour IV	0.9 TCe 90	01.13-	66	
	1.2 TCe 120	03.13-	88	
Clio IV	0.9 TCe 90	11.12-	66	
	1.2 TCe 120	03.13-	88	
Grand Scénic III (JZ)	1.2 TCe	04.12-	85	H5F 400
	1.2 TCe	01.13-	97	H5F 404
Kadjar	1.2 TCe 130	06.15-	96	H5F 408
Kangoo/Grand Kangoo	1.2 TCe 115	07.13-	84	
Kangoo Express (FW)	1.2 TCe 115	07.13-	84	
Megane CC (EZ0/1_)	1.2 TCe	01.13-	97	H5F 404
Megane III CC (BZ0_)	1.2 TCe	03.12-	85	H5F 400
	1.2 TCe	01.13-	97	H5F 404
Megane III Coupe	1.2 TCe	03.12-	85	H5F 400
	1.2 TCe	01.13-	97	H5F 404
Megane III Grandtour	1.2 TCe	03.12-	85	H5F 400
	1.2 TCe	01.13-	97	H5F 404
Scénic III (JZ)	1.2 TCe	04.12-	85	H5F 400
	1.2 TCe	01.13-	97	H5F 404
Twingo III	0.9 TCe 90	09.14-	66	H4B 401
	1.0 SCe 70	09.14-	52	H4D 400

CL156

OEM-No.
PSA 9800251580

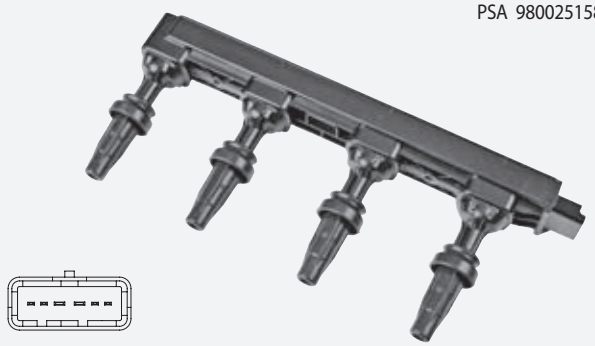

CITROEN				
C-Elysee	1.6 VTi 115	11.12-	85	NFP (EC5)
PEUGEOT				
301	1.6 VTi 115	11.12-	85	NFP (EC5)
308 II	1.6 VTi	03.14-	85	
308 SW II	1.6 VTi	03.14-	85	

CL157

OEM-No.
PSA 9671214580

1 coil per cylinder

CITROEN				
C1 II	1.2 VTi 82	04.14-	60	HMT (EB2D)
C3 II	1.0 VTi 68	08.12-	50	ZMZ (EB0)
	1.2 VTi 82	06.12-	60	HMZ (EB2F)
C4 Cactus	1.2 VTi 75	09.14-	55	HMU (EB2D)
	1.2 VTi 82	09.14-	60	HMZ (EB2F)
C-Elysee	1.2 VTi 72	11.12-	53	HMY (EB2M)
DS3	1.2 VTi 82	01.13-	60	HMZ (EB2F)
	1.2 VTi 110	10.14-	81	HNZ (EB2DT)
DS3 Cabriolet	1.2 VTi 82	01.13-	60	HMZ (EB2F)
	1.2 VTi 110	10.14-	81	HNZ (EB2DT)
PEUGEOT				
108	1.2	05.14-	60	HMT (EB2D)
208	1.0	03.12-	50	ZMZ (EB0)
	1.2	03.12-	60	HMZ (EB2F)
2008	1.2 VTi	03.13-	60	HMZ (EB2F)
301	1.2 VTi 72	11.12-	53	HMY (EB2M)
308 II	1.2 VTi 72	09.13-	60	HMZ (EB2F)

CL158

OEM-No.
PSA 9675390980

1 coil per cylinder

CITROEN				
C3 Picasso	1.2 THP 110	01.15-	81	HNZ (EB2DT)
C4 Cactus	1.2 THP 110	09.14-	81	HNZ (EB2DT)
C4 Grand Picasso II	1.2 THP 130	04.14-	96	HNY (EB2DTS)
C4 II (B7)	1.2 THP 130	04.14-	96	HNY (EB2DTS)
C4 Picasso II	1.2 THP 130	04.14-	96	HNY (EB2DTS)

CL158 ▶

< CL158

PEUGEOT				
208	1.2 THP	01.13-	81	HNZ (EB2DT)
2008	1.2 THP 110	01.15-	81	HNZ (EB2DT)
	1.2 THP 130	01.15-	96	HNY (EB2DTS)
308 II	1.2 THP 130	11.13-	96	HNY (EB2DTS)
308 SW II	1.2 THP 110	03.14-	81	HNZ (EB2DT)
	1.2 THP 130	03.14-	96	HNY (EB2DTS)

CL200

PIN

OEM-No.

OPEL 10 457 075
11 03 872
11 03 905
12 08 063

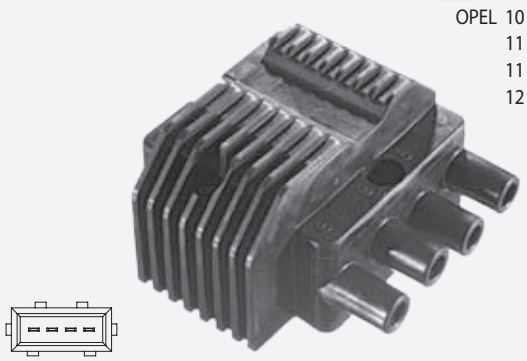

FIAT				
Punto (176)	1.6	01.94-04.97	65	176 A9.000
Punto Cabriolet	90 1.6	04.94-04.97	65	176 A9.000
OPEL (VAUXHALL)				
Astra F (56_, 57_)	1.4	11.94-09.98	60	14 SE
	1.4 i 16V	02.96-09.98	66	X14 XE
	1.4 Si	11.94-09.98	60	C14 SE
	1.6 i	05.93-07.96	52	X16 SZ
	1.6 i	03.92-09.98	55	X16 SZR
	1.6 i 16V	08.94-09.98	74	X16 XEL
	1.6 Si	05.92-12.94	74	C16 SE
Astra F Cabriolet	1.4 i 16V	01.96-03.01	66	X14 XE
	1.4 Si	11.94-03.01	60	C14 SE
	1.6 i	03.93-08.96	52	X16 SZ
	1.6 i	01.96-03.01	55	X16 SZR
Astra F Caravan	1.4	09.92-01.98	60	14 SE
	1.4 i 16V	02.96-01.98	66	X14 XE
	1.4 Si	11.94-01.98	60	C14 SE
	1.6	09.95-01.98	55	16 LZ2/16 NZR
	1.6 i	05.93-07.96	52	X16 SZ
	1.6 i	09.91-01.98	55	X16 SZR
	1.6 i 16V	08.94-01.98	74	X16 XEL
	1.6 Si	03.92-12.94	74	C16 SE
Astra F CC	1.4	09.92-01.98	60	14 SE
	1.4 i 16V	01.96-01.98	66	X14 XE
	1.4 Si	03.92-01.98	60	C14 SE
	1.6 i	05.93-07.96	52	X16 SZ
	1.6 i	09.91-01.98	55	X16 SZR
	1.6 i 16V	08.94-01.98	74	X16 XEL
	1.6 Si	03.92-12.94	74	C16 SE
Astra F Clas. Caravan	1.6 i	01.98-01.05	55	X16 SZR
	1.6 i 16V	01.98-01.05	74	X16 XEL
Astra F Classic CC	1.6 i	01.98-08.02	55	X16 SZR
	1.6 i 16V	01.98-08.02	74	X16 XEL
Astra F Classic Sedan	1.6 i	01.98-08.02	55	X16 SZR
	1.6 i 16V	01.98-08.02	74	X16 XEL
Astra F Van (55_)	1.6 i	02.93-07.96	52	X16 SZ
Astra G Caravan	1.4 16V	06.98-07.04	66	X14 XE/Z14 XE
	1.6	02.98-09.00	55	X16 SZR
Astra G CC	1.4 16V	02.98-01.05	66	X14 XE/Z14 XE
	1.6	02.98-09.00	55	X16 SZR
Astra G Sedan (F69_)	1.4 16V	09.98-01.05	66	X14 XE/Z14 XE
	1.6	09.98-09.00	55	X16 SZR
Astra G Van (F70)	1.6	01.99-09.00	55	X16 SZR
Combo (71_)	1.4	07.94-10.01	60	C14 SE
Corsa A CC	1.4 Si	09.91-03.93	60	C14 SE
	1.6 GSI	09.89-03.93	72	C16 SEI
	1.6 GSI cat	02.92-03.93	74	C16 SE

< CL200

OPEL (VAUXHALL)				
Corsa B	1.2 i	03.93-09.00	33	X12 SZ
	1.4 i	03.93-09.00	44	X14 SZ
	1.4 i 16V	08.97-09.00	63	C14 SEL
	1.4 i 16V	09.94-09.00	66	X14 XE
	1.4 i 16V	09.94-09.00	67	X14 XE
	1.4 Si	03.93-09.00	60	C14 SE
	1.6 GSI 16V	03.93-09.00	80	C16 XE
	1.6 i 16V	08.97-09.00	74	C16 SEL
	1.6 i 16V	09.94-09.00	78	X16 XE
Corsa B Van (73_)	1.4 i	08.99-09.00	44	C14 NZ/X14 SZ
Tigra (95_)	1.4 16V	08.97-12.00	63	X14 XE
	1.4 16V	07.94-12.00	66	X14 XE
	1.6 16V	08.97-08.98	74	C16 SEL
	1.6 16V	07.94-08.98	78	X16 XE
Vectra A (86_, 87_)	1.6 i	09.93-11.95	52	X16 SZ
Vectra A CC	1.6 i	09.93-11.95	52	X16 SZ
Vectra B (36_)	1.6 i	10.95-04.02	55	X16 SZR
	1.6 i 16V	10.95-04.02	74	Z16 XE/X16 XEL
Vectra B Caravan	1.6 i	11.96-06.00	55	X16 SZR
	1.6 i 16V	11.96-07.02	74	Z16 XE/X16 XEL
Vectra B CC (38_)	1.6 i	10.95-07.03	55	X16 SZR
	1.6 i 16V	10.95-07.02	74	Z16 XE/X16 XEL
Zafira A (F75_)	1.6 16V	04.99-06.05	74	X16 XEL

CL201

PIN

OEM-No.

DAEWOO 96350585
GM 01104038
10450424
10490192
OPEL 12 08 051

CHEVROLET				
Lanos Sedan	1.5	11.05-	63	A15SMS
DAEWOO				
Lanos (KLAT)	1.4	05.97-	55	A14SMS
	1.5	05.97-	63	A15SMS
	1.6 16V	05.97-	78	A16DMS
Lanos Sedan (KLAT)	1.4	05.97-	55	A14SMS
	1.5	05.97-	63	A15SMS
	1.6 16V	05.97-	78	A16DMS
Leganza (KLAV)	2.0 16V	06.97-12.02	98	X 20 SED
	2.0 16V	07.00-04.04	93	T20SED
	2.2 16V	04.99-12.02	100	T22SED
Nexia Sedan	1.5	07.08-	59	Y15L
Nubira (KLAJ)	1.6 16V	05.97-	78	A16DMS
	2.0 16V	05.97-	98	X 20 SED/Z20L
Nubira Sedan (KLAJ)	1.6 16V	05.97-	78	A16DMS
	1.6 16V	07.00-	76	A16DMS
	2.0 16V	12.00-	93	T20SED
	2.0 16V	05.97-	98	X 20 SED
Nubira Wagon (KLAJ)	1.6 16V	06.97-	66	A16SMS
	1.6 16V	12.00-	76	A16DMS
	1.6 16V	05.97-	78	A16DMS
	2.0 16V	12.00-	93	T20SED
	2.0 16V	05.97-	98	X 20 SED
OPEL (VAUXHALL)				
Frontera B (6B_)	2.2 i	10.98-	100	X 22 SE/Y 22 SE
ZAZ				
Lanos CC	1.4	10.04-	55	A13SM

< CL201

ZAZ

Lanos CC	1.5	10.04-	63	A15SM
	1.6 16V	10.04-	78	A16DMS
Lanos Pick-up	1.4	10.04-	55	A13SM
	1.5	10.04-	63	A15SM
Lanos Sedan	1.4	10.04-	55	A13SM
	1.5	10.04-	63	A15SM
	1.6 16V	10.04-	78	A16DMS

CL202

OEM-No.
OPEL 12 08 307
19 005 212

OPEL (VAUXHALL)

Astra G Cabriolet	1.6 16V	03.01-10.05	74	Z16 XE
Astra G Caravan	1.4 16V	06.98-07.04	66	X14 XE/Z14 XE
	1.6 16V	02.98-07.04	74	Z16 XE/X16 XEL
	1.6 CNG	03.03-07.04	71	Z16 YNG
Astra G CC	1.4 16V	02.98-01.05	66	X14 XE/Z14 XE
	1.6 16V	02.98-01.05	74	Z16 XE/X16 XEL
Astra G Sedan	1.4 16V	09.98-01.05	66	X14 XE/Z14 XE
	1.6 16V	09.98-01.05	74	Z16 XE/X16 XEL
Combo Tour	1.6 CNG	06.06-	69	Z16 YNG
	1.6 CNG	04.05-	71	Z16 YNG
Combo Van/Combi	1.6 CNG 16V	06.06-	69	Z16 YNG
	1.6 CNG 16V	04.05-	71	Z16 YNG
Corsa C (F08, F68)	1.4	09.00-12.09	66	Z14 XE
Meriva	1.6 16V	05.03-01.06	74	Z16 XE
Vectra B (36_)	1.6 i 16V	10.95-04.02	74	Z16 XE/X16 XEL
Vectra B Caravan	1.6 i 16V	11.96-07.02	74	Z16 XE/X16 XEL
Vectra B CC (38_)	1.6 i 16V	10.95-07.02	74	Z16 XE/X16 XEL
Vectra C	1.6 16V	06.04-	74	Z16 XE
Vectra C Caravan	1.6 16V	06.04-	74	Z16 XE
Vectra C GTS	1.6	08.05-	74	Z16 XE
Zafira A (F75_)	1.6 16V	04.99-06.05	74	Z16 XE
	1.6 CNG	09.01-06.05	71	Z16 YNG
Zafira B (A05)	1.6 CNG	01.06-	69	Z16 YNG

CL203

OEM-No.
GM 90536194
OPEL 09 119 567
12 08 008
90 536 194

OPEL (VAUXHALL)

Astra G Cabriolet	1.8 16V	03.01-10.05	92	Z18 XE
Astra G Caravan	1.8 16V	02.98-09.00	85	X18 XE1
	1.8 16V	09.00-07.04	92	Z18 XE
Astra G CC	1.8 16V	02.98-09.00	85	X18 XE1
	1.8 16V	09.00-01.05	92	Z18 XE

< CL203

OPEL (VAUXHALL)

Astra G Coupe	1.8 16V	03.00-10.00	85	X18 XE1
	1.8 16V	09.00-05.05	92	Z18 XE
Astra G Sedan	1.8 16V	09.98-09.00	85	X18 XE1
	1.8 16V	06.00-01.05	92	Z18 XE
Astra H (L48)	1.8	03.04-	92	Z18 XE
Astra H Caravan	1.8	08.04-	92	Z18 XE
Astra H GTC	1.8	03.05-	92	Z18 XE
Astra H TwinTop	1.8	09.05-	92	Z18 XE
Corsa C (F08, F68)	1.8	09.00-12.09	92	Z18 XE
Meriva	1.8	05.03-05.10	92	Z18 XE
Signum	1.8	05.03-	90	Z18 XE
Tigra TwinTop	1.8	06.04-	92	Z18 XE
Vectra B (36_)	1.8 i 16V	10.95-09.00	85	X18 XE1
	1.8 i 16V	09.00-04.02	92	Z18 XE
Vectra B Caravan	1.8 i 16V	11.96-09.00	85	X18 XE1
	1.8 i 16V	09.00-07.03	92	Z18 XE
Vectra B CC (38_)	1.8 i 16V	10.95-09.00	85	X18 XE1
	1.8 i 16V	09.00-07.03	92	Z18 XE
Vectra C	1.8	04.02-	81	Z18 XEL
	1.8 16V	04.02-	90	Z18 XE
Vectra C Caravan	1.8	10.03-	90	Z18 XE
Vectra C GTS	1.8 16V	08.02-	90	Z18 XE
Zafira A (F75_)	1.8 16V	04.99-09.00	85	X18 XE1
	1.8 16V	09.00-06.05	92	Z18 XE

SAAB

9-3 (YS3F)	1.8 i	01.04-	90	Z18 XE
9-3 Combi (YS3F)	1.8 i	03.05-	90	Z18 XE

CL204

DIN
OEM-No.
DAEWOO 96320818
96336522

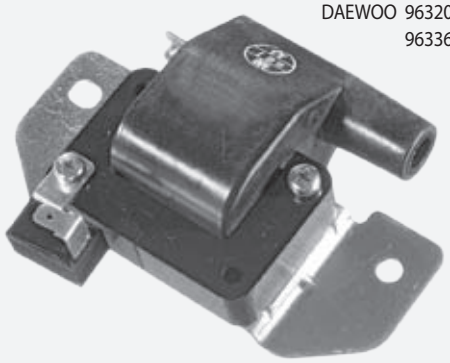

DAEWOO

Matiz (KLYA)	0.8	09.98-12.01	38	F8CV

CL205

SAE
OEM-No.
OPEL 12 08 002
12 08 004
12 08 048
90 449 740
90 510 387

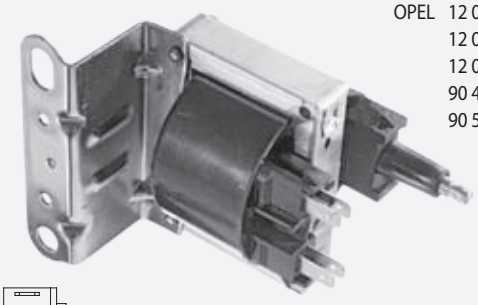

OPEL (VAUXHALL)

Ascona C	1.3 N	09.81-08.86	44	13 N
	1.3 S	09.81-08.88	55	13 S
	1.6	09.81-09.87	55	16 N
	1.6 i	09.87-08.88	55	E 16 NZ/E 16 LZ
	1.6 i cat	09.86-08.88	55	C16 NZ/C16 LZ
Ascona C CC	1.3 S	09.81-08.88	55	13 S
	1.6	09.81-08.88	55	16 N
	1.6 i	09.87-08.88	55	E 16 NZ

CL205 ▶

< CL205

OPEL (VAUXHALL)

Ascona C CC	1.6 i cat	09.86-08.88	55	C16 NZ/C16 LZ
Astra F (56_, 57_)	1.6 i	03.92-09.98	55	C16 NZ
Astra F Caravan	1.6 i	09.91-01.98	55	C16 NZ/X16 SZR
Astra F CC	1.6 i	09.91-01.98	55	C16 NZ
Astra F Van (55_)	1.6 i	10.91-04.93	55	C16 NZ
Corsa A CC	1.2 N	01.90-03.93	38	12 NV
	1.2 S	09.82-02.90	40	12 ST
	1.3 GL	09.82-03.93	55	13 S
	1.3 S	09.82-10.89	51	13 SB
	1.6 GSI	05.88-03.92	74	E 16 SE
Corsa A TR	1.0	09.82-09.92	33	10 S
	1.2 S	09.82-03.93	40	12 ST
	1.2 S	09.82-10.87	43	12 S
	1.3 GL	09.82-03.93	55	13 S
	1.3 S	09.82-10.87	51	13 SB
Corsa A Van	1.0	02.86-04.89	33	10 S
	1.2	02.86-04.89	40	12 ST
	1.2	02.86-07.90	44	12 S
	1.3	02.86-04.89	51	13 SB
Kadett D	1.3 N	08.79-08.84	44	13 N
	1.3 S	08.79-08.84	55	13 S
Kadett D Caravan	1.3 N	08.79-08.84	44	13 N
	1.3 S	08.79-08.84	55	13 S
Kadett E (39_, 49_)	1.3 i cat	09.85-08.91	44	C13 N
	1.3 S	09.84-08.87	55	13 S
	1.6 i	09.86-08.91	55	E 16 NZ
	1.6 i cat	09.86-08.91	55	C16 NZ/C16 LZ
Kadett E Cabriolet	1.3 S	03.87-02.93	55	13 S
	1.6 i	10.86-02.93	55	E 16 NZ
	1.6 i	07.89-02.93	60	16 SV
	1.6 i cat	10.87-02.93	55	C16 NZ/C16 LZ
Kadett E Caravan	1.6 i cat	09.86-08.91	55	C16 NZ/C16 LZ
Kadett E CC	1.3 N	09.84-08.91	44	13 NB/13 N
	1.3 S	09.84-08.87	55	13 S
	1.6 i	09.86-08.91	55	E 16 NZ
	1.6 i cat	09.86-08.91	55	C16 NZ/C16 LZ
Kadett E Combo	1.3 N	01.86-12.89	44	13 N
	1.3 S	01.86-12.89	55	13 S
	1.4 i	08.91-07.94	44	C14 NZ
	1.6 i	08.91-07.94	55	C16 NZ
Kadett E Van	1.6 i	08.89-09.93	55	C16 NZ
Manta B (58_, 59_)	1.3 S	08.81-08.86	55	13 S
Manta B CC	1.3 S	08.79-08.86	55	13 S
Monza A (22_)	2.2 E	11.84-08.86	85	22 E
Vectra A (86_, 87_)	1.6	09.88-12.90	60	16 SV
	1.6 i	09.88-11.95	55	C16 NZ/E 16 NZ
Vectra A CC	1.6 i cat	09.88-11.95	55	C16NZ
	1.6 S	09.88-12.90	60	16 SV

CL206

PIN

OEM-No.

OPEL 12 08 003
12 08 054
12 08 070
90 449 739
90 510 386

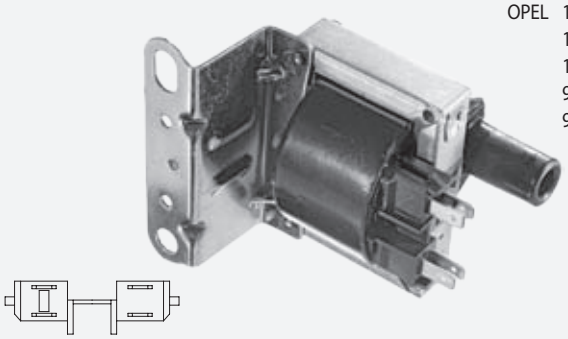

OPEL (VAUXHALL)

Astra F (56_, 57_)	1.4	09.91-09.93	55	14 NV
	1.4	05.93-09.98	60	14 SE
	1.4 i	09.91-09.98	44	C14 NZ/X14 NZ
	1.4 Si	03.92-09.98	60	C14 SE
	1.6	09.95-09.98	55	16 NZR/16 LZ2
	1.8 i	03.92-09.98	66	C18 NZ

< CL206

OPEL (VAUXHALL)

Astra F Cabriolet	1.4 Si	05.93-03.01	60	C14 SE
Astra F Caravan	1.4	09.91-09.93	55	14 NV
	1.4	09.92-01.98	60	14 SE
	1.4 i	09.91-01.98	44	C14 NZ
	1.4 Si	05.93-01.98	60	C14 SE
	1.8 i	09.91-01.98	66	C18 NZ
Astra F CC	1.4	09.91-09.93	55	14 NV
	1.4	09.92-01.98	60	14 SE
	1.4 i	03.92-01.98	44	C14 NZ
	1.4 Si	03.92-01.98	60	C14 SE
	1.6	09.95-01.98	55	16 NZR/16 LZ2
	1.8 i	09.91-01.98	66	C18 NZ
Astra F Clas. Caravan	1.4 i	01.98-01.05	44	X14 NZ
Astra F Classic CC	1.4 i	01.98-08.02	44	X14 NZ
Astra F Classic Sedan	1.4 i	01.98-08.02	44	X14 NZ
Astra F Van (55_)	1.4 i	10.91-01.99	44	C14 NZ
Combo (71_)	1.2	07.94-10.01	33	C12 NZ/X12 SZ
	1.4	07.94-10.01	44	C14 NZ/X14 SZ
Corsa A CC	1.2	09.82-08.90	33	E 12 GV/12 NC
	1.2 i	09.89-03.93	33	C12 NZ
	1.4 i	01.90-03.93	44	C14 NZ
	1.4 S	01.90-03.93	53	14 NV
	1.4 Si	09.91-03.93	60	C14 SE
	1.6 GSI	09.89-03.93	72	C16 SEI
	1.6 GSI	05.88-03.92	74	E 16 SE
	1.6 GSI cat	02.92-03.93	74	C16 SE
Corsa A TR	1.2 i	09.89-03.93	33	C12 NZ
	1.4 i	10.89-03.93	44	C14 NZ
Corsa B	1.2 i	03.93-09.00	33	C12 NZ
	1.2 i	03.93-09.00	33	12 NZ
	1.4 i	03.93-09.00	44	C14 NZ
Kadett E	1.4 i	01.90-08.91	44	C14 NZ
	1.4 S	01.90-08.91	55	14 NV
	1.6 S	09.84-08.86	66	16 SH
	1.8	09.87-08.90	84	18 E
	1.8 i	09.90-08.91	66	C18 NZ
Kadett E Cabriolet	1.4 i	01.90-08.91	44	C14 NZ
	1.4 S	08.90-02.93	55	14 NV
	1.6 i	07.89-02.93	60	16 SV
Kadett E Caravan	1.4 i	01.90-08.91	44	C14 NZ
	1.4 S	01.90-08.91	55	14 NV
	1.6	09.86-08.91	60	16 SV
	1.8 i	06.85-08.91	66	C18 NZ/C18 NT
Kadett E CC	1.4 i	01.90-08.91	44	C14 NZ
	1.4 S	01.90-08.91	55	14 NV
	1.6 S	09.86-08.91	60	16 SV
	1.8 i	06.85-08.91	66	C18 NZ
Kadett E Combo	1.4 i	08.91-07.94	44	C14 NZ
	1.4 S	07.89-08.91	55	14 NV
	1.6	09.86-12.91	60	16 SV
Kadett E Van	1.4 i	01.90-08.91	44	C14 NZ
Omega A	1.8	09.86-03.94	85	18 SEH
	1.8 S	09.86-03.94	66	18 SV
Omega A Caravan	1.8	09.86-03.94	85	18 SEH
	1.8 S	09.86-03.94	66	18 SV
Vectra A (86_, 87_)	1.6	08.92-07.93	51	C16 LZ2
	1.6	01.90-05.93	60	16 SV
	1.6 i	09.93-11.95	55	16 LZ2
	1.8 i cat	03.90-11.95	66	C18 NZ
	1.8 S	09.88-07.89	65	E 18 NVR
	1.8 S	09.89-10.90	66	18 SV
	1.8 S 4x4	01.89-07.89	65	E 18 NVR
Vectra A CC	1.6 i	09.93-11.95	55	16 LZ2
	1.6 i cat	09.88-11.95	55	C16NZ / C16NZ2C
	1.6 S	01.90-05.93	60	16 SV
	1.8 i	09.88-10.90	66	18 SV
	1.8 i cat	03.90-11.95	66	C18 NZ
	1.8 S	09.88-07.89	65	E 18 NVR
Vectra B (36_)	1.6 i	10.95-04.02	55	16 LZ2
Vectra B Caravan	1.6 i	11.96-06.00	55	16 LZ2
Vectra B CC (38_)	1.6 i	10.95-07.03	55	16 LZ2

CL207

PIN

OEM-No.
OPEL 12 08 071
90458250

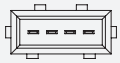

OPEL (VAUXHALL)				
Astra F (56_, 57_)	1.8 i 16V	11.94-09.98	85	C18 XEL/X18 XE
	1.8 i 16V	09.95-08.97	85	C18 SEL
	1.8 i 16V	06.93-10.94	92	C18 XE
	2.0 i 16V	02.95-09.98	100	X 20 XEV
Astra F Cabriolet	1.8 i 16V	11.94-03.01	85	C18 XEL/X18 XE
Astra F Caravan	1.8 i 16V	07.94-01.98	85	C18 XEL/X18 XE
	1.8 i 16V	06.93-01.98	92	C18 XE
	2.0 i 16V	02.95-01.98	100	X 20 XEV
Astra F CC	1.8 i 16V	09.94-01.98	85	C18 XEL/X18 XE
	1.8 i 16V	06.93-08.94	92	C18 XE
	2.0 i 16V	02.95-01.98	100	X 20 XEV
Astra G Caravan	2.0 16V	02.98-07.04	100	X 20 XEV
Astra G CC	2.0 16V	02.98-01.05	100	X 20 XEV/C20 SEL
	2.0 16V OPC	11.99-09.02	118	X 20 XER
Astra G Sedan	2.0 16V	09.98-01.05	100	X 20 XEV
Calibra A (85_)	2.0 i 16V	02.94-07.97	100	X 20 XEV
	2.0 i 16V 4x4	02.94-07.97	100	X 20 XEV
Omega B	2.0 16V	03.94-09.99	100	X 20 XEV
Omega B Caravan	2.0 16V	03.94-09.99	100	X 20 XEV
Vectra A (86_, 87_)	2.0 i 16V	06.94-11.95	100	X 20 XEV
	2.0 i 16V 4x4	06.94-11.95	100	X 20 XEV
Vectra A CC	2.0 i 16V	06.94-11.95	100	X 20 XEV
Vectra B (36_)	1.8 i 16V	10.95-09.00	85	X18 XE1
	1.8 i 16V	10.95-09.00	85	X18 XE
	2.0 i 16V	10.95-09.00	100	X 20 XEV/C20 SEL
Vectra B Caravan	1.8 i 16V	11.96-09.00	85	X18 XE1
	1.8 i 16V	11.96-09.00	85	X18 XE
	2.0 i 16V	11.96-09.00	100	X 20 XEV/C20 SEL
Vectra B CC (38_)	1.8 i 16V	10.95-09.00	85	X18 XE1
	1.8 i 16V	10.95-09.00	85	X18 XE
	2.0 i 16V	10.95-09.00	100	X 20 XEV/C20 SEL
Zafira A (F75_)	1.8 16V	04.99-09.00	85	X18 XE1

CL208

PIN

OEM-No.
OPEL 12 08 053
90 350 021
90 350 987
90 369 434
SAAB 42 26 031
5171111

OPEL (VAUXHALL)				
Astra F Caravan	2.0 i 16V	03.93-01.98	110	C20 XE
Astra F CC	2.0 GSI 16V	09.91-01.98	110	C20 XE
Calibra A (85_)	2.0 i	06.90-07.97	85	C20 NE
	2.0 i 4x4	06.90-07.97	85	C20 NE
	2.0 i 16V	06.90-02.94	110	C20 XE

< CL208

OPEL (VAUXHALL)				
Calibra A (85_)	2.0 i 16V 4x4	06.90-02.94	110	C20 XE
Frontera A	2.4 i	03.92-10.98	92	C24 NE
Frontera A Sport	2.0 i	03.92-10.98	85	C20 NE
Kadett E	1.8 S	09.87-08.91	62	E 18 NV
	2.0 i	03.87-08.91	85	20 NE/20 SE
	2.0 i cat	03.87-08.91	85	C20 NE
Kadett E Cabriolet	2.0 i	10.86-02.93	85	20 NE
	2.0 i cat	10.86-02.93	85	C20 NE
Kadett E Caravan	1.8 S	09.87-08.91	62	E 18 NV
	2.0 i	09.87-08.91	85	20 NE
Kadett E CC	1.8 S	09.87-08.91	62	E 18 NV/S 18 NV
	2.0 GSI	09.86-08.91	85	20 NE
	2.0 GSI	09.86-08.91	95	20 SEH
	2.0 GSI cat	09.86-08.91	85	C20 NE
Omega A	1.8	09.87-03.94	65	E 18 NVR
	1.8 N	09.86-08.87	60	18 NV
	2.0	09.90-03.94	73	C20 NEJ
	2.0	09.90-03.94	74	C20 NEF
	2.0	09.86-03.94	90	20 SE
	2.0 i	09.86-03.94	85	C20 NE
	2.4 i	09.88-03.94	92	C24 NE
	3.0	03.87-12.87	115	C 30 LE
	3.0	03.87-09.90	130	30 NE
	3.0 cat	03.88-03.94	130	C 30 NE
	3.0 24V	09.89-03.94	147	C 30 SEJ
	3.0 24V	09.89-03.94	150	C 30 SE
	3.0 24V Evolution	03.91-07.92	169	C 30 XEI
Omega A Caravan	1.8	09.87-03.94	65	E 18 NVR
	1.8 N	09.86-08.87	60	18 NV
	2.0	09.90-03.94	74	C20 NEF
	2.0	09.86-03.94	90	20 SE
	2.0 i	09.90-03.94	73	C20 NEJ
	2.0 i	09.86-03.94	85	C20 NE
	2.4 i	09.88-03.94	92	C24 NE
	3.0	03.87-03.94	115	C 30 LE
	3.0	03.87-09.90	130	30 NE
	3.0 cat	03.87-03.94	130	C 30 NE
	3.0 24V	09.89-03.94	147	C 30 SEJ
Senator B (29_)	2.5 i	09.90-09.93	103	25 NE
	2.6 i	09.90-09.93	110	C26 NE
	3.0	09.87-09.93	115	C 30 LE
	3.0 24V	09.89-09.93	150	C 30 SE
Vectra A (86_, 87_)	2.0 i	09.88-10.90	85	20 NE
	2.0 i	09.88-09.92	95	20 SEH
	2.0 i cat	09.88-11.95	85	C20 NE
	2.0 i 4x4	01.89-10.90	85	20 NE
	2.0 i 4x4	01.89-09.92	95	20 SEH
	2.0 i 4x4 cat	01.89-11.95	85	C20 NE
	2.0 i Turbo 4x4	06.94-11.95	150	C20 LET
	2000 16V 4x4	01.89-10.90	110	20 XEJ
	2000/GT 16V	01.89-06.94	110	20 XEJ
	2000/GT 16V cat	02.90-11.95	110	C20 XE
	2.0 GT 16V 4x4	02.90-11.95	110	C20 XE
Vectra A CC	2.0	04.88-09.89	74	C20 NEF
	2.0 i	09.88-10.90	85	20 NE
	2.0 i cat	09.88-11.95	85	C20 NE
	2.0 i 16V	02.89-10.90	110	20 XEJ
	2.0 i GT	06.90-11.95	95	20 SEH
SAAB				
900 II	2.0 i	08.94-02.98	96	B204I
	2.3 -16	07.93-02.98	110	B234I
900 II Cabriolet	2.0 i	12.93-02.98	96	B204I
	2.3 -16	12.93-02.98	110	B234I
900 II Coupe	2.0 i	08.94-02.98	96	B204I
	2.0 i	12.93-07.94	98	B206I
	2.3 -16	12.93-02.98	110	B234I
9-3 (YS3D)	2.0 i	02.98-09.02	96	B204I
	2.0 SE Turbo	02.98-09.02	147	B204R
	2.0 Turbo	10.98-09.02	113	B204E
	2.3 i	02.98-09.02	110	B234I
9-3 Cabriolet	2.0 i	02.98-08.03	96	B204I

CL208 ▶

< CL208

SAAB				
9-3 Cabriolet	2.0 SE Turbo	02.98-08.03	147	B204R
	2.0 Turbo	10.98-08.03	113	B204E
	2.0 Turbo	02.98-08.03	136	B205L/B204L
	2.0 Turbo	10.99-08.03	151	B205R
	2.3 i	02.98-08.03	110	B234I

CL209

PIN — OEM-No.

OPEL 12 08 007
90492255
90511450

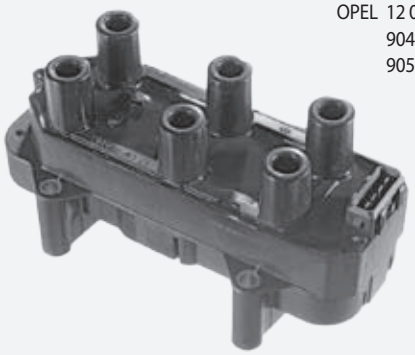

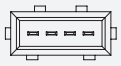

OPEL (VAUXHALL)				
Omega B	2.5 V6	03.94-09.00	125	X 25 XE
	3.0 V6	04.94-02.01	155	X 30 XE
Omega B Caravan	2.5 V6	03.94-09.00	125	X 25 XE
	3.0 V6	04.94-02.01	155	X 30 XE
Vectra B (36_)	2.5 i V6	10.95-09.00	125	X 25 XE
	i 500 2.5	05.98-09.00	143	X 25 XE
Vectra B Caravan	2.5 i V6	11.96-09.00	125	X 25 XE
	i 500 2.5	05.98-09.00	143	X 25 XE
Vectra B CC (38_)	2.5 i V6	10.95-09.00	125	X 25 XE

CL210

PIN — OEM-No.

OPEL 12 08 068
90 358 386
90 444 184
SAAB 4770046

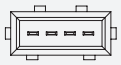

OPEL (VAUXHALL)				
Calibra A (85_)	2.5 i V6	04.93-07.97	125	X 25 XE/C25 XE
Omega B	2.5 V6	03.94-09.00	125	X 25 XE
	3.0 V6	04.94-02.01	155	X 30 XE
Omega B Caravan	2.5 V6	03.94-09.00	125	X 25 XE
	3.0 V6	04.94-02.01	155	X 30 XE
Vectra A (86_, 87_)	2.5 CD 4x4	08.92-08.95	125	C25 XE
	2.5 V6	02.93-11.95	125	C25 XE
Vectra A CC	2.5 V6	02.93-11.95	125	C25 XE
SAAB				
900 II	2.5 -24 V6	07.93-02.98	125	B258I
900 II Cabriolet	2.5 -24 V6	12.93-02.98	125	B258I
900 II Coupe	2.5 -24 V6	12.93-02.98	125	B258I
9000	3.0 -24 V6 CD	07.94-12.98	155	B308I
9000 CC	3.0 -24 V6 CS	07.94-12.98	155	B308I

CL211

SAE — OEM-No.

DAEWOO 01115467
96165049

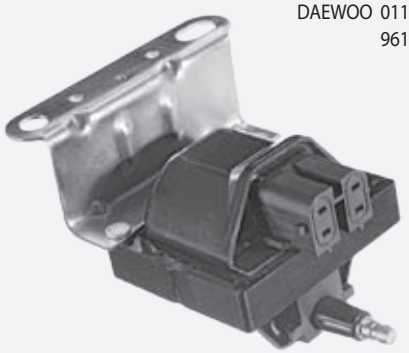

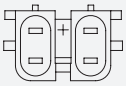

DAEWOO				
Aranos	1.5	01.95-11.97	66	V15L
	1.8	01.95-11.97	70	Y18L
	2.0	01.95-11.97	77	C20LE
Cielo	1.5	04.95-07.97	55	Y15L
Cielo (KLETN)	1.5	08.96-08.97	44	G15MF
	1.5	02.95-08.97	52	G15MF
	1.5	02.95-08.97	55	G15MF
	1.5 16V	02.95-08.97	66	A15MF
Cielo Sedan	1.5	08.96-08.97	44	G15MF
	1.5	02.95-08.97	52	G15MF
	1.5	02.95-08.97	55	G15MF
	1.5 16V	02.95-08.97	66	A15MF
Espero (KLEJ)	1.5 16V	02.95-06.99	66	A15MF
	1.5 16V	10.93-09.94	65	A15MF
	1.8	02.95-09.99	66	C18LE
	1.8	02.95-06.99	70	C18LE
	2.0	02.95-06.99	77	C20LE
	2.0	10.91-09.93	74	C20LZ
	2.0	10.93-09.94	81	C20LE
Nexia Sedan	1.6	07.08-	80	F16D3

CL212

PIN — OEM-No.

OPEL 12 08 010
10457870

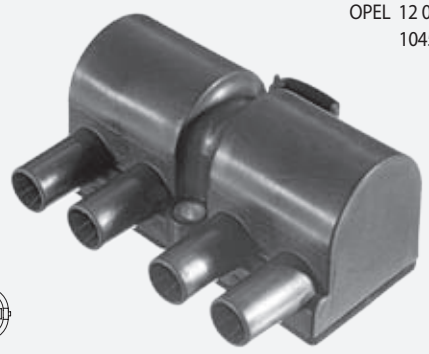

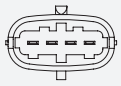

OPEL (VAUXHALL)				
Astra G Caravan	1.6	09.00-07.04	62	Z16 SE
Astra G CC	1.6	09.00-01.05	62	Z16 SE
Astra G Sedan	1.6	09.00-01.05	62	Z16 SE
Astra G Van (F70)	1.6	09.00-04.05	62	Z16 SE
Combo Tour	1.6	10.01-	64	Z16 SE
Combo Van/Combi	1.6	10.01-	64	Z16 SE
Meriva	1.6	05.03-05.10	64	Z16 SE

CL213

OEM-No.
OPEL 12 08 306
90 532 618
90 543 059

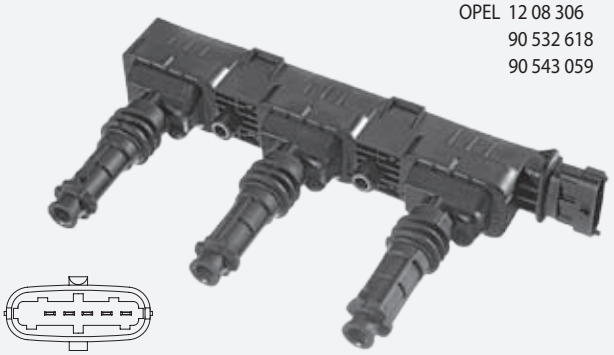

OPEL (VAUXHALL)				
Agila (A) (H00)	1.0 12V	09.00-12.07	43	Z10 XE
Corsa B	1.0 i 12V	11.96-09.00	40	X10 XE
Corsa C (F08, F68)	1.0	09.00-06.03	43	Z10 XE

CL214

OEM-No.
OPEL 12 08 012
90 543 253
90 560 110

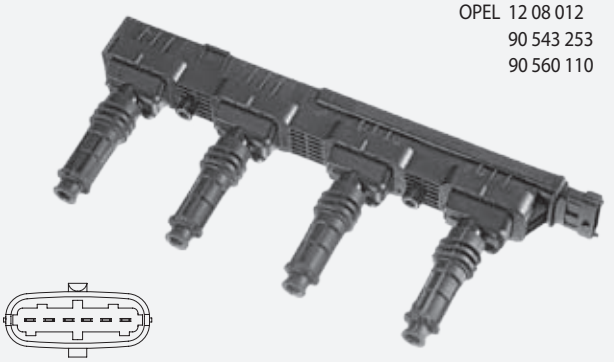

OPEL (VAUXHALL)				
Agila (A) (H00)	1.2 16V	09.00-12.07	55	Z12 XE
Astra G Caravan	1.2 16V	02.98-09.00	48	X12 XE
	1.2 16V	09.00-07.04	55	Z12 XE
Astra G CC	1.2 16V	02.98-09.00	48	X12 XE
	1.2 16V	09.00-01.05	55	Z12 XE
Astra G Sedan	1.2 16V	09.98-09.00	48	X12 XE
	1.2 16V	09.00-01.05	55	Z12 XE
Corsa B	1.2 i 16V	03.98-09.00	48	X12 XE
Corsa C	1.2	09.00-12.09	55	Z12 XE
Corsa C Van	1.2 16V	09.00-	55	Z12 XE

CL215

OEM-No.
OPEL 12 08 020
24 420 584
93 177 212

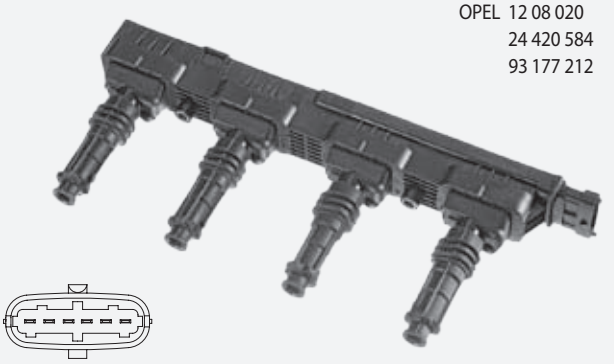

OPEL (VAUXHALL)				
Agila (A) (H00)	1.2 16V Twinport	07.04-12.07	59	Z12 XEP
Astra G Caravan	1.4	09.07-12.09	66	Z14 XEP
Astra G CC	1.4	09.07-12.09	66	Z14 XEP
Astra G Sedan	1.4	09.07-12.09	66	Z14 XEP
Astra H (L48)	1.2	08.05-	59	Z12 XEP
	1.4	03.04-	66	Z14 XEP
Astra H Caravan	1.4	08.04-	55	Z14 XEL

< CL215

OPEL (VAUXHALL)				
Astra H Caravan	1.4	08.04-	66	Z14 XEP
	1.4 LPG	08.09-	66	Z14 XEP
Astra H GTC	1.2	08.05-	59	Z12 XEP
	1.4	03.05-	66	Z14 XEP
Combo Tour	1.4	10.04-	66	Z14 XEP
Combo Van/Combi	1.4 16V	08.05-	66	Z14 XEP
Corsa C	1.2	09.00-12.09	55	Z12 XE
	1.2 Twinport	07.04-12.09	59	Z12 XEP
	1.4 Twinport	06.03-12.09	66	Z14 XEP
Corsa C Van	1.2	07.05-	59	Z12 XEP
	1.2 16V	09.00-	55	Z12 XE
	1.4	08.03-	66	Z14 XEP
Corsa D	1.2	07.06-	59	Z12 XEP
	1.2 LPG	09.09-	59	Z12 XEP
	1.4	07.06-	66	Z14 XEP
	1.4 LPG	07.06-	66	Z14 XEP
Corsa D Van	1.2	06.10-	51	A 12 XEL
	1.2	07.09-	59	Z12 XEP
	1.2	06.10-	63	A 12 XER
Meriva	1.4 16V Twinport	07.04-05.10	66	Z14 XEP
	1.4 16V Twinp. LPG	07.04-05.10	66	Z14 XEP
Tigra TwinTop	1.4	06.04-	66	Z14 XEP

CL216

SAE
OEM-No.
CHEVROLET 96291054
DAEWOO 96291054

CHEVROLET				
Matiz (M200, M250)	0.8	03.05-	38	F8CV
	0.8 LPG	03.05-	38	F8CV
Spark	0.8	05.05-	37	F8CV
	0.8	09.00-12.04	38	F8CV
DAEWOO				
Matiz (KLYA)	0.8	01.02-	38	F8CV

CL217

OEM-No.
OPEL 12 08 028
24 420 622
93 180 806

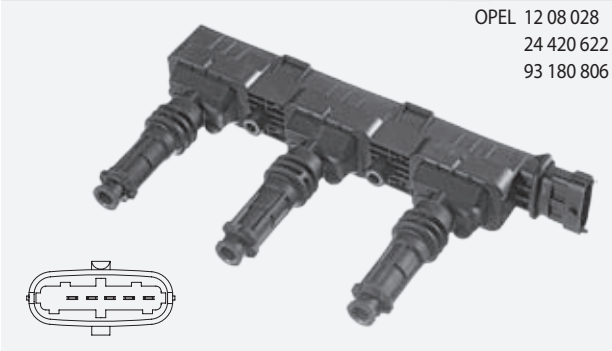

OPEL (VAUXHALL)				
Agila (A) (H00)	1.0	08.03-12.07	44	Z10 XEP
Corsa C	1.0	06.03-12.09	44	Z10 XEP
Corsa D	1.0	07.06-	44	Z10 XEP

CL218

OEM-No.
OPEL 62 35 037
90 424 480
91 98 834

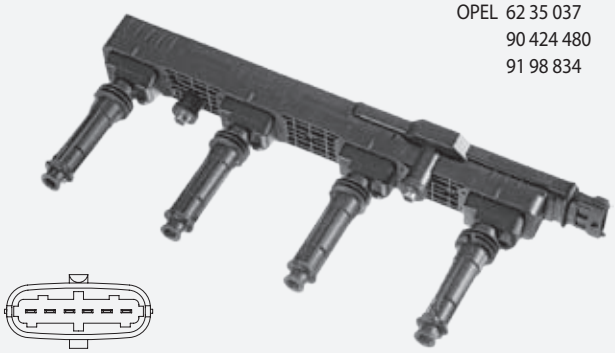

OPEL (VAUXHALL)				
Astra G Cabriolet	2.0 16V Turbo	11.02-10.05	147	Z 20 LET
	2.0 OPC	03.02-10.05	141	Z 20 LET
Astra G Caravan	2.0 OPC	09.02-07.04	141	Z 20 LET
	2.0 OPC	11.02-07.04	147	Z 20 LET
Astra G CC	2.0 OPC	09.02-01.05	141	Z 20 LET
	2.0 OPC	11.02-01.05	147	Z 20 LET
Astra G Coupe	2.0 16V Turbo	09.00-08.01	140	Z 20 LET
	2.0 16V Turbo	08.01-05.05	141	Z 20 LET
	2.0 16V Turbo	11.02-05.05	147	Z 20 LET
Astra H (L48)	2.0 Turbo	03.04-	125	Z 20 LEL
	2.0 Turbo	09.04-	147	Z 20 LER
	2.0 Turbo	03.05-	177	Z 20 LEH
Astra H Caravan	2.0 Turbo	08.04-	125	Z 20 LEL
	2.0 Turbo	09.04-	147	Z 20 LER
Astra H GTC	2.0 Turbo	03.05-	147	Z 20 LER
	2.0 Turbo	03.05-	125	Z 20 LEL
	2.0 Turbo	08.05-	177	Z 20 LEH
Astra H TwinTop	2.0 Turbo	09.05-	125	Z 20 LEL
	2.0 Turbo	09.05-	147	Z 20 LER
Speedster	2.0 Turbo	04.03-	147	Z 20 LET
Zafira A (F75_)	2.0 OPC	09.01-06.05	141	Z 20 LET
	2.0 OPC	11.02-06.05	147	Z 20 LET/Z 20 LER
Zafira B (A05)	2.0	07.05-	147	Z 20 LER
	2.0	01.06-	177	Z 20 LEH

CL219

PIN

OEM-No.
OPEL 12 08 065
90 443 900
90 449 572

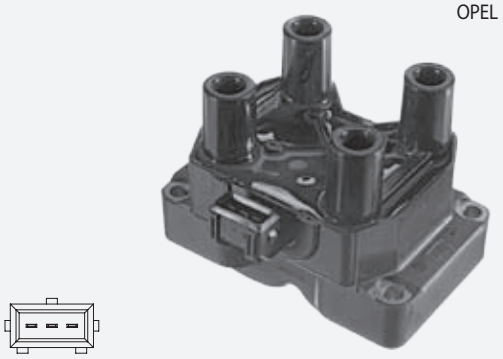

OPEL (VAUXHALL)				
Astra F Caravan	2.0 i 16V	03.93-01.98	110	C20 XE
Astra F CC	2.0 GSI 16V	09.91-01.98	110	C20 XE
Calibra A (85_)	2.0 i 16V	06.90-02.94	110	C20 XE
	2.0 i 16V 4x4	06.90-02.94	110	C20 XE
Frontera A	2.2 i	03.95-10.98	100	X 22 XE
Frontera A Sport	2.0 i	03.92-10.98	85	X 20 SE
Omega B	2.0	03.94-09.99	85	X 20 SE
	2.0	03.94-12.00	85	20 SE
Omega B Caravan	2.0	03.94-09.99	85	X 20 SE
Vectra A	2000/GT 16V cat	02.90-11.95	110	C20 XE
	2.0 GT 16V 4x4	02.90-11.95	110	C20 XE
Vectra A CC	2.0 i 16V cat	02.90-11.95	110	C20 XE
Vectra B (36_)	2.0 i	10.95-04.02	82	20 NEJ
Vectra B Caravan	2.0 i	11.96-02.02	82	20 NEJ

< CL219

OPEL (VAUXHALL)				
Vectra B CC (38_)	2.0 i	10.95-02.02	82	20 NEJ

CL220

PIN

OEM-No.
CHEVROLET 96253555
DAEWOO 93363483
96253555
96566260

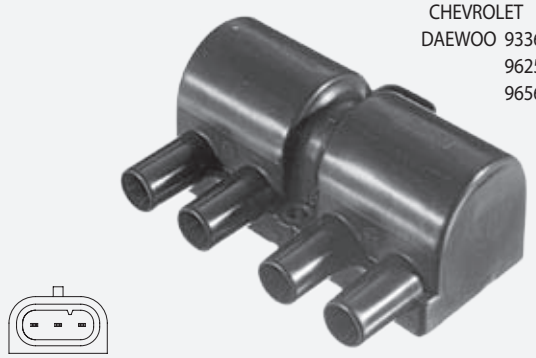

CHEVROLET				
Aveo CC (T250, T255)	1.2	10.08-	53	F12S3
	1.2	04.08-	62	LMU/B12D1
	1.2 LPG	04.08-	62	LMU/B12D1
	1.4	04.08-	74	A14XER/LDT/F14D4
Aveo Sedan	1.2	03.06-12.07	53	F12S3/LQ5
	1.2	01.08-	62	LMU/B12D1
	1.4	03.06-12.07	69	F14D3/L14
	1.4	09.08-	74	F14D4
	1.5	05.05-	62	F15S3/LX6
Captiva (C100, C140)	2.4	06.06-	100	Z 24 SED
	2.4	12.06-	103	Z 24 SED
	2.4 4WD	06.06-	100	Z 24 SED
	2.4 4WD	12.06-	103	Z 24 SED
	2.4 LPG	01.07-	100	Z 24 SED
	2.4 LPG 4WD	01.07-	100	Z 24 SED
Cruze (J300)	1.6	05.09-	80	LXV/F16D3/LXT
	1.6	05.09-	83	F16D4
	1.6	05.09-	91	LDE/F16D4
Evanda	2.0	03.05-	96	X 20 SED
Kalos	1.2	03.05-	53	B12S1
	1.4	03.05-	61	F14S3
	1.4 16V	03.05-	69	F14D3
Kalos Sedan	1.2	03.05-	53	F12S3
	1.4	03.05-	61	F14S3
	1.4 16V	03.05-	69	F14D3
Lacetti (J200)	1.8	08.05-	89	F18D3
	1.8	03.05-	90	T18SED
Matiz (M200, M250)	1.0	03.05-	47	B10S
	1.0	03.05-	49	B10S1
	1.0 LPG	03.05-	49	B10S1
Nubira Combi	1.8	03.05-	90	T18SED
Nubira Sedan	1.8	03.05-	90	T18SED
Spark	1.0 SX	05.05-	46	LA2/B10S
	1.0 SX	05.05-	49	B10S1
Spark (M300)	1.0	03.10-	50	B10D1
	1.2	03.10-	60	LMU/B12D1
Tacuma	1.6	03.05-	77	A16DMS
	1.6	08.05-	79	A16DMS
	2.0	03.05-	89	T20SED
	2.0	08.05-	90	T20SED
DAEWOO				
Evanda (KLAL)	2.0	08.02-	96	L88/X 20 SED
Kalos (KLAS)	1.2	04.03-	53	B12S1
	1.4	09.02-	61	F14S3
	1.4 16V	04.03-	69	F14D3
Kalos Sedan (KLAS)	1.4	11.02-12.04	61	F14S3
	1.4	05.03-12.04	69	F14D3
Lacetti CC (KLAN)	1.4	02.04-	70	F14D3
	1.8	02.04-	90	T18SED
Lacetti Sedan (J200)	1.8 CDX	08.03-12.04	90	T18SED
Lanos (KLAT)	1.5	05.97-	63	A15SMS
Matiz (KLYA)	1.0	01.03-	47	B10S

< CL220

DAEWOO				
Nubira Sedan (KLAJ)	2.0	06.99-07.03	81	C20SED
Nubira Sedan (KLAN)	1.8	07.03-	90	T18SED
Nubira Wagon (KLAN)	1.8	07.03-	90	T18SED
Tacuma (KLAU)	1.6	09.00-	77	A16DMS
	1.8	09.00-	67	F18D2
	1.8	09.00-	72	A18DMS
	1.8	09.00-	74	F18S2
	2.0	09.01-	89	X 20 SED
	2.0	09.00-	94	T20SED
OPEL (VAUXHALL)				
Antara	2.4	09.08-	103	Z 24 XE
	2.4	05.06-	104	Z 24 XED

CL221

OEM-No.
ALFA ROMEO 71739725
FIAT 71739725
GM 1104082
10458316
OPEL 12 08 021

ALFA ROMEO				
159 (939)	1.8 MPI	03.07-11.11	103	939 A4.000
	1.8 TBi	05.09-11.11	147	939 B1.000
159 Sportwagon	1.8 MPI	03.07-11.11	103	939 A4.000
	1.8 TBi	05.09-11.11	147	939 B1.000
FIAT				
Croma (194)	1.8 16V	12.05-	103	939 A4.000
Stilo (192)	1.6 16V	05.05-11.06	77	192 B3.000
OPEL (VAUXHALL)				
Astra G Cabriolet	1.6	01.03-10.05	76	Z16 XEP
Astra G Caravan	1.6	12.02-07.09	76	Z16 XEP
Astra G CC	1.6	12.02-12.09	76	Z16 XEP
Astra G Coupe	1.6 16V	03.00-05.05	76	Z16 XEP
Astra G Sedan	1.6	12.02-12.09	76	Z16 XEP
Astra H (L48)	1.6	03.04-	77	Z16 XE1/Z16 XEP
	1.6	12.06-	85	A 16 XER/Z16 XER
	1.6 Turbo	02.07-	132	Z16 LET
	1.8	01.06-	103	Z18 XER/A 18 XER
Astra H Caravan	1.6	08.04-	77	Z16 XE1/Z16 XEP
	1.6	12.06-	85	A 16 XER/Z16 XER
	1.6 Turbo	02.07-	132	Z16 LET
	1.8	08.05-	103	Z18 XER/A 18 XER
Astra H GTC (L08)	1.6	03.05-	77	Z16 XE1/Z16 XEP
	1.6	12.06-	85	Z16 XER
	1.6 Turbo	02.07-	132	Z16 LET
	1.8	01.06-	103	Z18 XER
Astra H TwinTop	1.6	09.05-	77	Z16 XE1/Z16 XEP
	1.6	12.06-	85	Z16 XER
	1.6 Turbo	02.07-	132	Z16 LET
	1.8	09.05-	103	Z18 XER/A 18 XER
Corsa D	1.6 Turbo	02.07-	110	Z16 LEL/A 16 LEL
	1.6 Turbo	02.07-	141	B16 LER/A16 LER
Insignia	1.6 Turbo	07.08-	132	A 16 LET
Insignia Caravan	1.6 Turbo	01.09-	132	A 16 LET
Insignia Sedan	1.6 Turbo	01.09-	132	A 16 LET
Meriva	1.6	01.06-05.10	77	Z16 XEP
	1.6 Turbo	09.05-05.10	132	Z16 LET
Signum	1.8	09.05-	103	Z18 XER
Vectra C	1.6	01.06-	77	Z16 XEP
	1.8	01.06-	103	Z18 XER
Vectra C Caravan	1.6	01.06-	77	Z16 XEP
	1.8	01.06-	103	Z18 XER

< CL221

OPEL (VAUXHALL)				
Vectra C GTS	1.6	01.06-	77	Z16 XEP
	1.8	01.06-	103	Z18 XER
Zafira B (A05)	1.6	07.05-	77	Z16 XE1/Z16 XEP
	1.6	01.08-	85	A 16 XER/Z16 XER
	1.6 CNG Turbo	02.09-	110	A 16 XNT/Z16 XNT
	1.8	07.05-	103	Z18 XER/A 18 XER
Zafira B Van	1.8	07.05-	103	Z18 XER/A 18 XER
Zafira Tourer C	1.6 CNG	10.11-	110	A 16 XNT/B 16 XNT

CL222

PIN

OEM-No.
OPEL 12 08 075
90 541 062
90 563 160

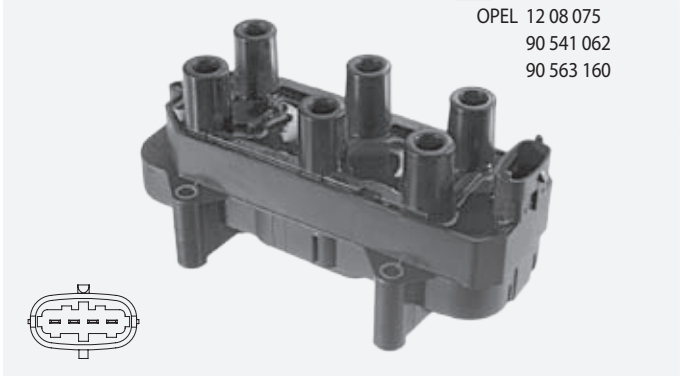

OPEL (VAUXHALL)				
Omega B	2.5 V6	03.94-09.00	125	X 25 XE
	3.0 V6	04.94-02.01	155	X 30 XE
Omega B Caravan	2.5 V6	03.94-09.00	125	X 25 XE
	3.0 V6	04.94-02.01	155	X 30 XE

CL223

OEM-No.
OPEL 12 08 213
90 564 334
91 95 819

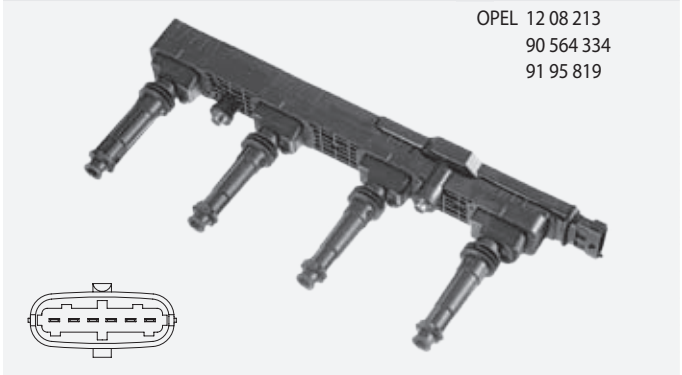

OPEL (VAUXHALL)				
Omega B	2.2 16V	09.99-07.03	106	Y 22 XE/Z 22 XE
Omega B Caravan	2.2 16V	09.99-07.03	106	Y 22 XE/Z 22 XE

CL224

OEM-No.
FIAT 71739285
OPEL 12 08 026
12 08 551
12 08 553
12 567 686
12 569 342
12 580 537

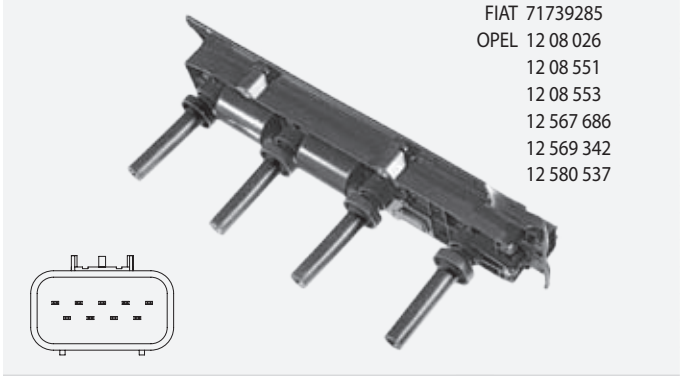

FIAT				
Croma (194)	2.2 16V	06.05-	108	194 A1.000
OPEL (VAUXHALL)				
Astra G Cabriolet	2.2 16V	03.01-10.05	108	Z 22 SE

CL224 ▶

< CL224

OPEL (VAUXHALL)				
Astra G Caravan	2.2 16V	03.01-07.04	108	Z 22 SE
Astra G CC	2.2 16V	06.00-01.05	108	Z 22 SE
Astra G Coupe	2.2 16V	09.00-05.05	108	Z 22 SE
Astra G Sedan	2.2 16V	03.01-01.05	108	Z 22 SE
Speedster	2.2	09.00-	108	Z 22 SE
Vectra B (36_)	2.2 i 16V	09.00-04.02	108	Z 22 SE
Vectra B Caravan	2.2 i 16V	09.00-07.03	108	Z 22 SE
Vectra B CC (38_)	2.2 i 16V	09.00-07.03	108	Z 22 SE
Vectra C	2.2 16V	04.02-	108	Z 22 SE
Vectra C GTS	2.2 16V	08.02-	108	Z 22 SE
Zafira A (F75_)	2.2 16V	09.00-06.05	108	Z 22 SE

CL225

DIN

OEM-No.
CHEVROLET 96453420
DAEWOO 96453420

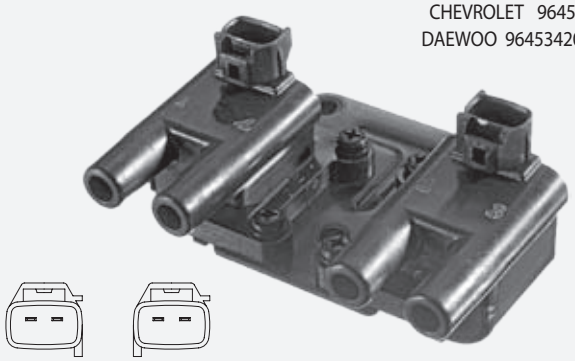

CHEVROLET				
Lacetti (J200)	1.4 16V	03.05-	70	F14D3
	1.6	03.05-	80	F16D3
Nubira Combi	1.6	03.05-	80	F16D3
Nubira Sedan	1.4	01.05-	69	F14D3
	1.4	01.06-	70	F14D3
	1.6	03.05-	80	F16D3
DAEWOO				
Lacetti CC (KLAN)	1.6	02.04-	80	F16D3
Nexia Sedan	1.6	07.08-	80	F16D3
Nubira Sedan (KLAN)	1.6	07.03-	80	F16D3
Nubira Wagon (KLAN)	1.6	07.03-	80	F16D3

CL226

OEM-No.
ALFA ROMEO 71739702
OPEL 62 35 124
9 153 250
93 172 030

ALFA ROMEO				
159 (939)	2.2 JTS	09.05-11.11	136	939 A5.000
159 Sportwagon	2.2 JTS	03.06-11.11	136	939 A5.000
Brera	2.2 JTS	01.06-	136	939 A5.000
Spider (939)	2.2 JTS	09.06-	136	939 A5.000
OPEL (VAUXHALL)				
Signum	2.2 Direct	05.03-	114	Z 22 YH
Vectra C	2.2 Direct	10.03-	114	Z 22 YH
Vectra C Caravan	2.2 Direct	10.03-	114	Z 22 YH
Vectra C GTS	2.2 Direct	10.03-	114	Z 22 YH
Zafira B (A05)	2.2	07.05-	110	Z 22 YH

CL228

DIN

OEM-No.
GM 3474200
9268344
OPEL 1208022
1208031

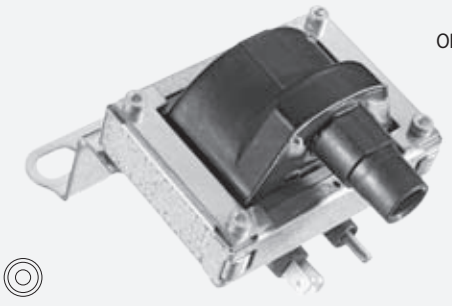

OPEL (VAUXHALL)				
Corsa A CC	1.0	09.82-03.93	33	10 S
	1.2	09.82-08.90	33	E 12 GV/12 NC
Corsa A TR	1.0	09.82-09.92	33	10 S
	1.2 N	01.85-10.87	33	E 12 GV/12 NC
Corsa A Van	1.0	02.86-04.89	33	10 S
	1.2	02.86-04.89	33	E 12 GV/12 NC
Kadett D	1.2	08.79-07.82	39	12 N
	1.2	08.82-08.84	40	12 ST
Kadett D Caravan	1.2	08.79-07.82	39	12 N
Kadett E	1.2	09.84-07.86	40	12 SC
Kadett E Caravan	1.2	09.84-07.86	40	12 SC
Kadett E CC	1.2	09.84-07.86	40	12 SC
Kadett E Van	1.2	09.84-07.86	40	12 SC
Manta A	1.6	02.75-08.75	44	16 N
	1.6	09.70-08.75	50	16 N
	1.6	02.75-08.75	55	16 S
	1.6 S	09.70-08.75	59	16 S
	1.9 S	09.70-08.75	66	19 S
Manta B	1.3 S	08.81-08.86	55	13 S
	1.6 N	09.75-12.80	44	16 N
	1.6 S	09.75-12.81	55	16 S
	1.8 S	07.82-08.87	66	18 S
	1.9 S	09.75-12.80	66	19 S
	2.0 E	08.77-08.88	81	20 E
	2.0 S	08.77-08.84	74	20 S
Manta B CC	1.3 S	08.79-08.86	55	13 S
	1.6 N	09.75-12.80	44	16 N
	2.0 E	08.77-08.88	81	20 E
	2.0 S	08.77-08.84	74	20 S

CL229

OEM-No.
OPEL 12 08 209
90 584 336
91 18 114

for cylinder 1 & 3 & 5 (coil CL230: 2 & 4 & 6)

OPEL (VAUXHALL)				
Omega B	2.6 V6	09.00-07.03	132	Y 26 SE
	3.2 V6	02.01-07.03	160	Y 32 SE
Omega B Caravan	2.6 V6	09.00-07.03	132	Y 26 SE
	3.2 V6	02.01-07.03	160	Y 32 SE
Signum	3.2 V6	05.03-	155	Z 32 SE
Vectra B (36_)	2.6 i V6	09.00-04.02	125	Y 26 SE
Vectra B Caravan	2.6 i V6	09.00-07.03	125	Y 26 SE
Vectra B CC (38_)	2.6 i V6	09.00-07.03	125	Y 26 SE
Vectra C	3.2 V6	08.02-	155	Z 32 SE
Vectra C Caravan	3.2 V6	10.03-	155	Z 32 SE
Vectra C GTS	3.2 V6	08.02-	155	Z 32 SE

CL230

OEM-No.
OPEL 12 08 210
90 584 337
91 18 115

for cylinder 2 & 4 & 6 (coil CL229: 1 & 3 & 5)

OPEL (VAUXHALL)				
Omega B	2.6 V6	09.00-07.03	132	Y 26 SE
	3.2 V6	02.01-07.03	160	Y 32 SE
Omega B Caravan	2.6 V6	09.00-07.03	132	Y 26 SE
	3.2 V6	02.01-07.03	160	Y 32 SE
Vectra B (36_)	2.6 i V6	09.00-04.02	125	Y 26 SE
Vectra B Caravan	2.6 i V6	09.00-07.03	125	Y 26 SE
Vectra B CC (38_)	2.6 i V6	09.00-07.03	125	Y 26 SE

CL231

DIN

OEM-No.
DAEWOO 94582699

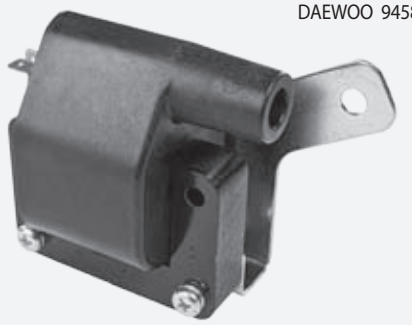

DAEWOO				
Tico (KLY3)	0.8	02.95-12.00	35	F8C
	0.8	01.96-12.00	38	F8CV

CL232

OEM-No.
GM 1208015
55350843
90173708
93173708

OPEL (VAUXHALL)				
Signum	3.2 V6	05.03-	155	Z 32 SE
Vectra C	3.2 V6	08.02-	155	Z 32 SE
Vectra C Caravan	3.2 V6	10.03-	155	Z 32 SE
Vectra C GTS	3.2 V6	08.02-	155	Z 32 SE

CL233

OEM-No.
CHEVROLET 96476983
GM 55561655
OPEL 1208086

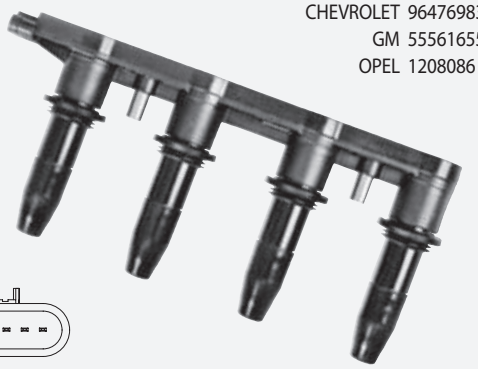

CHEVROLET				
Aveo CC (T300)	1.6	03.11-	85	F16D4
Aveo Sedan (T300)	1.6	03.11-	85	F16D4
OPEL (VAUXHALL)				
Astra GTC J	1.6	10.11-	132	A 16 LET
	1.8	10.11-	103	A 18 XER
Astra J	1.6	12.09-	85	A 16 XER
	1.6 Turbo	12.09-	132	A 16 LET
Astra J Sedan	1.6	06.12-	85	A 16 XER
	1.6 Turbo	06.12-	132	A 16 LET
Astra J Sports Tourer	1.6	10.10-	85	A 16 XER
	1.6 Turbo	10.10-	132	A 16 LET
Corsa E	1.6 Turbo	03.15-	152	B 16 LES
Insignia	1.6	07.08-	85	A 16 XER
	1.8	07.08-	103	A 18 XER
Insignia Caravan	1.6	07.08-	85	A 16 XER
	1.8	07.08-	103	A 18 XER
Insignia Sedan	1.6	07.08-	85	A 16 XER
	1.8	07.08-	103	A 18 XER
Mokka	1.8	01.13-	103	A 18 XER
	1.8 4x4	01.13-	103	A 18 XER
Zafira B (A05)	1.8	06.13-	88	A 18 XEL
Zafira Tourer C	1.8	10.11-	103	A 18 XER
	1.8	10.11-	85	A 18 XEL
	1.8	10.11-	88	A 18 XEL

CL234

OEM-No.
CHEVROLET 96414260
GM 19005277
25181813

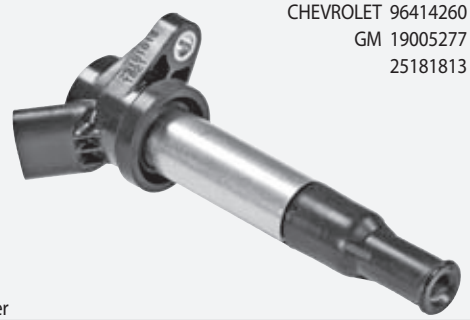

1 coil per cylinder

CHEVROLET				
Epica (KL1_)	2.0	06.06-	105	X 20 D1
	2.5	06.06-	115	LF4

CL235

OEM-No.
GM 12787707
OPEL 12787707
SAAB 12787707

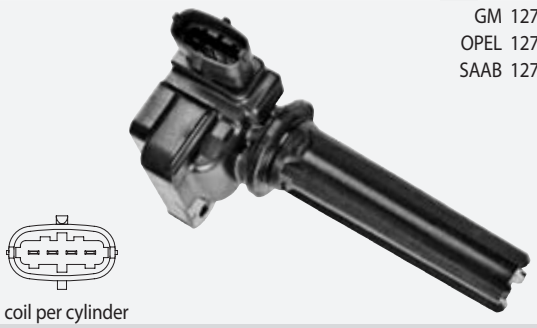

1 coil per cylinder

OPEL (VAUXHALL)				
Signum	2.0 Turbo	05.03-	129	Z 20 NET
Vectra C	2.0 16V Turbo	03.03-	129	Z 20 NET
Vectra C Caravan	2.0 Turbo	10.03-	129	Z 20 NET
Vectra C GTS	2.0 16V Turbo	03.03-	129	Z 20 NET
SAAB				
9-3 (YS3F)	2.0 T BioPower	09.02-	154	B207R
	2.0 T BioPow. XWD	01.08-	154	B207R
	2.0 Turbo XWD	01.08-	154	B207R
9-3 Cabriolet (YS3F)	1.8 T	08.03-	110	B207E
	2.0 T	08.03-	154	B207R
9-3 Combi (YS3F)	1.8 T 2.0	03.05-	110	B207E
	2.0 T BioPow. XWD	06.08-	154	B207R
	2.0 T XWD	06.08-	154	B207R
9-3X	2.0 T BioPow. XWD	02.09-	154	B207R
	2.0 T XWD	02.09-	154	B207R

CL236

OEM-No.
FIAT 71750222
71768140
71768298
GM 93194165
OPEL 4709290
SUZUKI 33400-51K10

1 coil per cylinder

FIAT				
Sedici	1.6 16V	07.09-	79	M16A
	1.6 16V	07.09-	88	M16A
	1.6 16V 4x4	07.09-	79	M16A
	1.6 16V 4x4	07.09-	88	M16A
OPEL (VAUXHALL)				
Agila (B) (H08)	1.0	07.11-	50	K10B
	1.0	04.08-	48	K10B
	1.0 LPG	01.10-	48	K10B
	1.2	04.08-	63	K12B
	1.2	11.10-	69	K12B
	1.2 LPG	04.08-	63	K12B
SUZUKI				
Splash	1.0	01.08-	48	K10B
	1.0	06.11-	50	K10B
	1.2	01.08-	63	K12B
	1.2 VVT	09.10-	69	K12B

CL237

OEM-No.
GM 12529546
12578224
12638824
OPEL 1208089
4802236
4805094

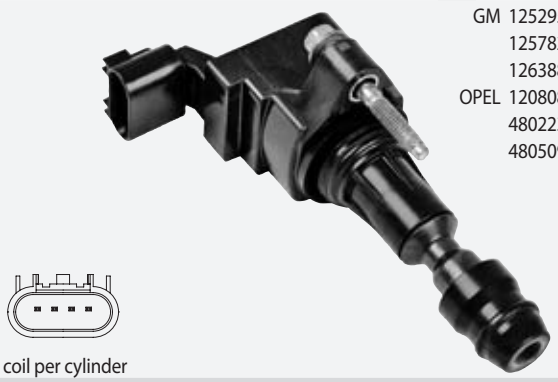

1 coil per cylinder

CHEVROLET				
Captiva (C100, C140)	2.4	03.11-	123	A 24 XE/LE5
	2.4 4WD	03.11-	123	A 24 XE/LE5
OPEL (VAUXHALL)				
Antara	2.4	12.10-	123	A 24 XE
	2.4 4x4	12.10-	123	A 24 XE
Astra GTC J	2.0	04.12-	206	A 20 NFT
GT Cabriolet	2.0	06.07-	194	LNF/Z 20 NHH
Insignia	2.0 E85 Turbo	09.10-	162	A 20 NHT
	2.0 Turbo	07.08-	162	A 20 NHT
	2.0 Turbo 4x4	07.08-	162	A 20 NHT
	2.0 Turbo 4x4	09.11-	184	A 20 NFT
Insignia Caravan	2.0 E85 Turbo	09.10-	162	A 20 NHT
	2.0 Turbo	07.08-	162	A 20 NHT
	2.0 Turbo 4x4	07.08-	162	A 20 NHT
	2.0 Turbo 4x4	09.11-	184	A 20 NFT
Insignia Sedan	2.0 Turbo	07.08-	162	A 20 NHT
	2.0 Turbo 4x4	07.08-	162	A 20 NHT
	2.0 Turbo 4x4	09.11-	184	A 20 NFT
	2.0 Turbo E85	07.08-	162	A 20 NHT
SAAB				
9-3 (YS3F)	2.0 T	01.11-	162	A 20 NFT
	2.0 T BioPower	01.11-	162	A 20 NFT
	2.0 T BioPow. XWD	01.08-	162	A 20 NFT
	2.0 T XWD	01.08-	162	A 20 NFT
9-3 Cabriolet	2.0 T	01.11-	162	A 20 NFT
	2.0 T BioPower	01.11-	162	A 20 NFT
9-3 Combi (YS3F)	2.0 T	01.11-	162	A 20 NFT
	2.0 T BioPower	01.11-	162	A 20 NFT
	2.0 T BioPow. XWD	01.11-	162	A 20 NFT
	2.0 T XWD	01.11-	162	A 20 NFT
9-3X	2.0 T BioPow. XWD	01.11-	162	A 20 NFT
9-5 (YS3G)	2.0 T BioPower	05.10-	162	A 20 NFT
	2.0 T BioPow. XWD	05.10-	162	A 20 NHT
	2.0 Turbo	05.10-	162	A 20 NHT
	2.0 Turbo XWD	05.10-	162	A 20 NHT

CL238

OEM-No.
CHEVROLET 55575499
GM 55573735
1208092
OPEL 1208093
1208096
55577898
55579072

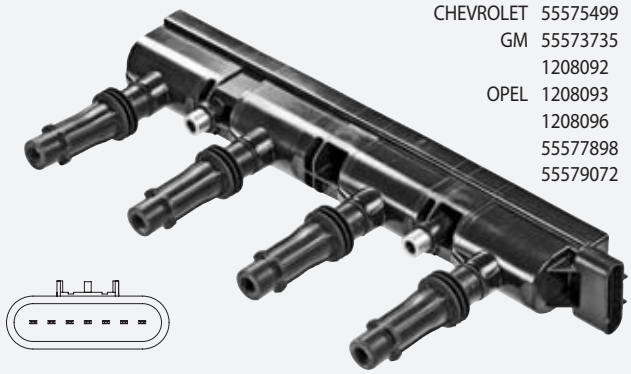

CHEVROLET				
Aveo CC (T300)	1.2	03.11-	51	A 12 XEL
	1.2	03.11-	63	A 12 XER
	1.2 LPG	11.12-	63	A 12 XER

< CL238

CHEVROLET				
Aveo CC (T300)	1.4	03.11-	74	A 14 XER
	1.4 Turbo	08.13-	103	LUJ/LUV
Aveo Sedan (T300)	1.2	03.11-	51	A 12 XEL
	1.2	03.11-	63	A 12 XER
	1.2 LPG	11.12-	63	A 12 XER
	1.4	07.11-	74	A 14 XER
Cruze CC (J305)	1.4	06.12-	103	LUJ
Cruze Stat. Wagon	1.4	08.12-	103	LUJ
Orlando (J309)	1.4	06.12-	103	LUJ
Trax	1.4	12.12-	103	LUJ/LUV
	1.4 AWD	12.12-	103	LUJ
	1.4 LPG	04.13-	103	A 14 NET/B 14 NET
OPEL (VAUXHALL)				
Adam	1.2	10.12-	51	A 12 XEL
	1.2	07.13-	69	
	1.4	10.12-	64	A 14 XEL
	1.4	10.12-	74	A 14 XER
	1.4 LPG	07.13-	64	A 14 XEL
Ampera	EV 150	11.11-	111	A 14 XFL
Astra GTC J	1.4	10.11-	74	A 14 XER
	1.4	10.11-	88	B 14 NEL/A 14 NEL
	1.4	10.11-	103	A 14 NET/B 14 NET
Astra J	1.4	12.09-	64	A 14 XEL
	1.4	12.09-	74	A 14 XER
	1.4 LPG	01.12-	103	A 14 NET
	1.4 Turbo	10.10-	88	A 14 NEL
	1.4 Turbo	12.09-	103	A 14 NET
Astra J Sedan	1.4	06.12-	74	A 14 XER
	1.4 LPG	07.14-	103	A 14 NET
	1.4 Turbo	06.12-	103	A 14 NET/B 14 NET
	1.4 Turbo	06.12-	88	A 14 NEL
Astra J Sports Tourer	1.4	10.10-	74	A 14 XER
	1.4 LPG	01.12-	103	A 14 NET
	1.4 Turbo	10.10-	88	A 14 NEL
	1.4 Turbo	10.10-	103	A 14 NET/B 14 NET
Cascada (W13)	1.4	03.13-	88	A 14 NEL
	1.4 Turbo	03.13-	103	A 14 NET
Corsa D	1.2	06.10-	51	A 12 XEL
	1.2	06.10-	63	A 12 XER
	1.2 LPG	06.11-	61	A 12 XER
	1.2 LPG	08.11-	63	A 12 XER
	1.4	09.09-	64	A 14 XEL
	1.4	06.10-	74	A 14 XER
	1.4	07.12-	88	A 14 NEL
	1.4 LPG	09.09-	64	A 14 XEL
Corsa E	1.2	09.14-	51	B 12 XEL
	1.4	09.14-	55	B 14 XEJ
	1.4	09.14-	66	B 14 XEL
	1.4 LPG	03.15-	66	B 14 XEL
	1.4 Turbo	09.14-	74	B 14 NEJ
	1.4 Turbo	03.15-	110	B 14 NEH
Corsa E Van	1.2	01.15-	51	B 12 XEL
Insignia	1.4	04.11-	103	A 14 NET
	1.4 LPG	07.12-	103	A 14 NET
Insignia Caravan	1.4	09.11-	103	A 14 NET
	1.4 LPG	07.12-	103	A 14 NET
Insignia Sedan	1.4	04.11-	103	A 14 NET
	1.4 LPG	07.12-	103	A 14 NET
Meriva B	1.4	06.10-	74	A 14 XER/B 14 XER
	1.4	06.10-	88	B 14 NEL/A 14 NEL
	1.4	06.10-	103	A 14 NET/B 14 NET
	1.4 LPG	06.11-	88	B 14 NEL/A 14 NEL
Mokka	1.4	04.13-	103	A 14 NET/B 14 NET
	1.4 4x4	06.12-	103	A 14 NET/B 14 NET
	1.4 LPG	04.13-	103	A 14 NET
Zafira Tourer C	1.4	10.11-	88	B 14 NEL/A 14 NEL
	1.4	10.11-	103	A 14 NET/B 14 NET
	1.4 LPG	10.11-	103	A 14 NET/B 14 NET

CL239

OEM-No.
GM 12566569
12583514
12613057
12629037

1 coil per cylinder

OPEL (VAUXHALL)				
Signum	2.8 V6 Turbo	09.05-	169	Z 28 NEL
	2.8 V6 Turbo	01.06-	184	Z 28 NET
Vectra C	2.8 V6 Turbo	08.05-	169	Z 28 NEL
	2.8 V6 Turbo	08.06-	184	Z 28 NET
	2.8 V6 Turbo	08.05-	188	Z 28 NET
Vectra C Caravan	2.8 V6 Turbo	08.05-	169	Z 28 NEL
	2.8 V6 Turbo	01.07-	184	Z 28 NET
	2.8 V6 Turbo	08.05-	188	Z 28 NET
	2.8 V6 Turbo	01.07-	206	Z 28 NET
Vectra C GTS	2.8 V6 Turbo	08.05-	169	Z 28 NEL
	2.8 V6 Turbo	08.06-	184	Z 28 NET
	2.8 V6 Turbo	08.05-	188	Z 28 NET
	2.8 V6 Turbo	08.06-	206	Z 28 NET
SAAB				
9-3 (YS3F)	2.8 Turbo V6	03.05-	184	LP9
	2.8 Turbo V6	12.07-	188	B284L
	2.8 Turbo V6 XWD	05.08-	206	B284R
9-3 Cabriolet	2.8 Turbo V6	02.06-	184	LP9
	2.8 Turbo V6	12.07-	188	B284L
	2.8 Turbo V6	02.09-	203	B284R
	2.8 Turbo V6	02.09-	206	B284R
9-3 Combi (YS3F)	2.8 Turbo V6	03.05-	184	LP9
	2.8 Turbo V6	12.07-	188	B284L
	2.8 Turbo V6 XWD	05.08-	206	B284R

CL240

OEM-No.
GM 55569253
OPEL 1208109

1 coil per cylinder

OPEL (VAUXHALL)				
Astra GTC J	1.6 SIDI	12.12-	125	A 16 XHT
Astra J	1.6 SIDI	12.12-	125	A 16 XHT
Astra J Sedan	1.6 SIDI	12.12-	125	A 16 XHT
Astra J Sports Tourer	1.6 SIDI	12.12-	125	A 16 XHT
Cascada (W13)	1.6 SIDI	03.13-	125	A 16 XHT
Insignia	1.6 SIDI	03.13-	125	A 16 XHT
Insignia Caravan	1.6 SIDI	03.13-	125	A 16 XHT
Insignia Sedan	1.6 SIDI	03.13-	125	A 16 XHT
Zafira Tourer C	1.6 SIDI	12.12-	125	A 16 XHT

CL241

OEM-No.
GM 96476979
CHEVROLET 25186686
55570160
96476979

CHEVROLET				
Cruze (J300)	1.8	05.09-	104	2H0/F18D4
Cruze CC (J305)	1.8	06.11-	104	F18D4
	1.8 LPG	06.11-	104	F18D4
Cruze Stat. Wagon	1.8	08.12-	104	2H0
Orlando (J309)	1.8	02.11-	104	2H0/F18D4

CL242

OEM-No.
GM 55573734
55577946
55579071
OPEL 1208091
1208094

OPEL (VAUXHALL)				
Corsa D	1.0	01.10-	48	A 10 XEP
Corsa D Van	1.0	07.06-	44	A 10 XEP
	1.0	01.10-	48	A 10 XEP

CL243

OEM-No.
GM 12635672
OPEL 1208117

1 coil per cylinder

OPEL (VAUXHALL)				
Adam	1.0	07.13-	50	
	1.0	07.14-	66	B 10 XFL
	1.0	07.14-	85	B 10 XFT
Astra K	1.0	06.15-	77	B 10 XFL
Corsa E	1.0	09.14-	66	B 10 XFL
	1.0	09.14-	85	B 10 XFT

CL244

OEM-No.
GM 25186687
55584404
OPEL 1208098

OPEL (VAUXHALL)				
Astra J	1.6	12.09-	85	A16 XER/B16 XER
Astra J Sedan	1.6	06.12-	85	A16 XER/B16 XER
Astra J Sports Tourer	1.6	10.10-	85	A16 XER/B16 XER
Mokka	1.6	06.12-	85	A16 XER/B16 XER

CL245

OEM-No.
CADILLAC 12610626
CHEVROLET 12610626
GM 12632479
12618542
OPEL 1208087
SAAB 12632479
SUZUKI 33400-78J02

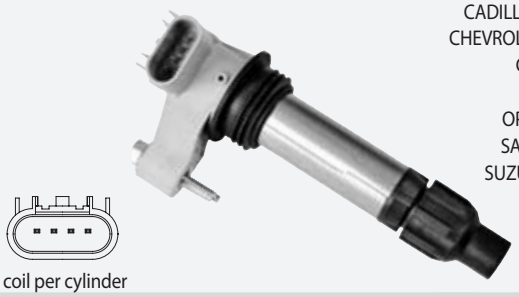

1 coil per cylinder

CADILLAC				
CTS	3.0	01.08-	203	LF1
	3.0 AWD	01.08-	203	LF1
	3.6	01.10-	199	LLT
	3.6	09.11-	237	LLT
	3.6	01.08-	229	LLT
	3.6 AWD	01.10-	199	LLT
	3.6 AWD	09.11-	237	LLT
	3.6 AWD	01.08-	229	LLT
CTS Coupe	3.0	01.10-	201	LF1
	3.0 AWD	01.10-	201	LF1
	3.6	01.08-	229	LLT
	3.6	09.11-	237	LLT
	3.6 AWD	01.08-	229	LLT
	3.6 AWD	09.11-	237	LLT
CTS Sport Wagon	3.0	01.08-	203	LF1
	3.0 AWD	01.08-	203	LF1
	3.6	01.08-	229	LLT
	3.6	09.11-	237	LLT
	3.6 AWD	01.08-	229	LLT
	3.6 AWD	09.11-	237	LLT
SRX	3.0	01.09-	198	LF1
	3.0 AWD	01.09-	198	LF1
	3.0 AWD	01.09-	199	LF1
	3.6 AWD	10.12-	234	LFX
STS	3.6	10.09-	229	LLT
	3.6 AWD	10.09-	229	LLT
CHEVROLET				
Camaro	3.6	01.11-	232	LLT
Camaro Convertible	3.6	01.11-	232	LLT
Captiva (C100, C140)	3.0 4WD	01.10-	190	A 30 XH/LF1
	3.2 4WD	06.06-	169	10 HM
OPEL (VAUXHALL)				
Antara	3.0	11.10-	190	A 30 XH
	3.2 V6	03.07-	167	Z 32 SEE/10 HM
Insignia	2.8 V6 Turbo 4x4	07.08-	191	A 28 NET
	2.8 V6 Turbo OPC	07.09-	239	A 28 NER
Insignia Caravan	2.8 V6 Turbo 4x4	10.08-	191	A 28 NET

< CL245

OPEL (VAUXHALL)				
Insignia Caravan	2.8 V6 Turbo OPC	07.09-	239	A 28 NER
Insignia Sedan	2.8 V6 Turbo 4x4	07.08-	191	A 28 NET
	2.8 V6 Turbo OPC	07.09-	239	A 28 NER
SAAB				
9-5 (YS3G)	2.8 Turbo V6 XWD	05.10-01.12	221	A 28 NER
SUZUKI				
Grand Vitara II (JT)	3.2 Allrad	01.09-02.15	171	N32A

CL300

DIN

OEM-No.

ALFA ROMEO 60805420
60809492
FIAT 46543562
46548037
46790073
7626232
7672018
76262320

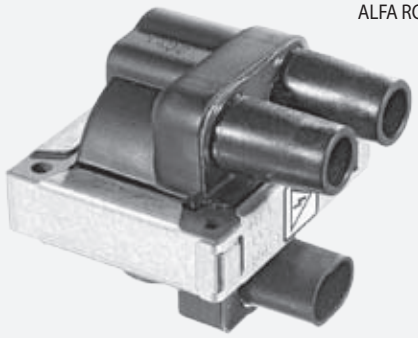

ALFA ROMEO				
33 (907A)	1.4 i.e.	06.91-09.94	65	AR 30753
	1.4 i.e.	06.91-09.94	66	AR 30753
33 Sportwagon	1.4 i.e.	06.91-09.94	65	AR 30753
	1.4 i.e.	06.91-09.94	66	AR 30753
145 (930)	1.4 i.e.	07.94-12.96	66	AR 33501
146 (930)	1.4 i.e.	12.94-12.96	66	AR 33501
155 (167)	2.0 16V Turbo Q4	01.92-12.97	137	AR 67203
	2.0 16V Turbo Q4	01.92-12.97	140	AR 67203
FIAT				
Cinquecento (170)	0.7	12.91-01.96	23	170 A.000
	0.7 i	07.94-01.98	22	170 A.046
	0.9	07.91-12.93	30	170 A1.000
	0.9 i.e.	07.91-12.93	30	170 A1.046
	0.9 i.e. S	07.91-07.99	29	1170 A1._ _ _
	1.1 Sporting	10.94-01.98	40	176 B2.000
Coupe (FA/175)	2.0 16V Turbo	11.93-08.96	140	175 A1.000
Doblo (119)	1.2	03.01-	48	223 A5.000
Doblo Cargo (223)	1.2	03.01-	48	223 A5.000
Palio (178BX)	1.0	04.96-	45	
	1.0	04.96-	56	
	1.2	06.98-	54	178 B5._/178 E2._
	1.2	07.97-08.02	44	188 A4.000
	1.4	04.96-	51	178 B2.000
	1.4 cat	04.96-	51	178 B2.016
	1.5	04.96-	57	
	1.5	06.04-	62	178 E5.022
Palio Weekend	1.2	02.01-	44	178 C4._/188 A4._
	1.2	04.96-02.01	54	178 B5.000
	1.4	07.97-08.01	51	178 B2.000
	1.5	02.02-	62	178 E5.022
Panda (141A_)	900	04.92-12.96	29	1170 A1.046
	1000 4x4	05.86-12.94	33	141 C2._/156 A2._
	1000 i.e. cat	10.87-08.98	33	141 C2._/156 A2._
	1100	05.91-12.99	37	156 C.046
	1100	02.95-09.03	40	187 A1._/176 B2._
	1100 4x4	02.95-07.04	40	176 B2.000
	1100 Trekking 4x4	10.91-07.04	37	156 C.046
Panda (169)	1.1	09.03-	40	187 A1.000
	1.2	09.03-	44	188 A4.000
	1.2 4x4	10.04-	44	188 A4.000
	1.2 LPG	04.09-	44	188 A4.000
	1.2 Natural Power	01.07-11.09	44	188 A4.000
Panda Van (141_)	1000 i.e	08.92-02.04	33	156 A2.246
Panda Van (169)	1.2	09.04-	44	188 A4.000
	1.2 4x4	09.04-	44	188 A4.000
	1.2 LPG	04.09-	44	188 A4.000
	1.2 Natural Power	01.07-11.09	44	188 A4.000

< CL300

FIAT				
Punto (176)	55 1.1	09.93-09.99	40	176 A6._/176 B2._
	60 1.2	01.94-09.99	43	176 A7.000
	60 1.2	03.94-09.99	44	176 B1._/176 B4._
	75 1.2	10.93-09.99	54	176 A8.000
	1.2 16V	04.97-09.99	63	176 B9.000
Punto (188)	1.2 60	09.99-	44	188 A4.000
	1.2 Natural Power	09.03-	44	188 A4.000
Punto Cabriolet	60 1.2	04.94-06.00	43	176 A7.000
	60 1.2	05.95-06.00	44	176 B1._/176 B4._
	85 1.2 16V	04.97-06.00	63	176 B9.000
Punto Van (176L)	1.1	04.96-02.00	40	176 B2.000
Punto Van (188AX)	1.2 60	02.00-10.09	44	188 A4.000
Seicento (187)	0.9	01.98-01.10	29	1170 A1.046
	1.1	01.98-01.10	40	187 A1._/176 B2._
Seicento Van (187)	0.9	01.98-01.10	29	1170 A1.046
	1.1	01.98-01.10	40	176 B2.000
Siena (178_)	1.2	09.98-	54	178 B5.000
	1.4	04.96-	51	178 B2.000
	1.4 cat	04.96-	51	178 B2.016
	1.5	06.04-	62	178 E5.022
Strada Pick-up (178E)	1.2	04.03-	44	188 A4.000
	1.2	06.99-	54	178 B5.000
Tempra (159)	1.8 i.e.	09.93-08.96	66	835 C4.000
	1.8 i.e.	10.94-08.96	74	836 A5.000
	1.8 i.e.	09.93-08.96	76	835 C2.000
Tempra S.W.	1.8 i.e.	09.93-08.96	66	835 C4.000
	1.8 i.e.	10.94-08.96	74	836 A5.000
	1.8 i.e.	09.93-08.96	76	835 C2.000
Tipo (160)	1.8 i.e.	09.93-04.95	66	835 C4.000
	1.8 i.e	03.93-04.95	71	836 A5.000
	1.8 i.e.	10.94-10.95	74	836 A5._/159 A4._
	1.8 i.e.	04.93-04.95	76	835 C2.000
LANCIA				
Dedra (835)	1.8 16V LE	03.96-07.99	83	182 A2.000
	1.8 i.e.	07.94-07.99	74	836 A5.000
Dedra SW	1.8 16V LE	03.96-07.99	83	182 A2.000
	1.8 i.e.	07.94-07.99	74	836 A5.000
Delta I (831AB0)	2.0 16V HF Integrale	06.93-01.94	155	831 E5._
Delta II (836)	1.8 i.e.	07.94-08.99	66	835 C4._/836 _
	1.8 i.e.	12.94-08.99	76	835 C2.000
	1.8 i.e. 16V	03.96-08.99	83	182 A2.000
	1.8 i.e. 16V GT	03.96-08.99	96	183 A1.000
	2.0 16V Turbo	06.93-08.99	137	836 A2.000
	2.0 16V Turbo	07.96-08.99	142	175 A4.000
Thema (834)	2000 16V Turbo	12.88-06.90	133	834 C1.000
	2000 i.e. 16V	02.89-05.92	104	834 B2.246
	2000 i.e. 16V Turbo	04.89-05.92	130	834 C1.246
Thema SW (834)	2000 i.e. 16V	02.89-05.92	104	834 B2.246
	2000 i.e. 16V Turbo	04.89-03.93	130	834 C1.246
	2000 i.e. 16V Turbo	12.88-06.90	133	834 C1.000
Y (840A)	1.1	11.95-09.03	40	176 B2.000
	1.2	03.96-09.03	44	840 A3._/188 A4._
	1.2 16V	04.97-09.03	63	176 B9.000
Ypsilon (843)	1.2	10.03-12.11	44	188 A4.000

CL301

OEM-No.

FIAT 46777286
55180004

1 coil per cylinder

FIAT				
Doblo (119)	1.6 16V	10.01-	76	182 B6.000
Doblo Cargo (223)	1.6 16V	10.01-	76	182 B6.000
Palio Weekend	1.6 16V	02.01-	76	182 B6.000

CL301 ▶

< CL301

FIAT				
Stilo (192)	1.6 16V	10.01-11.06	76	182 B6.000
Stilo Multi Wagon	1.6 16V	01.03-08.08	76	182 B6.000

CL302

PIN

OEM-No.

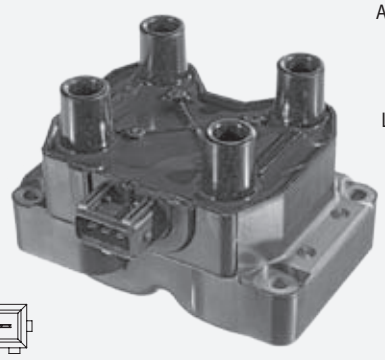

ALFA ROMEO	60809606
FIAT	7648797
	76487970
LANCIA	60558152
LANDROVER	ERR 6045
	ERR6566
PROTON	PW811201
PSA	5970.53

ALFA ROMEO				
155 (167)	1.7 T.S.	04.93-04.96	83	AR 67103
	1.7 T.S.	04.93-04.96	85	AR 67105
	1.7 T.S. 16V	05.96-12.97	103	AR 67106
	1.8 T.S.	02.92-12.97	77	AR 67402
	1.8 T.S.	02.92-06.93	95	AR 67101
	1.8 T.S. Sport	01.92-12.96	93	AR 67101/_67102
	2.0 T.S.	02.92-02.95	104	AR 67202
	2.0 T.S.	02.92-04.93	106	AR 67201
164 (164)	2.0 T.S.	09.92-09.98	106	AR 64103
CITROEN				
Jumpy (U6U)	1.6	10.95-	58	220 A2._/1580 SPI
Jumpy Van	1.6 i	10.95-	58	220 A2._/1580 SPI
FIAT				
Brava (182)	1.2 16V 80	10.00-10.01	59	188 A5.000
	1.2 16V 80	12.98-12.02	60	182 B2.000
	1.4	10.95-10.01	55	182 A5.000
	1.4 12 V	10.95-08.98	59	182 A3.000
Bravo I (182)	1.2 16V 80	10.00-10.01	59	188 A5.000
	1.2 16V 80	12.98-10.00	60	182 B2.000
	1.4	10.95-10.01	55	182 A5.000
	1.4	10.95-10.01	59	182 A3.000
Croma (154)	2000 16V	08.92-08.96	101	154 E1.000
Fiorino Pick-up	1.4	05.94-05.01	49	146 D5.000
Fiorino Van (146)	70 1.4 i.e.	11.96-05.01	49	146 C5._/146 D5._
	75 1.6 i.e.	10.93-05.01	55	146 D6._/146 C6._
Marea (185)	1.2 16V	10.98-05.02	60	182 B2.000
	1.4 80 12V	09.96-05.02	59	182 A3.000
Marea Weekend	1.2 16V	10.98-05.02	60	182 B2.000
	1.4 80 12V	09.96-05.02	59	182 A3.000
Punto (176)	1.4 GT Turbo	09.96-09.99	96	176 B6.000
	1.4 GT Turbo	01.94-09.96	98	176 A4.000
Punto (188)	1.2 16V 80	09.99-	59	188 A5.000
Scudo Combinato	1.6	02.96-12.06	58	220 A 2.000
Scudo Van (220L)	1.6	02.96-12.06	58	220 A 2.000
Tempra (159)	1.4 i.e.	03.95-08.96	51	836 A4.000
	1.6 i.e.	06.92-08.96	55	835 C1.000
	1.6 i.e.	06.94-08.96	66	159 B9.000
Tempra S.W. (159)	1.4 i.e.	10.92-08.96	51	836 A4.000
	1.6 i.e.	10.92-08.96	55	835 C1.000
	1.6 i.e.	10.90-08.96	57	835 C1.000
	1.6 i.e.	06.94-08.96	66	159 B9.000
Tipo (160)	1.4 i.e.	05.89-04.95	51	836 A4.000
	1.6 i.e.	10.92-04.95	55	835 C1.000
FSO				
Polonez III	1.4 i 16V	09.92-03.02	76	Rover K16 DOHC
KIA				
Sportage (K00)	2.0 i 16V	10.99-08.03	94	FE (16V)
	2.0 i 16V 4WD	04.94-08.03	94	FE (16V)
LANCIA				
Dedra (835)	1.6 i.e.	04.93-07.99	55	835 C1.000
	1.6 LE cat	07.94-07.99	66	159 B9.000

< CL302

LANCIA				
Dedra SW (835)	1.6	10.94-07.99	66	159 B9.000
Delta II (836)	1.4 i.e.	10.94-08.99	51	836 A4.000
	1.6 i.e.	06.93-08.99	55	835 C1.000
Kappa (838A)	2.0 16V Turbo	02.95-10.01	151	838 A4.000
Kappa Coupe	2.0 16V Turbo	11.96-03.01	151	838 A4.000
Kappa SW (838B)	2.0 16V Turbo	07.96-10.01	151	838 A4.000
Thema (834)	2000 16V	08.92-12.93	112	834 F1.000
	2000 16V Turbo	10.92-07.94	148	834 F2.000
	2000 i.e.	09.87-05.92	85	834 B.146
Thema SW (834)	2000 16V	05.92-07.94	112	834 F1.000
	2000 Turbo 16V	11.92-07.94	148	834 F2.000
Y (840A)	1.2 16V	10.00-09.03	59	188 A5.000
	1.4 12V	03.96-09.03	55	840 A4.000
	1.4 12V	10.96-09.03	59	840 A2.000
Y10 (156)	1.1 Avenue	01.95-12.95	40	176 B2.000
	1.1 Avenue Allrad	01.95-12.95	40	176 B2.000
	1.1 i.e. Fire	10.92-09.95	37	156 C.046
	1.1 i.e. Fire Allrad	09.92-12.95	37	156 C.046
LANDROVER				
Discovery II (LJ, LT)	4.0 V8 4x4	11.98-06.04	136	56 D
Range Rover II (LP)	3.9 4x4	07.94-03.02	140	42 D
	4.0 4x4	06.98-03.02	136	42 D
	4.6 4x4	06.98-03.02	160	60 D
	4.6 4x4	07.94-03.02	165	46 D
	4.6 4x4	09.96-03.02	168	46 D
PEUGEOT				
Expert (224)	1.6	02.96-	58	222A2 (1580 SPI)
Expert Flatbed (223)	1.6	02.96-	58	222A2 (1580 SPI)
Expert Van (222)	1.6	02.96-	58	222A2 (1580 SPI)
PROTON				
Gen 2 (CM_)	1.3	06.04-	70	S4PE
	1.6	06.04-	82	S4PH
Wira	1.3	08.00-	55	4 G 13
	1.5	08.00-	64	4 G 15
Wira Hatchback	1.3	08.00-	55	4 G 13
	1.5	08.00-	64	4 G 15 M

CL303

DIN

OEM-No.

FIAT 7646975
7753777
07694335

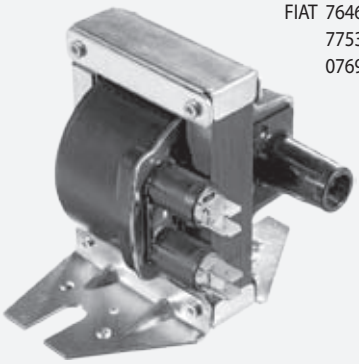

FIAT				
Croma (154)	2000 CHT	12.85-02.89	66	154 A1.000
	2000 i.e.	03.86-09.90	83	834 B.048
Regata (138)	75 1.5 i.e.	07.85-07.89	55	149 C1._/138 C2._
Regata Weekend	75 1.5 i.e. cat	12.86-07.89	55	138 C2.048
LANCIA				
Y10 (156)	1.3 i.e. Fire	02.89-12.95	53	156 B._/146 A 5._

CL304

DIN

OEM-No.
FIAT 7582152
7663177
7698431
7746152
7746154

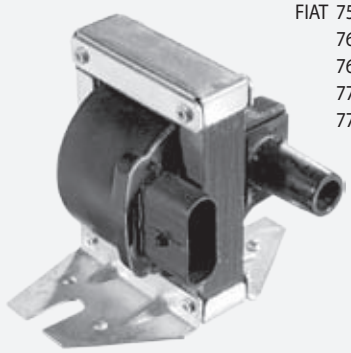

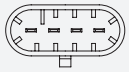

FIAT				
Panda (141A_)	1000	01.85-12.92	37	156 A3.000
	1000 4x4	01.86-12.92	37	156 A3.000
	1100	05.91-12.99	37	156 C.046
	1100 Trekking 4x4	10.91-07.04	37	156 C.046
Tempra (159)	1.4 i.e.	03.91-08.96	57	159 A2.000
Tempra S.W. (159)	1.4 i.e.	03.91-08.96	57	159 A2.000
Tipo (160)	1.1	01.88-10.91	41	160 A3.000
	1.4	07.87-12.89	52	160 A1.000
	1.4 i.e.	05.89-04.95	51	160 A1.046
	1.4 i.e.	05.89-04.95	57	159 A2.000
Uno (146A/E)	45 1.0	01.88-12.93	32	156 A2._
	45 1.0 i.e.	01.88-10.95	33	156 A2.246
	50 1.1	01.90-12.93	37	156 C.046
	50 1.1 i.e.	06.92-12.93	36	146 C3.000
	60 1.1	04.89-12.92	42	160 A3.000
	60 1.1	01.88-12.93	43	146 A4.048
LANCIA				
Y10 (156)	1.0 Fire	06.85-06.91	32	156 A2.100
	1.0 Fire	03.85-06.89	33	156 A2.000
	1.0 Fire cat	10.87-02.92	33	156 A2.246
	1.0 Fire Allrad	12.86-02.89	32	156 A2.100
	1.1 i.e. Fire	07.89-09.92	37	156 C.046
	1.1 i.e. Fire Allrad	09.92-12.95	37	156 C.046

CL305

PIN

OEM-No.
ALFA ROMEO 46469863

coil without COP boot
spare boot CP036
semidirect - 2 coils and ignition lead set T599C

ALFA ROMEO				
145 (930)	1.4 i.e. 16V T.S.	12.96-01.01	76	AR 33503
	1.6 i.e. 16V T.S.	12.96-01.01	88	AR 67601
	1.8 i.e. 16V	03.98-01.01	106	AR 32201
	2.0 16V Quadrifoglio	03.98-01.01	114	AR 32301
	1.4 i.e. 16V T.S.	11.96-01.01	76	AR 33503
	1.6 i.e. 16V T.S.	11.96-01.01	88	AR 67601
	1.8 i.e. 16V T.S.	03.98-01.01	106	AR 32201
	2.0 16V Quadrifoglio	03.98-01.01	114	AR 32301
156 (932)	1.8 16V T.S.	09.97-10.00	106	AR 32201
	2.0 16V T.S.	09.97-10.00	114	AR 32301
166 (936)	2.0 T.S.	09.98-10.00	114	AR 34103
GTV (916C_)	1.8 16V	05.98-10.05	106	AR 32201
	2.0 T.S. 16V	06.95-10.05	110	AR 16201
	2.0 T.S. 16V	05.98-08.00	114	AR 32301

< CL305

ALFA ROMEO				
Spider (916S_)	1.8 16V	05.98-04.05	106	AR 32201
	2.0 T.S. 16V	06.95-04.05	110	AR 16201
	2.0 T.S. 16V	05.98-08.00	114	AR 32301

CL306

PIN

OEM-No.
ALFA ROMEO 7793212

coil without COP boot
spare boot CP036
semidirect - 2 coils and ignition lead set T599C

ALFA ROMEO				
145 (930)	1.4 i.e. 16V T.S.	12.96-01.01	76	AR 33503
	1.6 i.e. 16V T.S.	12.96-01.01	88	AR 67601
	1.8 i.e. 16V T.S.	12.96-12.98	103	AR 67106
	2.0 16V T.S.	10.95-01.01	110	AR 67204
146 (930)	1.4 i.e. 16V T.S.	11.96-01.01	76	AR 33503
	1.6 i.e. 16V T.S.	11.96-01.01	88	AR 67601
	1.8 i.e. 16V T.S.	11.96-01.01	103	AR 67106
	2.0 16V T.S.	10.95-01.01	110	AR 67204
155 (167)	1.6 16V T.S.	05.96-12.97	88	AR 67601
	1.7 T.S. 16V	05.96-12.97	103	AR 67106
	2.0 T.S. 16V	03.95-12.97	110	AR 67299/_67204
156 (932)	1.6 16V T.S.	09.97-09.05	88	AR 32102/_67601
156 Sportwagon	1.6 16V T.S.	05.00-05.06	88	AR 32103/_32104
Spider (916S_)	2.0 T.S. 16V	06.95-04.05	110	AR 16201

CL307

PIN

OEM-No.
ALFA ROMEO 46755605

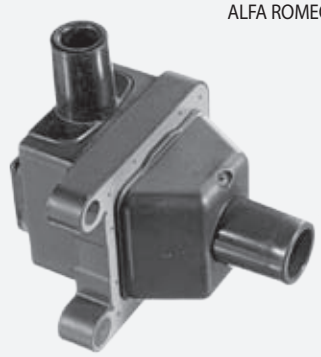

coil without COP boot
spare boot CP036
semidirect - 2 coils and ignition lead set T100C

ALFA ROMEO				
147 (937)	1.6 16V T.S.	01.01-03.10	88	AR 32104
	1.6 16V T.S. Eco	01.01-03.10	77	AR 37203
	2.0 16V T.S.	01.01-03.10	110	AR 32310
156 (932)	1.6 16V T.S.	09.97-09.05	88	AR 32103/_32104
	1.8 16V T.S.	10.00-09.05	103	AR 32205
	2.0 16V T.S.	10.00-03.02	110	AR 32310
156 Sportwagon	1.6 16V T.S.	05.00-05.06	88	AR 32103/_32104
	1.8 16V T.S.	05.00-10.00	106	AR 32201
	1.8 16V T.S.	10.00-05.06	103	AR 32205
	2.0 16V T.S.	05.00-06.02	114	AR 32301
	2.0 16V T.S.	10.00-03.02	110	AR 32310
166 (936)	2.0 T.S.	10.00-06.07	110	AR 36301
GT (937)	1.8 TS	11.03-09.10	103	AR 32205
GTV (916C_)	2.0 T.S. 16V	06.95-10.05	110	AR 32310
Spider (916S_)	2.0 T.S. 16V	06.95-04.05	110	AR 32310

CL308

DIN

OEM-No.
FIAT 7553120
7646974
7746153

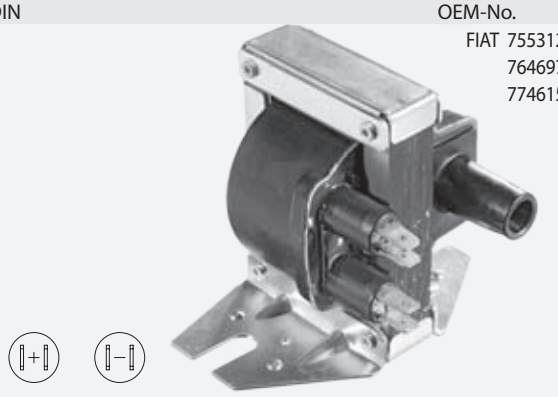

FIAT				
Duna (146 B)	60 1.1	01.87-12.91	43	146 A6.000
	70 1.3	01.87-12.91	49	146 A5.000
Duna Weekend	60 1.1	01.87-12.91	43	146 A6.000
	70 1.3	01.87-12.91	49	146 A5.000
Elba (146_)	1.5	01.92-12.96	55	149 C1.000
Fiorino (127)	1050	01.80-12.87	37	127 A.000
Fiorino (147)	1.0	01.80-12.87	37	127 A.000
	1.3	12.87-08.93	49	146 A5.000
	1.5	01.88-08.93	55	149 C1.000
Fiorino Pick-up	1.3	01.88-12.94	49	146 A5.000
Fiorino Van (146)	60 1.1	05.88-12.93	40	146 A9.000
	70 1.3	01.88-12.94	49	146 A5.000
Panda (141A_)	750	01.86-01.95	25	156 A4.000
	750	01.86-01.95	25	141 B.000
	750 cat	01.95-10.03	25	156 A4.048
Panda Van (141_)	750	01.86-07.92	25	141 B.000
Ritmo I (138A)	70 1.3	11.83-08.85	48	149 A3._/149 A7._
	75 1.5 i.e.	10.85-05.87	55	149 C1._/138 C2._
Ritmo II (138A)	75 1.5	09.85-12.88	55	138 A2.000
	75 1.5 cat	09.85-12.88	55	149 C1._/138 C2._
Uno (146A/E)	45 1.0	06.86-12.87	32	156 A2._/156 A2._
	45 1.0 i.e.	04.84-12.87	33	156 A2.246
	60 1.1	06.86-12.87	43	146 A4.048
	75 1.5 i.e.	01.89-12.89	55	138 C2.048
LANCIA				
Delta I (831AB0)	1.3	09.79-08.92	55	831 A2._/831 B._
	1.5	11.82-12.92	63	831 A1._/831 B1._
Y10 (156)	1.1 i.e	08.89-06.92	42	156 C.000
	1.1 i.e Allrad	08.89-06.92	42	156 C.000

CL309

PIN

OEM-No.
FIAT 55200112
55200486
55208723
FORD 1535713
1671690
9S51-12029-AA

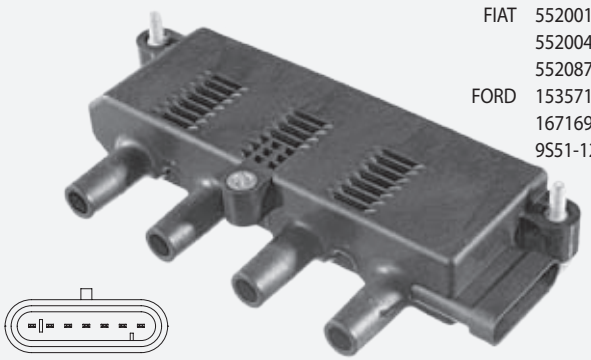

ALFA ROMEO				
Mito (955)	1.4	05.11-	51	955 A9.000
FIAT				
500 (312)	1.2	10.07-	51	169 A4.000
	1.2 LPG	12.10-	51	169 A4.000
500 C (312)	1.2	09.09-	51	169 A4.000
Doblo (119)	1.4	10.05-	57	350 A1.000
Doblo Cargo (223)	1.4	10.05-	57	350 A1.000
Fiorino Van/Combi	1.4 Natural Power	10.09-	57	350 A1.000
Grande Punto (199)	1.2	10.05-	48	199 A4.000

< CL309

FIAT				
Grande Punto (199)	1.2	09.10-	51	169 A4.000
	1.4	06.06-	55	199 A7.000
	1.4	10.05-	57	350 A1.000
Idea	1.4	10.05-	57	350 A1.000
	1.4 LPG	03.09-	57	350 A1.000
Linea (323)	1.4	06.07-	57	350 A1.000
Panda (169)	1.2	03.10-	51	169 A4.000
	1.2 4x4	11.09-	51	169 A4.000
	1.2 LPG	11.10-	51	169 A4.000
	1.4 Natural Power	09.10-	57	350 A1.000
Panda (312)	1.2	02.12-	51	169 A4.000
	1.2 LPG	06.12-	51	169 A4.000
Panda Van (169)	1.4 Natural Power	10.09-	57	350 A1.000
Panda Van (312)	1.2	02.12-	51	169 A4.000
	1.2 LPG	06.12-	51	169 A4.000
Punto (199)	1.2	03.12-	51	169 A4.000
	1.4	03.12-	55	199 A7.000
	1.4	03.12-	57	350 A1.000
	1.4 BiFuel	03.12-	57	350 A1.000
	1.4 Natural Power	03.12-	57	350 A1.000
Punto Evo (199)	1.2	10.09-02.12	48	199 A4.000
	1.2	10.09-02.12	51	169 A4.000
	1.4	07.09-02.12	55	199 A7.000
	1.4	10.09-02.12	57	350 A1.000
	1.4 LPG	06.09-02.12	57	350 A1.000
	1.4 Natural Power	10.09-02.12	57	350 A1.000
Qubo (225)	1.4 Natural Power	10.09-	57	350 A1.000
FORD				
Ka (RU8)	1.2	10.08-	51	FP4
LANCIA				
Musa (350)	1.4	09.05-	57	350 A1.000
	1.4 LPG	11.10-	57	350 A1.000
Ypsilon (843)	1.2	08.10-12.11	51	169 A4.000
	1.4	02.06-12.11	57	350 A1.000
	1.4 LPG	11.10-12.11	57	350 A1.000
Ypsilon (312, 846)	1.2	05.11-	51	169 A4.000
	1.2 BiFuel	05.11-	49	169 A4.000
	1.2 BiFuel	05.11-	51	169 A4.000

CL310

OEM-No.
FIAT 46777288
55246099

1 coil per cylinder

ALFA ROMEO				
Mito (955)	1.4	03.11-	57	955 A1.000
	1.4	09.08-	58	955 A1.000
	1.4	09.08-	70	199 A6.000
FIAT				
500 (312)	0.9	12.13-	44	312 A4._/312 A6._
	0.9	09.12-	48	312 A4.000
	1.4	10.07-	74	169 A3.000
500 C (312)	0.9	09.12-	48	312 A4.000
	1.4	09.09-	74	169 A3.000
	1.4	09.11-	75	169 A3.000
500L	1.4	09.12-	70	843 A1.000
Bravo II (198)	1.4	04.07-	66	192 B2.000
	1.4 LPG	11.09-	66	192 B2.000
Doblo Flatbed (263)	1.4	04.10-	70	843 A1.000
Doblo MPV (152, 263)	1.4	02.10-	70	843 A1.000
Doblo Van/Combi	1.4	02.10-	70	843 A1.000

< CL310

FIAT				
Ducato Van (250)	3.0 Natural Power	04.09-	100	F1CFA_/F1CE_
Grande Punto (199)	1.4 16V	10.05-	70	199 A6.000
Idea	1.2 16V	01.04-	59	188 A5.000
	1.4	12.03-	66	192 B2.000
	1.4 16V	01.04-	70	843 A1.000
Panda (169)	1.4	10.06-	74	169 A3.000
Panda (312)	0.9	12.13-	44	312 A4._/312 A6._
	0.9	02.12-	48	312 A4.000
Panda Van (312)	0.9	02.12-	48	312 A4.000
Punto (188)	1.4	09.03-	70	843 A1.000
	1.4	11.05-	71	199 A6.000
Stilo (192)	1.2 16V	02.02-11.06	59	188 A5.000
	1.4 16V	01.04-11.06	70	843 A1.000
	1.4 16V	03.05-11.06	66	192 B2.000
Stilo Multi Wagon	1.4 16V	01.04-08.08	70	843 A1.000
	1.4 16V	03.05-08.08	66	192 B2.000
LANCIA				
Musa (350)	1.4	10.07-	66	192 B2.000
	1.4	10.04-	70	843 A 1.000
Ypsilon (843)	1.2	10.03-12.11	59	188 A5.000
	1.4 16V	10.03-12.11	70	843 A 1.000

CL311

OEM-No.
FIAT 46777287
46776830

1 coil per cylinder

FIAT				
Stilo (192)	2.4 20V	10.01-11.06	125	192 A2.000

CL312

PIN

OEM-No.
FIAT 46446039
46472440
46480361
7789346

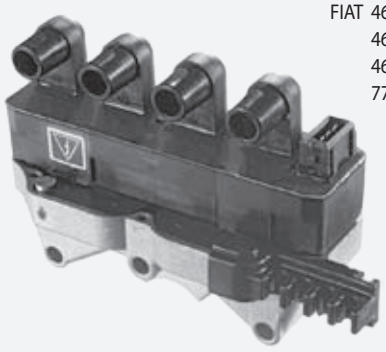

FIAT				
Brava (182)	1.6 16V	10.95-10.01	66	182 A6.000
	1.6 16V	02.96-10.01	76	182 A4.000
Bravo I (182)	1.6 16V	10.95-10.01	66	182 A6.000
	1.6 16V	03.96-10.01	76	182 A4.000
Doblo (119)	1.6 16V	10.01-	76	182 B6.000
	1.6 Natural Power	09.02-	76	182 B6.000
Doblo Cargo (223)	1.6 16V	10.01-	76	182 B6.000
	1.6 Natural Power	09.02-	76	182 B6.000
Marea (185)	1.6 16V	04.97-02.99	75	185 A3.000
	1.6 16V	09.96-05.02	76	182 A4.000
	1.6 16V Bipower	04.99-05.02	76	186 A4._/185 A3._
Marea Weekend	1.6 100 16V	09.96-05.02	76	182 A4.000
Multipla (186)	1.6	09.00-06.10	76	182 B6.000
	1.6 16V	04.02-06.10	70	182 B6.000
	1.6 100 16V	04.99-06.10	76	182 A4.000

< CL312

FIAT				
Multipla (186)	1.6 16V Bipower	04.99-06.10	76	186 A4.000
	1.6 16V Bipower	10.01-06.10	76	182 B6.000
	1.6 16V Blupower	04.99-06.10	70	186 A3.000
	1.6 16V GPL	10.01-06.10	76	182 B6.000
Palio (178BX)	1.6 16V	04.96-	74	178 B3.000
Palio Weekend	1.6 16V	04.96-02.01	74	178 B3.000
	1.6 16V	02.01-	76	182 B6.000
Siena (178_)	1.6 16V	09.98-	78	178 B3.000
LANCIA				
Dedra (835)	1.6 16V	01.96-07.99	76	182 A4.000
Dedra SW (835)	1.6 16V	01.96-07.99	76	182 A4.000
Delta II (836)	1.6 i.e.	03.96-08.99	66	182 A6.000
	1.6 i.e. 16V	01.96-08.99	76	182 A4.000
Lybra (839AX)	1.6 16V	07.99-10.05	76	182 A4.000
Lybra SW (839BX)	1.6 16V	07.99-10.05	76	182 A4.000

CL313

DIN

OEM-No.
FIAT 7746151

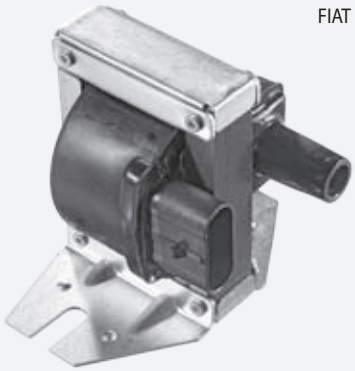

FIAT				
Croma (154)	2000 CHT	07.88-02.89	66	154 A1.000
	2000 i.e.	10.87-08.96	85	154 C3._/834 B._
	2000 i.e.	03.87-09.92	88	834 B.000/154 C3._
	2000 i.e. Turbo	06.87-08.96	110	154 C4.046/834 C._
Fiorino Pick-up	1.6	01.94-05.01	55	146 D6.000/146 C6._
Fiorino Van (146)	70 1.4 i.e.	05.94-10.96	49	146 C5.000/146 D5._
	75 1.5 i.e.	05.88-12.93	55	149 C1.000
	75 1.6 i.e.	10.93-05.01	55	146 D6._/146 C6._
Regata (138)	75 1.5 i.e.	07.86-07.89	55	149 C1._/138 C2._
Tempra (159)	1.4 i.e.	03.92-02.95	51	160 A1.046
	1.6	03.90-04.93	63	159 A3.000
	1.6 i.e.	06.92-08.96	55	159 A3.048
	1.6 i.e.	06.90-07.92	57	159 A3.046
Tempra S.W. (159)	1.4 i.e.	10.92-08.96	51	160 A1.046
	1.6	12.90-04.93	63	159 A3.000
	1.6 i.e.	10.92-08.96	55	159 A3.048
	1.6 i.e.	10.90-08.96	57	159 A3.046
Tipo (160)	1.4	07.87-12.89	52	160 A1.048
	1.4 i.e.	05.89-04.95	51	160 A1.046
	1.6	01.88-10.91	61	160 A2.000
	1.6 i.e.	10.92-04.95	55	159 A3.048
	1.6 i.e.	07.90-01.93	57	159 A3.046
Uno (146A/E)	70 1.4 i.e.	09.89-12.93	51	160 A1.046
	70 1.4 i.e.	09.89-12.93	53	146 C1.000
	70 1.4 S	09.89-10.92	52	160 A1.048
	75 1.5 i.e.	10.85-12.93	55	149 C1.000
LANCIA				
Dedra (835)	1.6 i.e.	08.89-03.93	57	835 A1.046
	1.6 i.e.	08.89-06.94	66	835 A1.000
Delta II (836)	1.4 i.e.	10.94-08.99	51	160 A1.046
Thema (834)	2000 i.e.	09.88-05.92	86	834 B1.000
	2000 i.e.	03.86-09.88	83	834 B.048
	2000 i.e.	09.87-05.92	85	834 B.146
	2000 i.e.Turbo	07.86-05.90	110	834 C.146
Thema SW (834)	2000 Turbo	01.89-03.92	110	834 C.146
Y10 (156)	1.3 i.e. Fire	09.92-12.95	53	156 B._/146 A5._

CL314

OEM-No.
FIAT 46460582

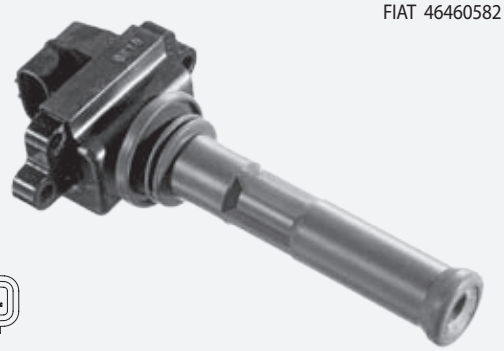

1 coil per cylinder

FIAT				
Barchetta (183)	1.8 16V	04.95-07.99	96	183 A1._/188 A6._
Brava (182)	1.8 GT 16V	10.95-06.98	83	182 A2.000
Bravo I (182)	1.8 GT	10.95-06.98	83	182 A2.000
Coupe (FA/175)	1.8 16V	03.96-05.98	96	183 A1.000
Marea (185)	1.8 115 16V	09.96-06.99	83	182 A2.000
Marea Weekend	1.8 115 16V	09.96-06.99	83	182 A2.000
LANCIA				
Dedra (835)	1.8 16V LE	03.96-07.99	83	182 A2.000
	1.8 GT 16V	03.96-07.99	96	183 A1.000
Dedra SW (835)	1.8 16V LE	03.96-07.99	83	182 A2.000
	1.8 GT 16V	03.96-07.99	96	183 A1.000
Delta II (836)	1.8 i.e.	06.93-08.99	76	835 C2.000

CL315

OEM-No.
FIAT 46473849

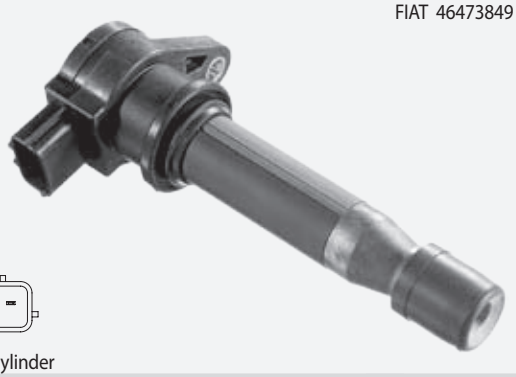

1 coil per cylinder

FIAT				
Barchetta (183)	1.8 16V	07.99-05.05	96	183 A1._/188 A6._
Brava (182)	1.8 GT 16V	06.98-10.01	83	182 A2.000
Bravo I (182)	1.8 GT	06.98-10.01	83	182 A2.000
Coupe (FA/175)	1.8 16V	06.98-08.00	96	183 A1.000
Marea (185)	1.8 115 16V	06.99-05.02	83	182 A2.000
Marea Weekend	1.8 115 16V	06.99-05.02	83	182 A2.000
Punto (188)	1.8 130 HGT	09.99-	96	183 A1._/188 A6._
Stilo (192)	1.6 16V	10.01-11.06	98	192 A4.000
Stilo Multi Wagon	1.8 16V	01.03-08.08	98	192 A4.000
LANCIA				
Delta II (836)	1.8 i.e. 16V	03.96-08.99	83	182 A2.000
	1.8 i.e. 16V GT	03.96-08.99	96	183 A1.000
Lybra (839AX)	1.8 16V	07.99-10.05	96	839 A7._/839 A9._
Lybra SW (839BX)	1.8 16V	07.99-10.05	96	839 A7._/839 A4._

CL316

DIN

OEM-No.
FIAT 4439396

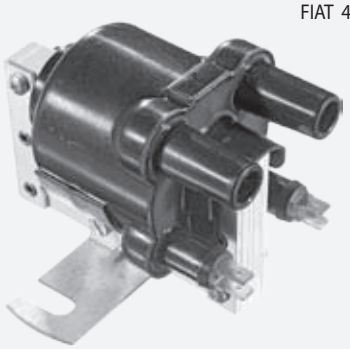

FIAT				
126	650	07.77-09.87	17	126 A1._
	700	09.87-06.96	19	126 A2._
Panda (141A_)	650	01.82-07.04	22	141 A.000

CL317

OEM-No.
FIAT 46403328

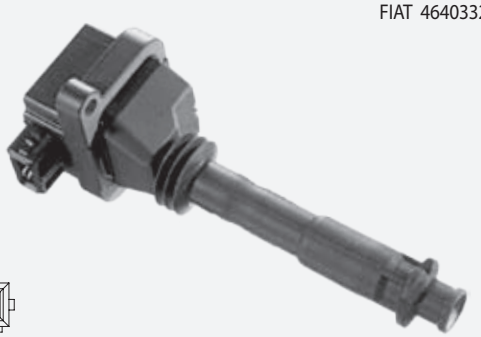

1 coil per cylinder

FIAT				
Bravo I (182)	2.0 HGT 20V	10.95-07.98	108	182 A1.000
Coupe (FA/175)	2.0 20V	08.96-04.98	108	182 A1.000
	2.0 20V Turbo	08.96-08.00	162	175 A3.000
Marea (185)	2.0 150 20V	09.96-04.99	108	182 A1.000
Marea Weekend	2.0 150 20V	09.96-04.99	108	182 A1.000
LANCIA				
Kappa (838A)	2.0 20V	10.94-10.01	107	838 A1.000
	2.0 20V	07.96-10.01	114	838 A6.000
	2.0 20V Turbo	06.98-10.01	162	175 A3.000
	2.4 20V	08.94-10.01	129	838 A2._
Kappa Coupe	2.0 20V	07.96-03.01	114	838 A6.000
	2.0 20V Turbo	06.98-03.01	162	175 A3.000
	2.4 20V	11.96-03.01	129	838 A2.000
Kappa SW (838B)	2.0 20V	07.96-10.01	114	838 A6.000
	2.0 20V Turbo	06.98-10.01	162	175 A3.000
	2.4 20V	07.96-10.01	129	838 A2.000

CL318

OEM-No.
ALFA ROMEO 46467542
FIAT 46467542
LANCIA 46467542

1 coil per cylinder

FIAT				
Bravo I (182)	2.0 HGT 20V	07.98-10.01	113	182 B7.000

< CL318

FIAT				
Coupe (FA/175)	2.0 20V	04.98-08.00	113	182 B3.000
Marea (185)	2.0 150 20V	01.01-05.02	110	185 A8.000
	2.0 155 20V	04.99-01.01	113	182 B7.000
Marea Weekend	2.0 150 20V	01.01-05.02	110	185 A8.000
	2.0 155 20V	04.99-02.03	113	182 B7.000
LANCIA				
Kappa (838A)	2.0 20V	07.96-10.01	114	838 A6.000
	2.4 20V	08.94-10.01	129	838 A2._
Kappa SW (838B)	2.0 20V	07.96-10.01	114	838 A6.000
	2.4 20V	07.96-10.01	129	838 A2.000
Lybra (839AX)	2.0 20V	07.99-09.00	113	182 B7.000
	2.0 20V	09.00-10.05	110	185 A8.000
Lybra SW (839BX)	2.0 20V	07.99-09.00	113	182 B7.000
	2.0 20V	09.00-10.05	110	185 A8.000
Thesis (841AX)	2.0 Turbo	07.02-07.09	136	841 E.000
	2.4	07.02-07.09	125	841 D.000

CL319

PIN

OEM-No.
ALFA ROMEO 60586072
FIAT 60586072

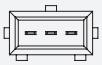

ALFA ROMEO				
145 (930)	1.6 i.e.	10.94-12.96	76	AR 33201
	1.7 i.e. 16V	10.94-12.96	95	AR 33401
146 (930)	1.6 i.e.	12.94-12.96	76	AR 33201
	1.7 i.e. 16V	12.94-12.96	95	AR 33401

CL320

OEM-No.
ALFA ROMEO 60562701
60810690
FIAT 60562701
60810690

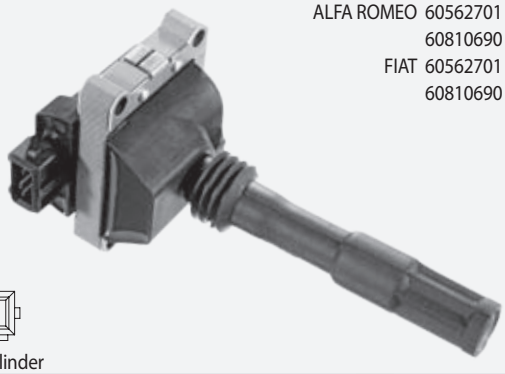

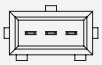

1 coil per cylinder

ALFA ROMEO				
147 (937)	3.2 GTA	02.03-03.10	184	932 A.000
156 (932)	2.5 V6 24V	09.97-12.01	140	AR 32401/_32402
	2.5 V6 24V	10.00-09.05	141	AR 32405
	3.2 GTA	03.02-09.05	184	932 A.000
156 Sportwagon	2.5 V6 24V	05.00-08.03	140	AR 32401
	2.5 V6 24V	10.00-05.06	141	AR 32405
	3.2 GTA	03.02-05.06	184	932 A.000
164 (164)	3.0	04.93-02.95	168	AR 64304
	3.0 24V	09.92-09.98	155	AR 66301/_66302
	3.0 24V Q4	02.94-09.98	170	AR 64308/_64307
	3.0 24V QV	09.92-09.98	171	AR 64304
	3.0 24V QV Allrad	11.92-10.97	171	AR 64307/_64304
166 (936)	3.0 V6 24V	09.98-10.00	140	AR 34201
	3.0 V6 24V	09.98-10.00	166	AR 34301/_34302
	3.0 V6 24V	10.00-06.07	138	AR 36201

< CL320

ALFA ROMEO				
166 (936)	3.0 V6 24V	10.00-06.07	162	AR 36101
	3.2 V6 24V	10.03-06.07	176	936 A.000
GT (937)	3.2 GTA	11.03-09.10	176	936 A.000
GTV (916C_)	3.0 V6 24V	10.96-10.00	162	AR 16102
	3.0 V6 24V	10.00-10.05	160	AR 16105
	3.2 V6 24V	04.03-10.05	176	936 A6.000
Spider (916S_)	3.0 V6	09.94-08.00	160	AR 16105
	3.2 V6	04.03-04.05	176	936 A6.000
LANCIA				
Kappa (838A)	3.0 24V	08.94-10.01	150	838 B.000
Kappa Coupe	3.0 24V	11.96-03.01	150	838 B.000
Kappa SW (838B)	3.0 24V	07.96-10.01	150	838 B.000
Thesis (841AX)	3.0 V6	07.02-07.09	158	841 A.000
	3.2 V6	05.03-07.09	169	841 L.000

CL321

OEM-No.
ALFA ROMEO 46794782
FIAT 46794782

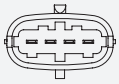

1 coil per cylinder

ALFA ROMEO				
156 (932)	2.0 JTS	03.02-09.05	122	937 A1.000
156 Sportwagon	2.0 JTS	03.02-05.06	122	937 A1.000
159 (939)	1.9 JTS	09.05-11.11	118	939 A6.000
159 Sportwagon	1.9 JTS	03.06-11.11	118	939 A6.000
GT (937)	2.0 JTS	12.06-09.10	119	932 A2.000
	2.0 JTS	11.03-09.10	121	932 A2._/937 A1._
GTV (916C_)	2.0 JTS	04.03-10.05	121	937 A1.000
Spider (916S_)	2.0 JTS	04.03-04.05	121	937 A1.000

CL323

OEM-No.
FIAT 55209603
55213613

1 coil per cylinder

ALFA ROMEO				
Giulietta (940)	1.4 TB	04.10-	88	940 B7._/198 A4._
	1.4 TB	09.14-	110	940 A2.000
Mito (955)	1.4 BiFuel	07.11-	88	198 A4.000
	1.4 TJet	09.08-	88	198 A4.000
	1.4 TJet	09.08-	114	199 A8.000
FIAT				
500 (312)	1.4 Abarth	08.08-	99	312 A1.000
Bravo II (198)	1.4 16V	03.08-	103	198 A7.000
	1.4 T-Jet	09.07-	88	198 A4.000

CL323 ▶

< CL323

FIAT				
Bravo II (198)	1.4 T-Jet	09.07-	110	198 A1.000
Grande Punto (199)	1.4 Abarth	12.07-	114	199 A8.000
	1.4 Abarth	12.07-	132	199 A8._/955 A8._
	1.4 T-Jet	09.07-	88	198 A4.000
Linea (323)	1.4 T-Jet	09.07-	88	198 A4.000
LANCIA				
Delta III (844)	1.4	09.08-	88	198 A4.000
	1.8	01.09-	147	939 B1.000

CL324

OEM-No.
ALFA ROMEO 55212624
FIAT 55212624

1 coil per cylinder

ALFA ROMEO				
Mito (955)	1.4 MultiAir	08.10-	77	955 A6.000
FIAT				
500 (312)	1.4 Abarth	08.08-	132	312 A3.000
	1.4 Abarth	08.08-	139	312 A1.000
	1.4 Abarth	08.08-	118	312 A1.000
Punto Evo (199)	1.4 16V	10.09-02.12	77	955 A6.000

CL325

OEM-No.
FIAT 55231256
55234131

1 coil per cylinder

ALFA ROMEO				
Mito (955)	0.9 TwinAir	07.11-	63	312 A2.000
FIAT				
500 (312)	0.9	07.10-	63	312 A2.000
500 C (312)	0.9	09.09-	63	312 A2.000
500L	0.9 Natural Power	03.13-	63	312 A2.000
Panda (312)	0.9	02.12-	57	312 A7._/312 A2._
	0.9	02.12-	63	312 A2.000
	0.9 4x4	09.12-	63	312 A2.000
	0.9 Natural Power	07.12-	63	312 A2.000
Punto (199)	0.9 BiFuel	03.12-	63	312 A2.000
	0.9 TwinAir Turbo	03.12-	63	312 A2.000
LANCIA				
Ypsilon (312, 846)	0.9 CNG	05.11-	63	312 A2.000
	0.9 Twinair	05.11-	63	312 A2.000

CL326

OEM-No.
FIAT 55229959

1 coil per cylinder

ALFA ROMEO				
Giulietta (940)	1.4 TB	04.10-	120	955 A8.000
	1.4 TB	04.10-	125	940 A2.000
Mito (955)	1.4 TJet	09.08-	110	198 A1.000
	1.4 Turbo MultiAir	10.09-	99	955 A2._/955 A7._
	1.4 Turbo MultiAir	10.09-	120	955 A8.000
	1.4 Turbo MultiAir	10.09-	125	940 A2.000
FIAT				
500X	1.4	09.14-	103	55263624
	1.4	09.14-	100	55263624
	1.4 4x4	02.15-	120	55263623
	1.4 4x4	02.15-	125	55263623
Punto (199)	1.4 Turbo MultiAir	03.12-	99	955 A2.000
Punto Evo (199)	1.4 16V	10.09-02.12	99	955 A2.000
	1.4 Abarth	10.09-	120	955 A8.000
LANCIA				
Delta III (844)	1.4 16V	07.10-	103	198 A7.000

CL400

DIN Ford

OEM-No.
FORD 6181956
8SF12029A1A
E8TZ-12029-A
E9TF-12029-AA
F1VU12029A1A
F5OU12029AA
MAZDA 1E0518100
FSD718100

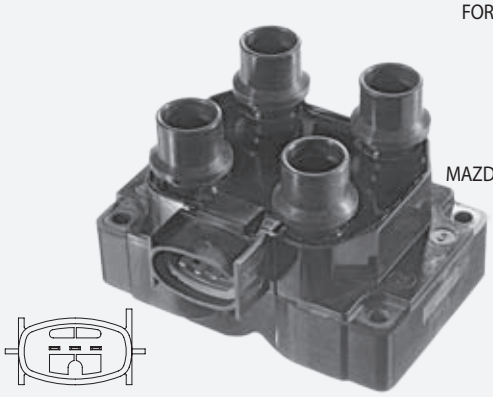

FORD				
Escort '86 Express	1.3	02.86-07.90	44	JLA/JBB/JLB
	1.3	07.88-07.90	46	JBA
Escort '91 Express	1.3	07.90-12.94	46	JBD
	1.4	07.90-12.94	52	F6F/F6G
Escort '95 Express	1.4	01.95-	54	F4B
Escort Classic	1.6 16V	10.98-07.00	66	L1E
Escort Classic Turnier	1.6 16V	02.99-07.00	66	L1E
Escort IV	1.3	07.88-10.90	46	JBA
	1.6 i	08.89-07.90	75	LJB
	1.6 XR3i	01.86-08.89	77	LRB/LR2
Escort IV Cabriolet	1.6 i	08.89-07.90	75	LJB
Escort IV Combi	1.3	01.86-07.90	44	JLA/JBB/JLB
Escort V	1.4	07.90-09.92	52	F6F/F6G
	1.6	07.90-12.92	77	LJF
	1.8 16V XR3i	02.92-12.92	77	RDA
	1.8 16V XR3i	02.92-12.92	96	RQB
Escort V Cabriolet	1.4	07.90-12.92	52	F6F/F6G
	1.6	07.90-12.92	77	LJF
	1.8 16V XR3i	02.92-12.92	77	RDA

< CL400

FORD				
Escort V Cabriolet	1.8 16V XR3i	02.92-12.92	96	RQB
Escort V Combi	1.4	07.90-09.92	52	F6F/F6G
	1.6	07.90-09.92	77	LJF
	1.8 16V	02.92-12.92	77	RDA
Escort VI	1.3	09.92-01.95	44	J6A/J4B
	1.4	09.92-01.95	52	F6F/F6G
	1.4	01.94-01.95	55	F4B/FUH
	1.6 i 16V	01.94-01.95	65	L1H
	1.6 i 16V	09.92-01.95	66	L1E
	1.8 i 16V	09.92-01.95	77	RDA
	1.8 XR3i 16V	09.92-01.95	96	RQB
	1.8 XR3i 16V 4x4	08.93-01.95	77	RDA
	1.8 XR3i 16V 4x4	08.93-01.95	96	RQB
Escort VI Cabriolet	1.4	12.92-04.94	52	F6F/F6G
	1.4 i	07.93-01.95	55	F4B
	1.6 16V XR3i	12.92-01.95	66	L1E
	1.6 i 16V	02.94-01.95	65	L1H
	1.8 16V XR3i	12.92-01.95	77	RDA
	1.8 16V XR3i	12.92-01.95	96	RQB
Escort VI Combi	1.3	09.92-01.95	44	J6A/J4B
	1.4	09.92-01.95	52	F6F/F6G
	1.4	01.94-01.95	55	F4B/FUH
	1.6 i 16V	01.94-01.95	65	L1H
	1.6 i 16V	09.92-01.95	66	L1E
	1.8 i 16V	01.93-01.95	77	RDA
	1.8 i 16V	02.93-01.95	96	RQB
Escort VI Sedan	1.3	08.93-01.95	44	J6A/J4B
	1.4	08.93-04.94	52	F6F/F6G
	1.4	08.93-01.95	55	F4B/FUH
	1.6 i 16V	01.94-01.95	65	L1H
	1.6 i 16V	08.93-01.95	66	L1E/L1K
	1.8 i 16V	08.93-01.95	77	RDA
Escort VII	1.3	01.95-08.98	44	J6A/J4B
	1.4	01.95-10.98	55	F4B
	1.6 16V	01.95-10.98	66	L1E
	1.6 16V 4x4	01.95-10.98	66	L1E
	1.6 i 16V	01.95-08.95	65	L1H
	1.8 16V	01.95-08.95	77	RDA
	1.8 16V	01.95-10.98	85	RKC
Escort VII Cabriolet	1.4	02.95-08.98	55	F4B
	1.6 16V XR3i	02.95-12.96	65	L1H
	1.6 16V XR3i	02.95-09.99	66	L1E
	1.8 16V XR3i	02.95-08.98	77	RDA
	1.8 16V XR3i	10.95-08.98	85	RKC
	1.8 16V XR3i	02.95-08.00	96	RQB
Escort VII Combi	1.3	01.95-08.98	44	J6A/J4B
	1.4	01.95-02.99	55	F4B/FUH
	1.6 16V	01.95-02.99	66	L1E
	1.6 i 16V	01.95-08.95	65	L1H
	1.8 16V	01.95-08.95	77	RDA
	1.8 16V	01.95-02.99	85	RKC
Escort VII Sedan	1.3	01.95-08.98	44	J6A/J4B
	1.4	01.95-02.99	55	F4B/FUH
	1.6 i 16V	01.95-08.95	65	L1H
	1.6 i 16V	01.95-02.99	66	L1E/L1K
	1.8 16V	01.95-08.95	77	RDA
	1.8 16V	01.95-02.99	85	RKC
Fiesta III (GFJ)	1.0	03.89-12.95	33	TLB
	1.1	03.89-12.95	37	G6A
	1.1	03.89-12.95	40	GUD/GUE
	1.3	03.89-12.92	44	JBC
	1.3	03.89-12.95	44	
	1.3 cat	05.91-01.97	44	J6B
	1.4	03.89-12.95	52	F6E
	1.4	03.89-12.95	54	FUG/FUJ
	1.4 cat	03.89-12.95	54	F4A
	1.6	01.89-01.94	65	LUH
	1.6 i 16V	01.94-12.95	65	L1G
	1.6 Turbo	03.90-10.92	96	LHA
	1.6 XR2i	03.89-03.93	76	LJD
	1.6 XR2i	03.89-01.94	81	LJC

< CL400

FORD				
Fiesta III (GFJ)	1.8 16V	02.92-12.95	77	RDB
	1.8 XR2i 16V	02.92-12.95	96	RQC
Fiesta IV (JA_, JB_)	1.0 i	02.97-09.98	38	ZH10JRB
	1.25 i 16V	08.95-04.98	55	DHG/_B/_C/_E/_F/_A
	1.3 i	08.95-08.98	37	JJA/_E/_M/_C/_J/_K
	1.3 i	08.95-08.98	44	J4R/_C/_L/_J/_Q/_T
	1.4 i 16V	04.96-04.98	66	FHE/FHA
Fiesta Van (F_L)	1.3	09.91-02.96	44	J6B
Fiesta Van (J5_, J3_)	1.3	02.96-08.98	44	J4C
	1.4 i	04.96-10.99	66	FHA
Ka (RB_)	1.3 i	06.98-09.98	36	JJH/JJD/JJF/JJG/JJL
	1.3 i	09.96-08.98	44	J4S/_K/_M/_P/_N/_D
Mondeo I (GBP)	1.6 i 16V	07.94-08.96	65	L1J
	1.6 i 16V	02.93-08.96	66	L1F
	1.8 i 16V	07.94-08.96	82	RKB
	1.8 i 16V	02.93-08.96	85	RKA
	1.8 i 16V 4x4	02.93-08.96	85	RKA
	2.0 i 16V	12.94-08.96	97	NGA
	2.0 i 16V	02.93-08.96	100	NGA
	2.0 i 16V 4x4	12.94-08.96	97	NGA
	2.0 i 16V 4x4	04.93-08.96	100	NGA
Mondeo I Combi	1.6 i 16V	07.94-08.96	65	L1J
	1.6 i 16V	04.93-08.96	66	L1F
	1.8 i 16V	07.94-08.96	82	RKB
	1.8 i 16V	04.93-08.96	85	RKA
	1.8 i 16V 4x4	04.93-08.96	85	RKA
	2.0 i 16V	01.93-08.96	97	NGA
	2.0 i 16V	04.93-08.96	100	NGA
	2.0 i 16V 4x4	12.94-08.96	97	NGA
	2.0 i 16V 4x4	04.93-08.96	100	NGA
Mondeo I Sedan	1.6 i 16V	07.94-08.96	65	L1J
	1.6 i 16V	02.93-08.96	66	L1F
	1.8 4x4	02.93-08.96	85	RKA
	1.8 i 16V	01.94-08.96	82	RKB
	1.8 i 16V	02.93-08.96	85	RKA
	2.0 i 16V	02.93-08.96	100	NGA
	2.0 i 16V 4x4	12.94-08.96	97	NGA
Mondeo II (BAP)	1.6 i	08.96-08.98	66	L1J
	1.8 i	08.96-08.98	85	RKK/_J/_B/_F/_H
	2.0 i	08.96-08.98	96	NGA/_B/_D/_C
Mondeo II Combi	1.6 i	08.96-08.98	66	L1J
	1.8 i	08.96-08.98	85	RKK/_J/_B/_F/_H
	2.0 i	08.96-08.98	96	NGA/_B/_D/_C
Mondeo II Sedan	1.6 i	08.96-08.98	66	L1J
	1.8 i	08.96-08.98	85	RKK/_J/_B/_F/_H
	2.0 i	08.96-08.98	96	NGA/_B/_D/_C
Orion II (AFF)	1.6	12.85-07.90	66	LUC
	1.6 i	08.89-07.90	75	LJB
Orion III (GAL)	1.3	07.90-12.93	44	J6A/J4B
	1.4	07.90-12.93	52	F6F/F6G
	1.4	07.90-12.93	54	FUH
	1.6	07.90-12.92	66	LUJ/LUK
	1.6 i	07.90-09.92	77	LJF
	1.6 i 16V	07.92-12.93	66	L1E/L1K
	1.8 i 16V	02.92-12.93	77	RDA
	1.8 i 16V	01.92-12.93	96	RQB
Puma (EC_)	1.4 16V	11.97-04.98	66	FHD
	1.7 16V	03.97-04.98	92	MHB/MHA
	1.7 ST 160	06.99-04.00	118	
Sierra	1.8	05.88-02.93	64	R2C/R6A
Sierra CC	1.8	05.88-02.93	64	R2C/R6A
Sierra Combi	1.8	05.88-02.93	64	R2C/R6A
MAZDA				
121 III (JASM, JBSM)	1.25	03.96-04.03	55	DHG/DHF
	1.3	03.96-04.03	37	JJM/JJK
	1.3	03.96-04.03	44	J4R/J4T
626 V (GF)	1.8	05.97-12.99	66	FPY3
	1.8	12.99-10.02	74	FP9A
	2.0	05.97-10.02	85	FS
	2.0	04.98-10.02	100	FS2C
626 V Hatchback (GF)	1.8	05.97-12.99	66	FPY3

< CL400

MAZDA				
626 V Hatchback (GF)	1.8	12.99-10.02	74	FP
	2.0	05.97-10.02	85	FS
	2.0 H.P.	02.98-10.02	100	FS2C
626 V Station Wagon	1.8	02.98-01.00	66	FPY3
	1.8	01.00-10.02	74	FP9A
	2.0	02.98-10.02	85	FS
	2.0 H.P.	02.98-10.02	100	FS2C

CL401

PIN

OEM-No.
FORD 1075786
1130402
1317972
988F 12029 A
988F1209AB
988F1209AC
1S7G12029AC
YM2F12029AB

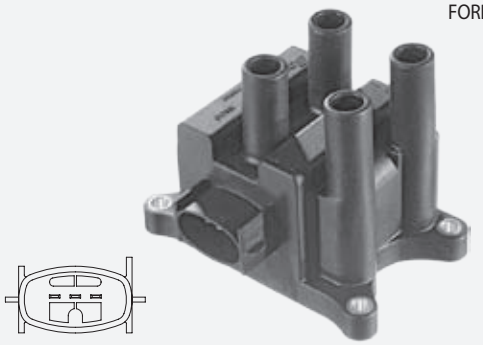

„old design“ (CL409-new design)

FORD				
Cougar (EC_)	2.0 16V	08.98-12.01	96	EDBB/_C/_D/_BA
Escort VII	1.3	09.98-10.98	44	J4B
Escort VII Combi	1.3	09.98-01.99	44	J4B
Escort VII Sedan	1.3	09.98-02.99	44	J4B
Fiesta IV (JA_, JB_)	1.0 i	09.98-09.99	38	ZH10JRB
	1.25 i 16V	05.98-01.02	55	DHG/B/_C/_E/_F/_A
	1.3 i	09.98-01.02	37	JJA/_E/_M/_C/_J/_K
	1.3 i	09.98-01.02	44	J4R/_C/_L/_J/_Q/_T
	1.4 i 16V	05.98-01.02	66	FHE/FHA
	1.6 16V Sport	02.00-01.02	76	L1V/L1T
Fiesta V (JH_, JD_)	1.3	11.01-06.08	44	BAJA
	1.3	11.01-06.08	51	A9JA/A9JB
	1.4 16V	11.01-01.05	59	FXJB/FXJA
	1.6 16V	11.01-01.05	74	FYJA/FYJB
Fiesta V Van	1.3	10.03-07.05	51	A9JA/A9JB
Fiesta Van (J5_, J3_)	1.3	09.98-	44	J4C
Focus (DAW, DBW)	1.4 16V	10.98-11.04	55	FXDA/_D/_C/_B
	1.6 16V	10.98-11.04	74	FYDH/_A/_B/_D/_C
	1.8 16V	10.98-11.04	85	EYDD/C/_E/_L/_F/_G
	2.0 16V	10.98-11.04	96	EDDC/_B/_D/_F
	2.0 RS	10.02-11.04	158	HMDA
	2.0 ST170	03.02-11.04	127	ALDA
Focus Combi (DNW)	1.4 16V	02.99-11.04	55	FXDA/_D/_C/_B
	1.6 16V	02.99-11.04	74	FYDH/_A/_B/_D/_C
	1.8 16V	02.99-11.04	85	EYDD/C/_E/_L/_F/_G
	2.0 16V	02.99-11.04	96	EDDC/_B/_D/_F
	2.0 ST170	08.02-11.04	127	ALDA
Focus Sedan (DFW)	1.4 16V	02.99-11.04	55	FXDA/_D/_C/_B
	1.6 16V	02.99-11.04	74	FYDH/_A/_B/_D/_C
	1.8 16V	02.99-11.04	85	EYDD/C/_E/_L/_F/_G
	2.0 16V	02.99-11.04	96	EDDC/_B/_D/_F
Fusion (JU_)	1.4	08.02-01.05	59	FXJC/FXJB/FXJA
	1.6	08.02-01.05	74	FYJC/FYJA/FYJB
Galaxy (WGR)	2.3 16V	09.01-05.06	103	E5SB
	2.3 16V	04.00-05.06	107	E5SA
Ka (RB_)	1.0 i	07.97-09.99	38	ZH10JRB
	1.0 i	09.99-11.08	48	
	1.3 i	09.98-11.08	36	JJH/_D/_F/_G/_L
	1.3 i	09.98-10.02	37	JJB
	1.3 i	09.96-11.08	44	J4S/_K/_M/_P/_N/_D
	1.3 i	08.02-11.08	51	A9B/A9A
	1.6 i	07.03-11.08	70	CDC/CDB
Maverick	2.0 16V	02.01-	91	YF
Mondeo II (BAP)	1.6 i	09.98-09.00	66	L1J
	1.6 i 16V	05.98-09.00	70	L1N/L1L/L1Q
	1.8 i	09.98-09.00	85	RKK/_J/_B/_F/_H

< CL401

FORD				
Mondeo II (BAP)	2.0 i	09.98-09.00	96	NGA/_B/_D/_C
Mondeo II Combi	1.6 i	09.98-09.00	66	L1J
	1.6 i 16V	05.98-09.00	70	L1N/L1L/L1Q
	1.8 i	09.98-09.00	85	RKK/_J/_B/_F/_H
	2.0 i	09.98-09.00	96	NGA/_B/_D/_C
Mondeo II Sedan	1.6 i	09.98-09.00	66	L1J
	1.6 i 16V	05.98-09.00	70	L1N/L1L/L1Q
	1.8 i	09.98-09.00	85	RKK/_J/_B/_F/_H
	2.0 i	09.98-09.00	96	NGA/_B/_D/_C
Puma (EC_)	1.4 16V	05.98-10.00	66	FHD/FHF
	1.6 16V	08.00-06.02	76	L1W
	1.7 16V	05.98-06.02	92	MHB/MHA
	1.7 ST 160	05.00-06.02	118	
Street Ka (RL2)	1.6	05.03-07.05	70	CDRA/CDRB
Tourneo Connect	1.8 16V	06.02-12.13	85	EYPC/_A/_D
Transit Connect	1.8 16V	06.02-12.13	85	EYPC/_A/_D
MAZDA				
121 III (JASM, JBSM)	1.25	03.96-04.03	55	DHG/DHF
	1.3	03.96-04.03	37	JJM/JJK
	1.3	03.96-04.03	44	J4R/J4T
2 (DY)	1.25	04.03-02.05	55	FUJA
	1.4	04.03-02.05	59	FXJA
	1.6	04.03-02.05	74	FYJA
Tribute (EP)	2.0	03.00-05.08	91	YF
	2.0 4WD	03.00-05.08	91	YF

CL402

DIN Ford

OEM-No.
FORD 7053859
95WF 12029 BA

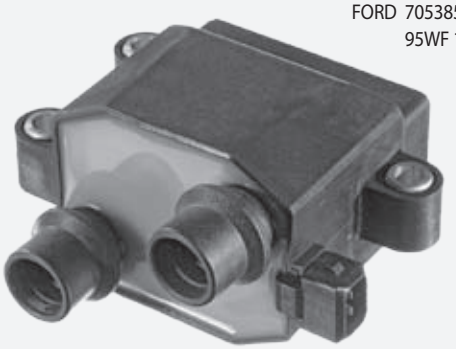

FORD				
Galaxy (WGR)	2.0 i	11.95-03.00	85	NSE
Granada	2.0	08.79-08.85	74	NEP
Scorpio I	2.0 i	04.85-02.92	85	NRI/NRA
Scorpio II	2.0 i	10.94-08.98	85	NSD
Scorpio II Combi	2.0 i	10.94-08.98	85	NSD
Transit Bus (E_ _)	2.0	09.95-03.00	84	NSF/NSG
Transit Flatbed (E_ _)	2.0	08.94-03.00	84	NSF/NSG
Transit Van (E_ _)	2.0	06.94-03.00	84	NSF/NSG

CL403

PIN

OEM-No.
FORD 1350562
1459278
4M5G 12029 Z
VOLVO 30731416
30731419
MAZDA C401-18-100A

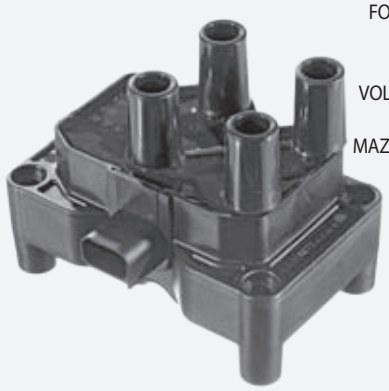

FORD				
B-Max (JK)	1.4	10.12-	66	SPJD

< CL403

FORD				
B-Max (JK)	1.4 LPG	08.13-	63	RTJC
	1.4 LPG	08.13-	66	RTJC
	1.6 Ti	10.12-	77	IQJA
B-Max Van	1.4	10.12-	66	SPJD
	1.6 Ti	10.12-	77	IQJA
C-Max (DM2)	1.6	02.07-09.10	74	SHDA/HWDB/HWDA
C-Max II	1.6 Flexifuel	02.11-	88	MUDA
	1.6 LPG	02.12-	88	MUDA
	1.6 Ti	12.10-	63	XTDA
	1.6 Ti	12.10-	77	IQDB/IQDA
	1.6 Ti	02.12-	88	MUDA
	1.6 Ti	12.10-	92	PNDA
C-Max II (DXA/C_ _)	1.6 LPG	02.12-	86	MUDA
Fiesta V (JH_, JD_)	1.25 16V	03.05-06.08	51	M7JA/M7JB
	1.25 16V	03.05-06.08	55	FUJA/FUJB
	1.4 16V	02.05-06.08	59	FXJB/FXJA
	1.6 16V	02.05-06.08	74	FYJA/FYJB
Fiesta VI	1.25	06.08-	44	STJA/STJB
	1.25	06.08-	60	SNJA/SNJB
	1.4	06.08-	71	SPJA/SPJC
	1.4 LPG	01.09-	71	RTJA/RTJB
	1.6 Ti	09.12-	77	IQJA
	1.6 Ti	06.08-	88	HXJB/HXJA
	1.6 Ti	12.10-	99	U5JA
Fiesta VI Van	1.25	01.09-	60	SNJA/SNJB
Focus C-Max	1.6	03.05-03.07	74	HWDB/HWDA
	1.6 Ti	03.05-03.07	85	SIDA/HXDA
Focus II (DA_)	1.4	03.05-09.12	59	ASDB/ASDA
	1.6	03.05-09.12	74	SHDA/HWDB/_DA
	1.6 LPG	10.09-07.11	85	SIDA
	1.6 Ti	03.05-09.12	85	HXDB/SIDA/HXDA
Focus II Cabriolet	1.6	10.06-07.11	74	SHDA/HWDB/_DA
Focus II Combi (DA_)	1.4	03.05-09.12	59	ASDB/ASDA
	1.6	03.05-07.11	74	SHDA/HWDB/_DA
	1.6 LPG	10.09-09.12	85	SIDA
	1.6 Ti	03.05-01.08	85	HXDB/SIDA/HXDA
Focus II Sedan (DA_)	1.4	04.05-09.12	59	ASDB/ASDA
	1.6	04.05-01.08	74	SHDA/HWDB/_DA
	1.6 Ti	04.05-01.08	85	HXDB/SIDA/HXDA
Focus III	1.6 Flexifuel	04.11-	88	MUDA
	1.6 LPG	02.12-	88	MUDA
	1.6 LPG	02.12-	86	MUDA
	1.6 Ti	08.11-	63	XTDA
	1.6 Ti	04.11-	77	IQDB
	1.6 Ti	02.12-	88	MUDA
	1.6 Ti	04.11-	92	PNDA
Focus III Sedan	1.6 Flexifuel	04.11-	88	MUDA
	1.6 Ti	08.11-	63	XTDA
	1.6 Ti	04.11-	77	IQDB
	1.6 Ti	04.11-	92	PNDA
Focus III Turnier	1.6 Flexifuel	05.11-	88	MUDA
	1.6 LPG	02.12-	88	MUDA
	1.6 LPG	02.12-	86	MUDA
	1.6 Ti	08.11-	63	XTDA
	1.6 Ti	05.11-	77	IQDB
	1.6 Ti	02.12-	88	MUDA
	1.6 Ti	05.11-	92	PNDA
Fusion (JU_)	1.25	08.04-12.12	55	FUJA/FUJB
	1.4	02.05-12.12	59	FXJC/FXJB/FXJA
	1.6	02.05-11.08	74	FYJC/FYJA/FYJB
Grand C-Max	1.6 Ti	12.10-	77	IQDB/IQDA
	1.6 Ti	12.10-	92	PNDA
Mondeo IV	1.6 Ti	03.07-09.14	81	RHBA
	1.6 Ti	07.10-09.14	88	KGBA
	1.6 Ti	03.07-09.14	92	PNBA
Mondeo IV Sedan	1.6 Ti	03.07-09.14	92	PNBA
Mondeo IV Turnier	1.6 Ti	03.07-12.12	81	RHBA
	1.6 Ti	07.10-09.14	88	KGBA
	1.6 Ti	03.07-12.10	92	PNBA
MAZDA				
2 (DY)	1.25	02.05-	55	FUJA

< CL403

MAZDA				
2 (DY)	1.4	02.05-	59	FXJA
	1.6	02.05-	74	FYJA
VOLVO				
C30	1.6	10.06-12.12	74	B 4164 S3
S40 II (MS)	1.6	01.05-	74	B 4164 S3
V50 (MW)	1.6	01.05-	74	B 4164 S3

CL404

DIN Ford

OEM-No.
FORD 6485687
6485688
91XF 12029 AA
91XF 12029 BA

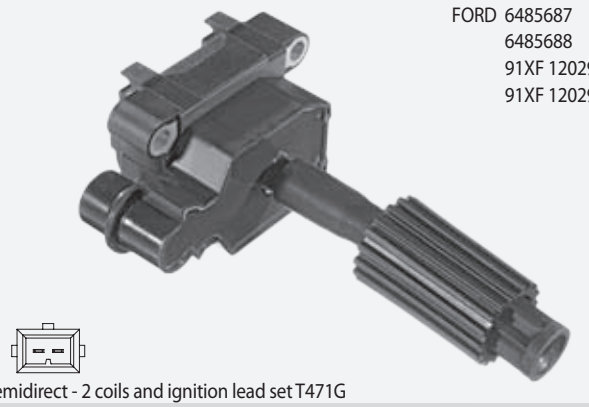

semidirect - 2 coils and ignition lead set T471G

FORD				
Escort V	RS 2000	05.91-12.92	110	N7A
Escort VI	RS 2000	09.92-01.95	110	N7A
	RS 2000 4x4	08.93-01.95	110	N7A
Escort VII	RS 2000	02.95-02.98	110	N7A
	RS 2000 4x4	02.95-10.98	110	N7A
Galaxy (WGR)	2.3 16V	01.97-03.00	107	Y5B
Scorpio II	2.0 i 16V	10.94-08.98	100	N3A
	2.3 i 16V	06.96-08.98	108	Y5A
Scorpio II Combi	2.0 i 16V	10.94-08.98	100	N3A
	2.3 i 16V	06.96-08.98	108	Y5A
Transit Bus	2.3 16V [RWD]	08.00-05.06	107	E5FC/E5FA
Transit Flatbed	2.3 16V	04.01-05.06	107	E5FC/E5FA
Transit Van	2.3 16V [RWD]	04.01-05.06	107	E5FC/E5FA

CL405

OEM-No.
FORD 1224925
1314271
1322402
1578771
4M5G 12A366 B

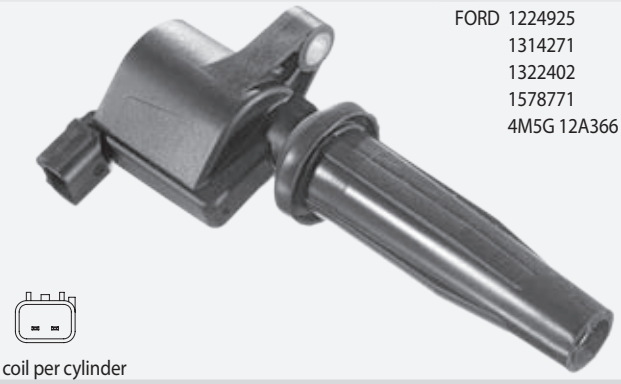

1 coil per cylinder

FORD				
C-Max (DM2)	1.8	02.07-09.10	92	QQDA/QQDB
	1.8 Flexifuel	02.07-09.10	92	Q7DA
	2.0	02.07-09.10	107	AODA/AODB/SYDA
	2.0 CNG	04.09-09.10	107	SYDA
	2.0 LPG	06.08-09.10	107	SYDA
Focus C-Max	1.8	10.03-03.07	88	CSDB/CSDA
	1.8	04.04-03.07	92	QQDA/QQDB/Q7DA
	1.8 Flexifuel	01.06-03.07	92	Q7DA
	2.0	03.04-03.07	107	AODA/AODB/SYDA
Focus II (DA_)	1.8	03.06-09.12	92	QQDB
	1.8 Flexifuel	01.06-09.12	92	Q7DA
	2.0	11.04-01.08	107	AODA/AODB
	2.0 CNG	04.09-07.11	107	SYDA
	2.0 LPG	06.08-07.11	107	SYDA
Focus II Cabriolet	2.0	10.06-07.11	107	AODA/AODB

CL405 ▶

< CL405

FORD				
Focus II Combi (DA_)	1.8	03.06-09.12	92	QQDB/Q7DA
	1.8 Flexifuel	01.06-09.12	92	Q7DA
	2.0	11.04-01.08	107	AODA/AODB
	2.0 LPG	06.08-07.11	107	SYDA
Focus II Sedan (DA_)	1.8	03.06-01.08	92	QQDB
	1.8 Flexifuel	06.06-07.11	92	Q7DA
	2.0	04.05-07.11	107	AODA/AODB
Galaxy (WA6)	2.0	05.06-06.15	107	AOWB/AOWA
	2.0 EcoBoost	05.11-06.15	149	TNWA
Mondeo IV	2.0	03.07-09.14	107	AOBC/AOBA/TBBA
	2.0 Flexifuel	03.09-09.14	107	TBBB/TBBA
	2.0 LPG	07.09-09.14	107	TBBA
	2.0 SCTi	05.11-09.14	149	TNBA
Mondeo IV Sedan	2.0	03.07-09.14	107	AOBC/AOBA/TBBA
	2.0 Flexifuel	03.09-09.14	107	TBBB/TBBA
	2.0 LPG	07.09-09.14	107	TBBA
Mondeo IV Turnier	2.0	03.07-09.14	107	AOBC/AOBA/TBBA
	2.0 Flexifuel	03.09-09.14	107	TBBB/TBBA
	2.0 LPG	07.09-09.14	107	TBBA
	2.0 SCTi	05.11-09.14	149	TNBA
S-Max (WA6)	2.0	05.06-	107	AOWB/AOWA
	2.0 EcoBoost	05.11-	149	TNWA
	2.0 Flexifuel	05.06-	107	TBWA/TBWB
Transit Flatbed	2.3 16V [RWD]	04.06-08.14	107	GZFA/GZFC/GZFB
	2.3 16V CNG [RWD]	04.06-08.14	100	GZFA
	2.3 16V LPG [RWD]	04.06-08.14	107	GZFA
Transit Van	2.3 16V [RWD]	04.06-08.14	107	GZFA/GZFC/GZFB
	2.3 16V CNG [RWD]	04.06-08.14	100	GZFA
	2.3 16V LPG [RWD]	04.06-08.14	107	GZFA
MAZDA				
3 (BK)	2.0	10.03-06.09	110	LF17
3 Sedan (BK)	2.0	02.04-	110	LF17
Tribute (EP)	2.3 AWD	04.04-05.08	110	L3-VE
VOLVO				
C30	1.8	10.06-12.12	92	B 4184 S11
	1.8 FlexFuel	01.07-12.12	92	B 4184 S8
	2.0	10.06-12.12	107	B 4204 S3
	2.0 FlexFuel	01.10-12.12	107	B 4204 S4
S40 II (MS)	1.8	04.04-	92	B 4184 S11
	1.8 FlexFuel	01.06-	92	B 4184 S8
	2.0	10.06-	107	B 4204 S3
S80 II (AS)	2.0	01.08-	107	B 4204 S3
	2.0 FlexFuel	01.08-	107	B 4204 S4
V50 (MW)	1.8	04.04-	92	B 4184 S11
	1.8 FlexFuel	01.05-	92	B 4184 S8
	2.0	10.06-	107	B 4204 S3
	2.0 FlexFuel	01.10-	107	B 4204 S4
V70 III (BW)	2.0	10.07-	107	B 4204 S3
	2.0 FlexiFuel	01.08-	107	B 4204 S4

CL406

PIN

OEM-No.
FORD 1350567
1458400
4S7G 12029 AA
4S7G 12029 AB

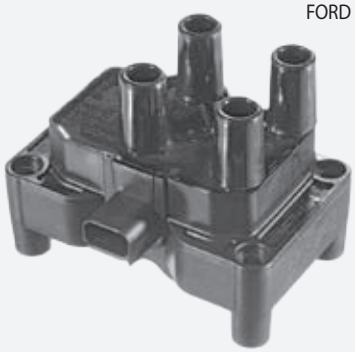

FORD				
Fiesta V (JH_, JD_)	2.0 ST150	03.05-06.08	110	N4JB
Mondeo III	1.8 16V	03.05-03.07	81	CGBB/CGBA
	1.8 16V	03.05-03.07	92	CHBA/CHBB
	2.0 16V	03.05-03.07	107	CJBA/CJBB

< CL406

FORD				
Mondeo III Combi	1.8 16V	03.05-03.07	81	CGBB/CGBA
	1.8 16V	03.05-03.07	92	CHBA/CHBB
	2.0 16V	03.05-03.07	107	CJBA/CJBB
Mondeo III Sedan	1.8 16V	03.05-03.07	81	CGBB/CGBA
	1.8 16V	03.05-03.07	92	CHBA/CHBB
	2.0 16V	03.05-03.07	107	CJBA/CJBB

CL407

OEM-No.
FORD 1223293
1360553
2S7G 12029 AB
2S7G 12029 AC
2S7G 12029 AD

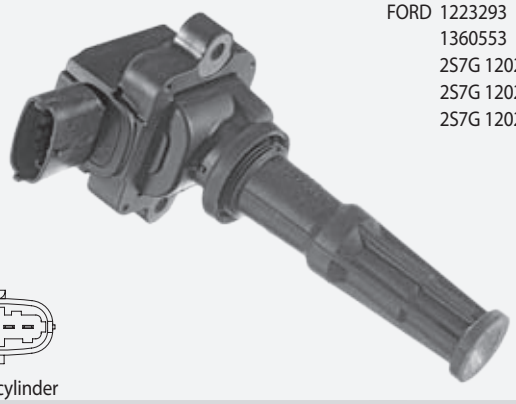

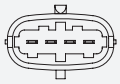

1 coil per cylinder

FORD				
Mondeo III	1.8 SCi	06.03-03.07	96	CFBA
Mondeo III Combi	1.8 SCi	06.03-03.07	96	CFBA
Mondeo III Sedan	1.8 SCi	06.03-03.07	96	CFBA

CL408

DIN Ford

OEM-No.
FORD 6489415
6630365
6958305
919F 12029 AA
E9SF 12029 AA
E9SZ 12029 A

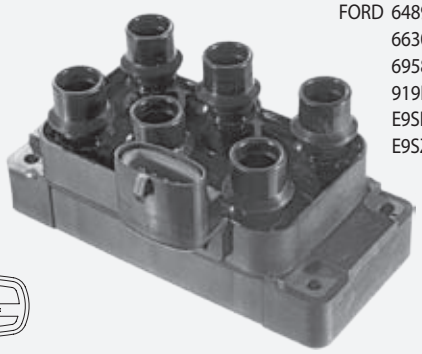

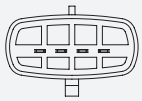

FORD				
Cougar (EC_)	2.5 ST 200	01.00-12.01	151	SGA
	2.5 V6 24V	08.98-12.01	125	LCBA
	2.5 V6 24V	06.00-12.01	125	LCBC/LCBB/LCBE
Mondeo I	2.5 i 24V	07.94-08.96	125	SEA
Mondeo I Combi	2.5 i 24V	07.94-08.96	125	SEA
Mondeo I Sedan	2.5 i 24V	07.94-08.96	125	SEA
Mondeo II	2.5 24V	08.96-09.00	125	SEA
	2.5 24V	06.00-09.00	125	SEB/SEC
	2.5 ST 200	05.99-09.00	151	SGA
Mondeo II Combi	2.5 24V	08.96-09.00	125	SEA
	2.5 24V	10.99-09.00	125	SEB/SEC
	2.5 ST 200	05.99-09.00	151	SGA
Mondeo II Sedan	2.5 24V	08.96-09.00	125	SEA
	2.5 24V	06.00-09.00	125	SEB/LCBD/SEC
	2.5 ST 200	05.99-09.00	151	SGA
Scorpio I	2.9 i 24V	04.91-09.94	143	BOA
Scorpio I Combi	2.9 24V	08.93-09.94	143	BOA
Scorpio I Sedan	2.9 i 24V	04.91-09.94	143	BOA
Scorpio II	2.9 i 24V	10.94-08.98	152	BOB
Scorpio II Combi	2.9 i 24V	10.94-08.98	152	BOB
Windstar (A3)	3.0 V6	03.95-02.99	109	

CL409

PIN

OEM-No.
FORD 1119835
1319788
1S7G 12029 AB
1S7G 12029 AC
988F12029AD
YM2F12029AB

CL409-new design (CL 401 „old design")

FORD				
Cougar (EC_)	2.0 16V	08.98-12.01	96	EDBB/_C/_D/_A
Escort VII	1.3	09.98-10.98	44	J4B
Escort VII Combi	1.3	09.98-01.99	44	J4B
Escort VII Sedan	1.3	09.98-02.99	44	J4B
Fiesta IV	1.25 i 16V	05.98-01.02	55	DHG/B/_C/_E/_F/_A
	1.3 i	09.98-01.02	37	JJA/_E/_M/_C/_J/_K
	1.3 i	09.98-01.02	44	J4R/_C/_L/_J/_Q/_T
	1.4 i 16V	05.98-01.02	66	FHE/FHA
	1.6 16V Sport	02.00-01.02	76	L1V/L1T
Fiesta V	1.25 16V	05.02-02.05	51	M7JA/M7JB
	1.25 16V	05.02-02.05	55	FUJA/FUJB
	1.3	11.01-06.08	44	BAJA
	1.3	11.01-06.08	51	A9JA/A9JB
	1.4 16V	11.01-01.05	59	FXJB/FXJA
	1.6 16V	11.01-01.05	74	FYJA/FYJB
Fiesta V Van	1.3	10.03-07.05	51	A9JA/A9JB
Focus (DAW, DBW)	1.6 16V	10.98-11.04	74	FYDH/_A/_B/_D/_C
	1.8 16V	10.98-11.04	85	EYDD/C/_E/_L/_F/_G
	2.0 16V	10.98-11.04	96	EDDC/_B/_D/_F
	2.0 RS	10.02-11.04	158	HMDA
	2.0 ST170	03.02-11.04	127	ALDA
Focus Combi (DNW)	2.0 16V	02.99-11.04	96	EDDC/_B/_D/_F
Focus Sedan (DFW)	2.0 16V	02.99-11.04	96	EDDC/_B/_D/_F
Focus C-Max	1.6	10.03-02.05	74	HWDB/HWDA
	1.6 Ti	08.04-02.05	85	SIDA/HXDA
Focus II (DA_)	1.4	11.04-02.05	59	ASDB/ASDA
	1.6	11.04-02.05	74	SHDA/HWDB/HWDA
	1.6 Ti	11.04-02.05	85	HXDB/SIDA/HXDA
Focus II Combi (DA_)	1.4	11.04-02.05	59	ASDB/ASDA
	1.6	11.04-02.05	74	SHDA/HWDB/HWDA
	1.6 Ti	11.04-02.05	85	HXDB/SIDA/HXDA
Fusion (JU_)	1.4	08.02-01.05	59	FXJC/FXJB/FXJA
	1.6	08.02-01.05	74	FYJC/FYJA/FYJB
Galaxy (WGR)	2.0 i	02.01-05.06	85	ZVSA
Ka (RB_)	1.3 i	09.98-11.08	36	JJH/JJD/JJF/JJG/JJL
	1.3 i	09.98-10.02	37	JJB
	1.3 i	09.96-11.08	44	J4S/_K/_M/_P/_N/_D
	1.3 i	08.02-11.08	51	A9B/A9A
	1.6 i	07.03-11.08	70	CDC/CDB
Maverick	2.0 16V	02.01-	91	YF
Mondeo II	1.6 i	09.98-09.00	66	L1J
	1.6 i 16V	05.98-09.00	70	L1N/L1L/L1Q
	1.8 i	09.98-09.00	85	RKK/_J/_B/_F/_H
	2.0 i	09.98-09.00	96	NGA/_B/_D/_C
Mondeo II Combi	1.6 i	09.98-09.00	66	L1J
	1.6 i 16V	05.98-09.00	70	L1N/L1L/L1Q
	1.8 i	09.98-09.00	85	RKK/_J/_B/_F/_H
	2.0 i	09.98-09.00	96	NGA/_B/_D/_C
Mondeo II Sedan	1.6 i	09.98-09.00	66	L1J
	1.6 i 16V	05.98-09.00	70	L1N/L1L/L1Q
	1.8 i	09.98-09.00	85	RKK/_J/_B/_F/_H
	2.0 i	09.98-09.00	96	NGA/_B/_D/_C
Mondeo III	1.8 16V	10.00-02.05	81	CGBB/CGBA
	1.8 16V	10.00-02.05	92	CHBA/CHBB
	2.0 16V	10.00-02.05	107	CJBA/CJBB
Mondeo III Combi	1.8 16V	10.00-02.05	81	CGBB/CGBA

< CL409

FORD				
Mondeo III Combi	1.8 16V	10.00-02.05	92	CHBA/CHBB
	2.0 16V	10.00-02.05	107	CJBA/CJBB
Mondeo III Sedan	1.8 16V	10.00-02.05	81	CGBB/CGBA
	1.8 16V	10.00-02.05	92	CHBA/CHBB
	2.0 16V	10.00-02.05	107	CJBA/CJBB
Puma (EC_)	1.4 16V	05.98-10.00	66	FHD/FHF
	1.6 16V	08.00-06.02	76	L1W
Street Ka (RL2)	1.6	05.03-07.05	70	CDRA/CDRB

CL410

OEM-No.
FORD 1371601
6M5G12029AA
VOLVO 8677837
30713417

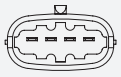

1 coil per cylinder

FORD				
Focus II (DA_)	2.5 RS	01.09-07.11	224	JZDA
	2.5 RS 500	05.10-07.11	257	JZDA
	2.5 ST	10.05-09.12	166	HYDA
Kuga I	2.5	03.09-	147	HYDB/HYDC
	2.5 4x4	03.09-	147	HYDB
Mondeo IV	2.5	03.07-09.14	162	HUBA
Mondeo IV Sedan	2.5	03.07-09.14	162	HUBA
Mondeo IV Turnier	2.5	03.07-12.12	162	HUBA
S-Max (WA6)	2.5 ST	05.06-	162	HUWA
VOLVO				
C30	2.4 i	10.06-12.12	125	B 5244 S4
	2.5 T5	10.06-12.12	162	B 5254 T3
	2.5 T5	03.07-12.12	169	B 5254 T7
C70 II Cabriolet	2.4	03.06-	103	B 5244 S5
	2.4 i	03.06-	125	B 5244 S4
	2.5 T5	03.06-	162	B 5254 T3
	2.5 T5	03.07-	169	B 5254 T7
S40 II (MS)	2.4	01.04-	103	B 5244 S5
	2.4	01.04-	125	B 5244 S4
	2.5 T5	01.04-	162	B 5254 T3
	2.5 T5	03.07-	169	B 5254 T7
	2.5 T5 AWD	04.04-	162	B 5254 T3
	2.5 T5 AWD	03.07-	169	B 5254 T7
S60 I	2.0 T	08.04-04.10	132	B 5204 T5
	2.4 T	11.00-04.10	147	B 5244 T3
	2.4 T AWD	11.01-04.10	147	B 5244 T3
	2.4 T5	04.04-04.10	191	B 5244 T5
	R 2.5 T AWD	03.03-04.10	221	B 5254 T4
S60 II	2.0 T	12.13-	132	B 5204 T8
S80 I (TS, XY)	2.0 T	08.04-07.06	132	B 5204 T5
S80 II (AS)	2.5 T	03.06-	147	B 5254 T6
	2.5 T	01.10-	170	B 5254 T10
	2.5 T FlexFuel	05.08-	147	B 5254 T8
	2.5 T FlexFuel	01.10-	170	B 5254 T11
V40 CC	2.0 T5	12.13-	132	B 5204 T8
	2.0 T5 AWD	07.13-	132	B 5204 T8
	2.0 T5	03.13-	157	B 5204 T9
	2.0 T5 AWD	03.13-	157	B 5204 T9
	2.5 T5	12.12-	187	B 5254 T12
	2.5 T5 AWD	01.13-	187	B 5254 T12
	2.5 T5	01.14-	183	B 5254 T14
V50 (MW)	2.4	04.04-	103	B 5244 S5
	2.4	04.04-	125	B 5244 S4
	2.5 T5	04.04-	162	B 5254 T3

CL410 ▶

< CL410

VOLVO				
V50 (MW)	2.5 T5	03.07-	169	B 5254 T7
	2.5 T5 AWD	04.04-	162	B 5254 T3
	2.5 T5 AWD	03.07-	169	B 5254 T7
V60	2.0 T5	04.14-	157	B 5204 T9
V70 II (SW)	2.0 T	07.01-08.07	132	B 5204 T5
	2.4 T5	04.04-08.07	191	B 5244 T5
	R 2,5 T AWD	03.03-08.07	221	B 5254 T4
V70 III (BW)	2.5 T	08.07-	147	B 5254 T6
	2.5 T	01.10-	170	B 5254 T10
	2.5 T FlexiFuel	05.08-	147	B 5254 T8
	2.5 T FlexiFuel	10.09-	170	B 5254 T11
XC60	2.5 T5 AWD	04.14-	187	B 5254 T12

CL411

PIN

OEM-No.
FORD 4751265
5008190
5F2E12029AA
5F2E12029AB

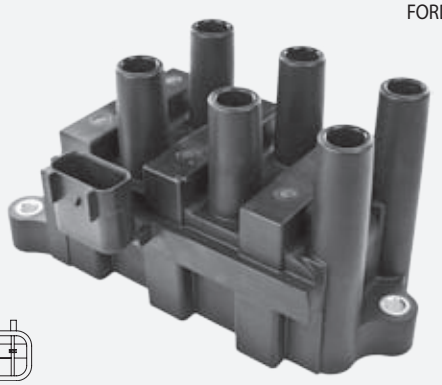

FORD				
Mondeo II	2.5 24V	06.00-09.00	125	SEB/SEC
Mondeo II Combi	2.5 24V	10.99-09.00	125	SEB/SEC
Mondeo II Sedan	2.5 24V	06.00-09.00	125	SEB/LCBD/SEC
Mondeo III	2.5 V6 24V	10.00-03.07	125	LCBD
	3.0 V6 24V	09.04-03.07	150	REBA
	3.0 ST220	04.02-03.07	166	MEBA
Mondeo III Combi	2.5 V6 24V	10.00-03.07	125	LCBD
	3.0 V6 24V	09.04-03.07	150	REBA
	3.0 ST220	04.02-03.07	166	MEBA
Mondeo III Sedan	2.5 V6 24V	10.00-03.07	125	LCBD
	3.0 V6 24V	09.04-03.07	150	REBA
	3.0 ST220	04.02-03.07	166	MEBA

CL412

OEM-No.
FORD 1404981
1716750
6E5G12A366AD
6E5G12A366AE

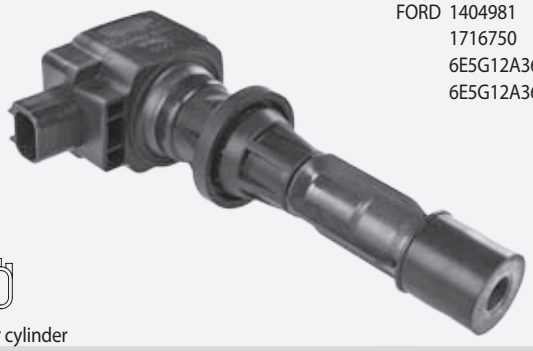

1 coil per cylinder

FORD				
Galaxy (WA6)	2.3	07.07-	118	SEWA
Mondeo IV	2.3	07.07-09.14	118	SEBA
Mondeo IV Sedan	2.3	07.07-09.14	118	SEBA
Mondeo IV Turnier	2.3	07.07-09.14	118	SEBA
S-Max (WA6)	2.3	07.07-	118	SEWA

CL413

OEM-No.
FORD AG9G-12A366-BB
1682188

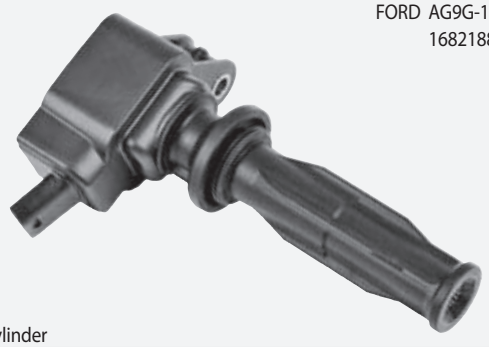

1 coil per cylinder

FORD				
Galaxy (WA6)	2.0 EcoBoost	07.10-04.11	146	TNWB
	2.0 EcoBoost	03.10-04.11	149	TNWA
Galaxy	2.0 EcoBoost	01.15-	176	R9CD/R9CI
Mondeo IV	2.0 EcoBoost	07.10-04.11	176	TPBA
	2.0 SCTi	03.10-04.11	149	TNBA
Mondeo IV Turnier	2.0 EcoBoost	07.10-04.11	176	TPBA
	2.0 SCTi	03.10-04.11	149	TNBA
S-Max (WA6)	2.0 EcoBoost	07.10-04.11	146	TNWB
	2.0 EcoBoost	03.10-04.11	149	TNWA
	2.0 EcoBoost	07.10-04.11	176	TPWA
S-Max	2.0 EcoBoost	02.15-	176	R9CD/R9CI
VOLVO				
S60 II	2.0 T	04.10-	149	B 4204 T6
	2.0 T5	04.10-	177	B 4204 T7
V60	2.0 T	09.10-	149	B 4204 T6
	2.0 T5	09.10-	177	B 4204 T7
V70 III (BW)	2.0 T	01.10-	149	B 4204 T6
	2.0 T5	01.10-	177	B 4204 T7
XC60	2.0 T	03.10-	149	B 4204 T6
	2.0 T5	09.10-	177	B 4204 T7

CL414

OEM-No.
FORD 1762724
1832313
BM5G-12A366-CA
BM5G-12A366-DA
BM5G-12A366-DB

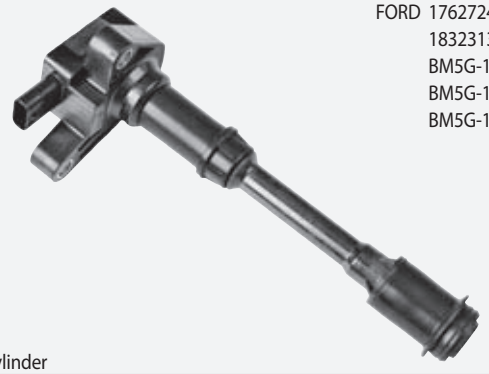

1 coil per cylinder

FORD				
Focus III	1.6 EcoBoost	04.11-	110	JQDA/_B/YUDA
	1.6 EcoBoost	04.11-	134	JTDB/JTDA
Focus III Sedan	1.6 EcoBoost	04.11-	110	JQDA/_B/YUDA
	1.6 EcoBoost	04.11-	134	JTDB/JTDA
Focus III Turnier	1.6 EcoBoost	05.11-	110	JQDA/_B/YUDA
	1.6 EcoBoost	05.11-	134	JTDB/JTDA
Galaxy (WA6)	1.6 EcoBoost	11.10-06.15	118	JTWA/JTWB
Grand C-Max	1.6 EcoBoost	12.10-	110	JQDA/JQDB
	1.6 EcoBoost	12.10-	134	JTDB/JTDA
Kuga II (DM2)	1.6 EcoBoost	03.13-	110	JQMA/JQMB
	1.6 EcoBoost 4x4	03.13-	110	JQMA/JQMB
	1.6 EcoBoost 4x4	03.13-	134	JTMA
Mondeo IV	1.6 EcoBoost	02.11-09.14	118	JTBB
Mondeo IV Turnier	1.6 EcoBoost	02.11-09.14	118	JTBA
S-Max (WA6)	1.6 EcoBoost	02.11-	118	JTWA/JTWB
Grand Tourneo	1.6 EcoBoost	11.13-	110	JQGA

CL415

OEM-No.
FORD CM5E-12A366-BB
CM5E-12A366-BC
CM5E-12A366-CA
JAGUAR JDE30294
LANDROVER LR030637

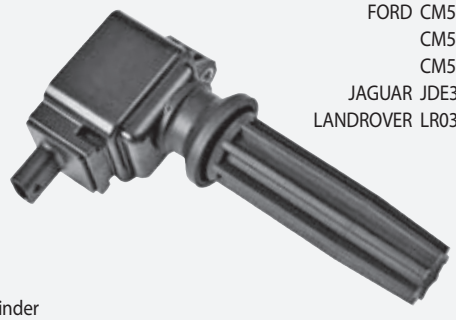

1 coil per cylinder

FORD				
Focus III	2.0 ST	07.12-	184	R9DA
Focus III Turnier	2.0 ST	07.12-	184	R9DA
Galaxy (WA6)	2.0 EcoBoost	05.11-	146	TNWB
Mondeo IV	2.0 EcoBoost	05.11-09.14	176	TPBA
Mondeo IV Turnier	2.0 EcoBoost	05.11-09.14	176	TPBA
S-Max (WA6)	2.0 EcoBoost	05.11-	146	TNWB
	2.0 EcoBoost	05.11-	176	TPWA
JAGUAR				
XF	2.0	06.12-04.15	177	204PT
XJ	2.0	05.12-	177	204PT
LANDROVER				
Freelander 2 (FA_)	2.0 Si4 4x4	10.11-10.14	177	204PT
Range Rover Evoque	2.0 4x4	06.11-	177	204PT

CL416

OEM-No.
FORD CM5G-12A366-CB
1827901

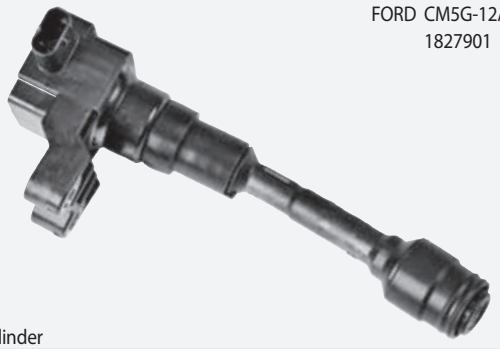

1 coil per cylinder

FORD				
B-Max (JK)	1.0 EcoBoost	10.12-	74	SFJA/_B/_D/_C
	1.0 EcoBoost	10.12-	88	M1JA
	1.0 EcoBoost	10.12-	92	M1JE
C-Max II (DXA/C_ _)	1.0 EcoBoost	10.12-	74	M2DA/SFDA
	1.0 EcoBoost	10.12-	92	M1DA
Ecosport	1.0 EcoBoost	10.13-	92	M1JC
Fiesta VI	1.0	01.13-	48	XMJA/XMJB
	1.0	10.12-	59	P4JC/_D/_A/_JB
	1.0 EcoBoost	01.13-	74	SFJA/_B/_D/_C
	1.0 EcoBoost	09.12-	92	M1JE
	1.0 Sport	05.14-	103	YYJA/YYJB
Focus III	1.0 EcoBoost	02.12-	92	M1DA
	1.0 EcoBoost	02.12-	74	M2DA
Focus III Sedan	1.0 EcoBoost	02.12-	74	M2DA
	1.0 EcoBoost	02.12-	92	M1DA
Focus III Turnier	1.0 EcoBoost	02.12-	74	M2DA
	1.0 EcoBoost	02.12-	92	M1DA
Mondeo V CC	1.0 EcoBoost	02.15-	92	M1CB/M1CA
Mondeo V Turnier	1.0 EcoBoost	02.15-	92	M1CB/M1CA
Grand Tourneo	1.0 EcoBoost	11.13-	74	M2GA/M2GB
Tourneo Courier	1.0 EcoBoost	02.14-	74	SFCD/_C/_A/_B
Transit Connect Van	1.0 EcoBoost	02.13-	74	M2GA
Transit Courier Combi	1.0 EcoBoost	02.14-	74	SFCD/_C/_A/_B
Transit Courier Van	1.0 EcoBoost	02.14-	74	SFCD/_C/_A/_B

CL500

DIN

OEM-No.
HONDA 30500-PM5-A02
30500-PM5-A03
ROVER GCL 161

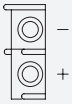

ACURA				
Integra CC	1.6	01.85-12.90	74	D16A1
	1.6 i	01.85-12.90	88	D16A8
Integra Coupe	1.6	01.85-12.90	74	D16A3
	1.6 i	01.85-12.90	88	D16A8
Integra Sedan	1.6	01.85-12.90	74	D16A3
	1.6 i	01.85-12.90	88	D16A8
HONDA				
Civic II Shuttle (EE)	1.5 i 16V	01.88-11.91	69	D15B2
	1.6 i 16V 4WD	01.88-12.89	80	D16A6
	1.6 i 16V 4WD	01.88-02.95	81	D16A6
Civic III Hatchback	1.5 GL	10.83-10.87	63	EW2
Civic III Sedan	1.5 GL	10.83-10.87	63	EW2
Civic IV Hatchback	1.6 i 16V	10.87-09.91	80	D16A6
	1.6 i 16V	10.87-09.91	81	D16Z2
	1.6 i 16V Vtec	10.89-09.91	110	B16A1
Civic IV Sedan (ED)	1.5 i 16V	10.87-09.91	66	D15B2
	1.5 i 16V	10.87-09.91	69	D15B2
	1.6 i 16V	11.87-09.91	80	D16A6
	1.6 i 16V	10.87-09.91	81	D16Z2
	1.6 i 16V	09.87-09.91	96	D16A7
	1.6 i 16V 4x4	10.89-09.91	80	D16A6
Concerto (HW)	1.5 i 16V	08.89-03.95	66	D15B2
	1.6 16V	08.89-03.95	78	D16Z2
	1.6 i 16V	08.89-03.95	82	D16Z2
	1.6 i 16V	08.89-03.95	90	D16A8
Concerto Sedan	1.5 i 16V	08.89-05.95	66	D15B2
	1.6 16V	08.89-03.95	78	D16Z2
	1.6 i 16V	08.89-03.95	82	D16Z2
	1.6 i 16V	08.89-03.95	90	D16A8
CRX II (ED, EE)	1.6 i 16V	10.87-02.92	91	D16Z5
	1.6 i 16V	10.87-12.89	96	D16A8/D16A9
	1.6 i 16V Vtec	10.89-02.92	110	B16A1
ROVER				
200 Coupe (XW)	216	10.92-06.99	90	D 16 A8
200 Hatchback (XW)	216 GSi	10.89-10.95	82	D 16 Z2
	216 GTi	09.90-10.95	90	D 16 A8
400 (XW)	416 GSI	04.90-04.95	82	D 16 Z2
	416 GTI	04.90-04.95	90	D 16 A8
Cabriolet (XW)	216 1.6i	01.92-11.99	90	D 16 A8

CL501

OEM-No.

HONDA 30510-P73-A01
30510-P73-A02
30510-PT2-006
30500PTZ005
ROVER GCL 195
NEC 100530

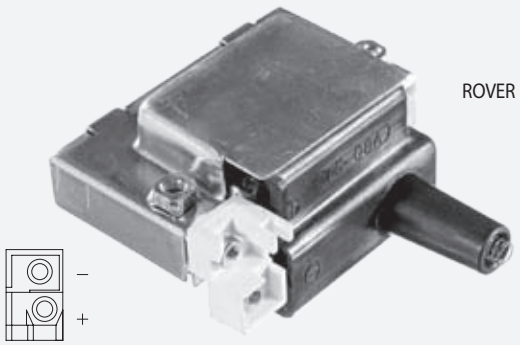

HONDA				
Accord IV (CB)	2.0 16V	01.90-03.93	81	F20A3/F20A2
	2.0 i 16V	01.90-03.93	98	F20A4/F20A8
	2.2 i 16V	01.90-03.93	110	F22A3
	2.2 i 16V Automatic	01.90-03.93	108	F22A3
Accord IV Aerodeck	2.0 i 16V	03.93-12.93	98	F20Z3
	2.2 i 16V	01.91-12.93	108	F22A8
	2.2 i 16V	01.91-12.93	110	F22A7
Accord IV Coupe	2.0 i 16V	01.92-09.93	98	F20A7
Accord V (CC, CD)	2.0 i	03.93-01.96	85	F20Z2
	2.0 i S	03.93-01.96	96	F20Z1
	2.3 i SR	03.93-01.96	116	H23A3
Accord V (CE, CF)	2.0 i LS	02.96-10.98	96	F20Z1
Accord V Aerodeck	2.0 i LS 16V	09.93-02.98	100	F20B3
	2.2 i ES	09.93-02.98	110	F22B5
Accord V Coupe (CD)	2.0	09.93-12.97	100	F20B3
	2.2 i ES	09.93-02.98	110	F22B5
Accord VI (CG, CK)	2.2 Type-R	02.99-12.02	156	H22A7
Civic V Coupe (EJ)	1.5 i LSi	08.93-11.95	74	D15B7
	1.6 i	01.94-11.95	77	D16Y7
	1.6 i Vtec	01.94-03.96	92	D16Y6/D16Z9
	1.6 i Vtec	01.94-11.95	118	B16A2
Civic V Hatchback	1.5 i 16V	10.91-11.95	66	D15B2/D15Z2
	1.5 i 16V	10.91-11.95	69	D15Z1 /D15B2
	1.6 16V Vtec	10.91-11.95	92	D16Z6
	1.6 VTi 16V	10.91-11.95	118	B16A2
Civic V Sedan	1.5 i 16V	10.91-11.95	69	D15B2
	1.6 16V Vtec	10.91-11.95	92	D16Z6/D16Z7
Civic VI Aerodeck	1.4 16V	04.98-02.01	55	D14A7
	1.4 16V	04.98-02.01	66	D14A8
	1.6 16V	04.98-02.01	85	D16B2
	1.8 16V	04.98-02.01	124	B18C4
Civic VI Coupe	1.6 i	03.96-03.00	77	D16Y7
	1.6 i Vtec	03.96-03.00	92	D16Y8
	1.6 i Vtec	04.99-12.00	118	B16A2
Civic VI Fastback	1.5 16V	01.97-02.01	84	D15Z8
	1.5 i Vtec-E	09.94-01.97	66	D15Z3
	1.6 16V	01.97-02.01	85	D16B2
	1.6 i	09.94-01.97	83	D16Y3
	1.6 i Vtec	09.94-01.97	93	D16Y2
	1.6 VTi	01.97-02.01	118	B16A2
	1.8 16	01.97-02.01	124	B18C4
Civic VI Hatchback	1.4 i	11.95-02.01	55	D14A3
	1.4 i S	11.95-02.01	66	D14A4/_Z4/_Z2
	1.5 i	11.95-02.01	84	D15Z6
	1.6 i	11.95-02.01	84	D16Y5
	1.6 VTi	11.95-02.01	118	B16A2
Civic VI Sedan	1.4	11.95-10.98	55	D14A4
	1.4 i	11.95-02.01	66	D14A4/_Z4/_Z2
	1.5 i	11.95-02.01	84	D15Z6
	1.6 i Vtec	11.95-02.01	92	D16Y6/D16Y8
	1.6 VTi	11.95-02.01	118	B16A2
CR-V I (RD)	2.0 16V	01.99-02.02	108	B20Z1
	2.0 16V 4WD	10.95-01.99	94	B20B
CRX III (EH, EG)	1.6 ESi	03.92-12.98	92	D16Y8/D16Z6
	1.6 i VTi	03.92-12.98	118	B16A2

< CL501

HONDA				
HR-V (GH)	1.6 16V	03.99-	77	D16W1
	1.6 16V 4WD	03.99-	77	D16W1
	1.6 16V 4WD	10.99-	91	D16W5
Integra Coupe	1.8 Type-R	11.97-10.01	140	B18C6
Logo (GA3)	1.3	03.99-03.02	48	D13B7
Prelude IV	2.0 i 16V	02.92-09.96	98	F20A4
	2.2 i 16V Vtec	02.93-09.96	136	H22A2
	2.3 i 16V	02.92-09.96	118	H23A2
Prelude V	2.0 16V	10.96-10.00	98	F20A4
	2.2 16V	10.96-10.00	136	H22A2 /H22A5
	2.2 16V	10.96-10.00	147	H22A5
Shuttle (RA)	2.2 16V	10.94-02.98	110	F22B8
ROVER				
600 (RH)	620 i	08.93-06.96	85	F 20 Z2
	620 Si	08.93-02.99	96	F 20 Z1
	620 Ti Vitesse	07.94-02.99	147	20 T4G
	623 Si	08.93-02.99	116	H 23 A3

CL502

DIN

OEM-No.

HYUNDAI 27301-22040
27301-22050

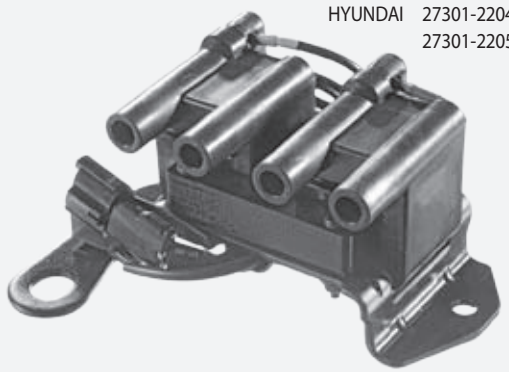

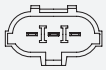

HYUNDAI				
Accent I (X-3)	1.3	10.94-01.00	44	G4EH
	1.3	10.94-01.00	55	G4EH
	1.3 i 12V	10.94-01.00	62	G4EH
	1.5 i 12V	10.94-01.00	65	G4EK
Accent Sedan (X-3)	1.3	10.94-01.00	44	G4EH
	1.3	10.94-01.00	55	G4EH
	1.3 i 12V	10.94-01.00	62	G4EH
	1.5 i 12V	10.94-01.00	65	G4EK
Accent II (LC)	1.5	01.00-11.05	66	G4EB
	1.5	09.00-11.05	75	G4EC-G
Accent II Sedan (LC)	1.5	01.00-11.05	66	G4EB
Lantra II (J-2)	1.5 12V	12.96-09.00	65	G4EK
Lantra II Wagon (J-2)	1.5 12V	04.97-10.00	65	G4EK
MITSUBISHI				
Colt V (CJ_, CP_)	1300 GL,GLX	05.96-09.00	55	4G13 (12V)
Lancer VI (CJ-CP_)	1.3 12V	12.95-08.03	55	4G13 (12V)
	1.5 16V	12.95-08.03	69	4G15 (16V)

CL503

DIN

OEM-No.

HYUNDAI 27301-23003

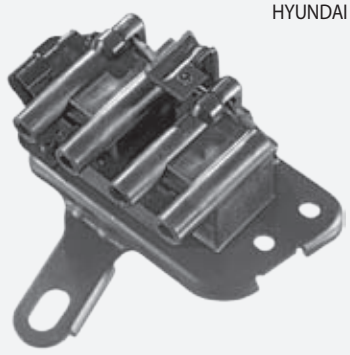

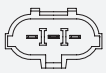

HYUNDAI				
Coupe (RD)	1.6 16V	03.98-06.00	85	G4GR

< CL503

HYUNDAI

Coupe (RD)	1.6 i 16V	12.96-06.00	84	4G61
	2.0 16V	03.01-04.02	99	G4DF
	2.0 16V	08.96-04.02	102	G4GF
Elantra (XD)	1.6	06.00-07.06	66	G4GR
Elantra Sedan (XD)	1.6	06.00-07.06	66	G4GR
Getz (TB)	1.4 i	08.05-	71	G4EE
Lantra II (J-2)	1.6 16V	11.95-09.00	84	4G61
	1.6 i	11.95-09.00	66	G4GR
	1.8 16V	11.95-09.00	94	G4GM
	2.0 16V	08.96-09.00	102	G4GF
Lantra II Wagon (J-2)	1.6 16V	02.96-10.00	84	4G61
	1.6 i	02.96-10.00	66	G4GR
	1.8 16V	02.96-10.00	94	G4GM
	2.0 16V	12.96-10.00	102	G4GF

CL504

DIN

OEM-No.
KIA 0K201 18 10XB
0K201 18 10XC

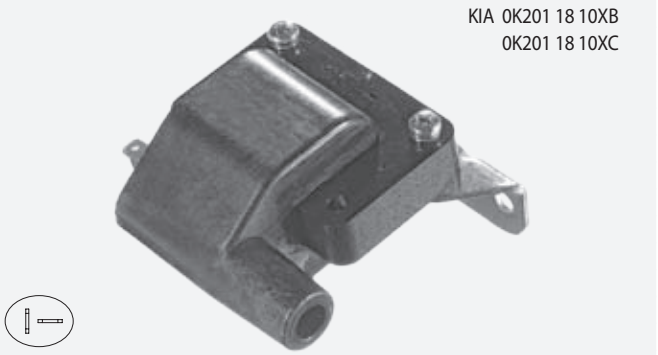

KIA

Sephia (FA)	1.5 i	02.96-10.97	59	B5
	1.6 i	01.95-10.97	59	B6
Sephia Sedan (FA)	1.5 i	02.96-10.97	59	B5
	1.6 i	09.93-10.97	59	B6

CL505

PIN

OEM-No.
KIA 0K247 18 100A

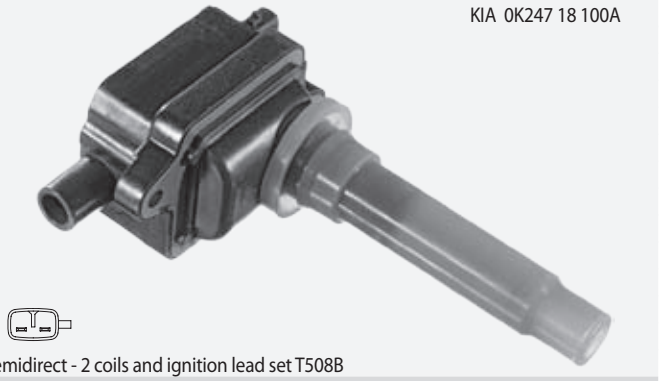

semidirect - 2 coils and ignition lead set T508B

KIA

Carens I (FC)	1.8 i	11.00-07.02	81	T8
Carens II (FJ)	1.8	07.02-	93	TB
CLarus (K9A)	1.8 i 16V	07.96-	85	T8
CLarus Combi (GC)	1.8 i 16V	05.98-	85	T8
Sephia (FA)	1.6 i	01.95-10.97	59	B6
	1.8 i 16V	01.95-10.97	82	OK24N/OK26Y
Sephia Sedan (FA)	1.8 i 16V	01.95-10.97	82	OK24N/OK26Y
Shuma (FB)	1.8 i 16V	10.97-03.01	81	T8
Shuma Sedan (FB)	1.8 GX	05.99-10.01	85	
Shuma II (FB)	1.8	04.03-08.04	84	T8

CL506

DIN

OEM-No.
MAZDA B6S71810XA
B6S81810XA

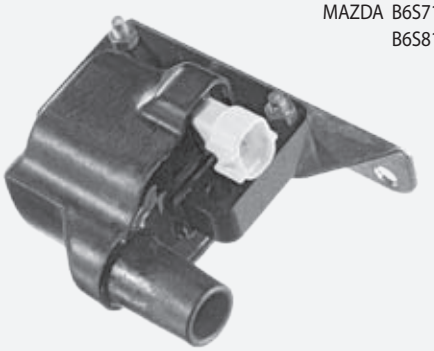

MAZDA

323 C IV (BG)	1.3 16V	04.91-07.94	54	B3 (16V)
	1.8 16V	09.89-03.93	103	BP22/BP31
	1.8 16V 4WD	11.91-12.93	76	BP
	1.8 16V GT	09.89-03.93	94	BP (DOHC)
	1.8 16V Turbo 4WD	09.90-12.92	120	BP Turbo
	1.8 16V Turbo 4WD	01.93-07.94	136	BP Turbo
323 F IV (BG)	1.6	09.89-06.91	62	B6E
	1.6 16V	03.91-10.94	65	B6
	1.8 4WD	01.91-04.94	76	BPC
	1.8 16V	08.89-07.94	76	BP
	1.8 16V	09.89-03.93	103	BP31
	1.8 16V GT	08.89-07.94	94	BP (DOHC)
323 S IV (BG)	1.3 16V	04.91-07.94	54	B3 (16V)
	1.6	09.89-06.91	62	B6E
	1.6 16V	08.89-10.94	65	B6
	1.8 16V	08.89-07.94	76	BP52
	1.8 16V 4WD	09.91-07.94	76	BP52
	1.8 16V GT	06.89-07.94	94	BP (DOHC)
	1.8 16V Turbo 4WD	01.91-07.94	120	BP Turbo
MX-3 (EC)	1.6 i	07.91-	65	B69

CL507

DIN

OEM-No.
MAZDA B121 18 10X
B541 18 10XA
B542 18 10XA

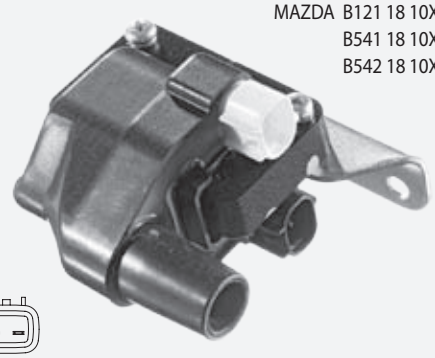

MAZDA

121 I (DA)	1.1	10.87-10.90	42	B1/B116
	1.3	04.89-10.90	40	B3
	1.3	10.87-11.90	44	B3
121 II (DB)	1.1	11.90-10.93	40	B1
	1.3 16V	11.90-10.93	39	B3 (16V)
	1.3 i 16V	11.90-10.93	53	B3 (16V)
323 III (BF)	1.4	04.87-07.89	44	B3
323 III Hatchback	1.4	09.87-10.89	44	B3
323 III Station Wagon	1.6	09.86-10.95	63	B6/B65M /B6E
	1.6 4x4	05.90-03.93	63	B65M /B6E
323 C IV (BG)	1.3	09.89-07.94	49	B3E
	1.3 16V	09.89-07.94	54	B3 (16V)
	1.6	09.89-06.91	62	B6E
	1.6 16V	03.91-10.94	65	B6
323 C V (BA)	1.3 16V	08.94-09.98	54	B3 (16V)
323 F IV (BG)	1.6	09.89-06.91	62	B6E
	1.6 16V	03.91-10.94	65	B6
323 S IV (BG)	1.3	09.89-06.91	49	B3E/B383

CL507 ▶

< CL507

MAZDA				
323 S IV (BG)	1.3 16V	04.91-07.94	54	B3 (16V)
	1.6	09.89-06.91	62	B6E
	1.6 16V	08.89-10.94	65	B6
323 S V (BA)	1.3 16V	08.94-09.98	54	B3 (16V)

CL508

DIN

OEM-No.

HYUNDAI 27301-24510
27301-24520
MITSUBISHI 27301-24520
MD114994

HYUNDAI				
Lantra I (J-1)	1.5 i.e.	10.90-11.95	63	G15B/G4DJ
Pony (X-2)	1.3	10.89-01.95	43	G4DG
	1.3	10.89-01.95	49	G4DG
	1.5	10.89-01.95	53	G15B/G4DJ
	1.5 i	10.89-01.95	61	G15B/G4DJ
	1.5 i	10.89-01.95	62	G15B/G4DJ
Pony / Excel Sedan	1.3	01.90-01.95	49	G4DG
	1.5	01.90-01.95	53	G15B/G4DJ
	1.5 i	01.90-01.95	61	G15B/G4DJ
	1.5 i	01.90-01.95	62	G15B/G4DJ
S Coupe (SLC)	1.5 i	02.90-05.96	62	G15B/G4DJ
	1.5 i	04.92-05.96	65	G4EK
	1.5 i Turbo	04.91-05.96	85	G4EK-TC
MITSUBISHI				
Colt III (C5_A)	1.5 cat	07.90-05.92	66	4G15 (12V)
	1.5 GLXi	04.88-05.92	62	4G15
Eclipse I (D2_A)	1.8	12.89-03.94	68	4G37
Galant III (E1_A)	2.0 Turbo ECi	06.84-04.90	110	4G63T (SOHC 8V)
Galant IV (E3_A)	2.0	04.89-10.92	80	4G63 (SOHC 8V)
	2.0 4WD	04.89-10.92	80	4G63 (SOHC 8V)
Galant IV Sedan	2.0	11.87-10.92	80	4G63 (SOHC 8V)
	2.0 4WD	12.88-10.92	80	4G63 (SOHC 8V)
	2.0 GTI 16V	11.87-10.92	106	4G63 (DOHC 16V)
	2.0 GTi 16V 4WD	06.88-10.92	106	4G63 (DOHC 16V)
L 300 Bus	2.4	11.90-	82	4G64 (8V)
	2.4 4WD	11.90-	82	4G64 (8V)
Lancer III Stat. Wagon	1.5	09.85-12.87	55	4G15
	1.5	09.88-12.90	61	4G15
	1.5 12V	09.90-12.91	66	4G15 (12V)
	1.8 4WD	08.90-06.92	69	4G37
Lancer IV	1.5	06.88-05.92	62	4G15
	1.5 12V	05.89-05.92	66	4G15 (12V)
	1.8 4WD	09.89-06.92	71	4G37
Lancer IV Sedan	1.5	04.88-05.92	62	4G15 (12V)/4G15
	1.5 12V	05.89-05.92	66	4G15 (12V)
Pajero II	2.4	04.91-10.99	82	4G64 (12V)
Pajero II Canvas Top	2.4	04.91-04.00	82	4G64 (12V)

CL509

DIN

OEM-No.

NISSAN 22433-51J10
22433-53J20
22433-55S10
22433-56E11
22433-56E12

INFINITI				
G20	2.0	01.90-12.97	85	SR20DE
NISSAN				
100 NX (B13)	1.6	03.90-06.92	66	GA16DS
	1.6 SR	09.93-10.94	75	GA16DE
	2.0	10.90-10.94	110	SR20DE
	2.0 GTI	03.91-10.94	105	SR20DE
200 SX (S14)	2.0 i 16V Turbo	10.93-12.99	147	SR20DET
Maxima II (J30)	3.0 i	10.88-06.94	125	VG30E
Micra I (K10)	1.2	07.86-07.92	40	MA12S
Pick-Up (D21)	2.4 i 12V	10.95-02.98	91	KA24E
	2.4 i 12V 4WD	10.95-02.98	93	KA24E
Prairie Pro (M11)	2.0 i	10.88-04.92	72	CA20E
	2.0 i 4x4	10.88-12.92	72	CA20E
	2.4 i	04.92-07.94	98	KA24E
	2.4 i 4x4	04.92-07.94	98	KA24E
Primera (P10)	1.6	06.90-01.96	66	GA16DS
	2.0	06.90-04.93	105	SR20DE
	2.0 16V	06.90-01.96	85	SR20DI
	2.0 16V 4x4	04.91-06.96	85	SR20DI
	2.0 GT	06.90-01.96	110	SR20DE
	2.0 GT 4x4	03.91-04.93	105	SR20DE
	2.0 i	01.95-06.96	92	SR20DE
Primera Hatch. (P10)	1.6	06.90-01.96	66	GA16DS
	1.6	06.90-06.93	71	GA16DS
	2.0	06.90-04.93	105	SR20DE
	2.0	06.90-01.96	110	SR20DE
	2.0 16V	06.90-01.96	85	SR20DI
	2.0 16V 4x4	04.91-06.96	85	SR20DI
	2.0 GT 4x4	03.91-04.93	105	SR20DE
	2.0 i	01.95-06.96	92	SR20DE
Primera Traveller (W10)	1.6 i	07.90-03.98	66	GA16DS
	2.0	07.94-01.98	110	SR20DE
	2.0 i	07.90-03.98	85	SR20DI
Serena (C23M)	1.6 16V	02.93-09.01	71	GA16DE
	2.0 16V	11.92-09.01	93	SR20DE
Sunny III (N14)	1.4 i	10.90-05.95	55	GA14DS
	1.6 i	10.90-05.95	66	GA16DS
	1.6 i 16V 4WD	10.90-05.95	66	GA16DS
Sunny III Hatchback	1.4	10.90-06.95	60	GA14DS
	1.4 i	10.90-05.95	55	GA14DS
	1.6 i	10.90-05.95	66	GA16DS
	2.0 GTI 16V	10.90-05.95	105	SR20DE
	2.0 GTI-R 4x4	10.90-05.95	162	SR20DET
Sunny III Liftback (N14)	1.4 i	10.90-05.95	55	GA14DS
	1.6 i	10.90-05.95	66	GA16DS
	2.0 i 16V	10.90-05.95	105	SR20DE
Sunny III Traveller	1.6 16V 4x4	11.90-05.95	66	GA16DS
	1.6 i	06.91-03.00	66	GA16DS
Terrano I (WD21)	3.0 i 4WD	01.90-12.95	109	VG30E
Terrano II (R20)	2.4 i 12V 4WD	02.93-06.96	91	KA24E

CL510

OEM-No.
NISSAN 22448-4M500
22448-4M50A

1 coil per cylinder

NISSAN				
Almera II (N16)	1.5	07.00-	66	QG15DE
	1.5	10.02-	72	QG15DE
	1.8	07.00-	84	QG18DE
	1.8	10.02-	85	QG18DE
Almera Tino (V10)	1.8	08.00-	84	QG18DE
	1.8	12.02-	85	QG18DE

CL511

OEM-No.
NISSAN 22448-6N000
22448-6N002
22448-6N010
22448-6N012
22448-6N015

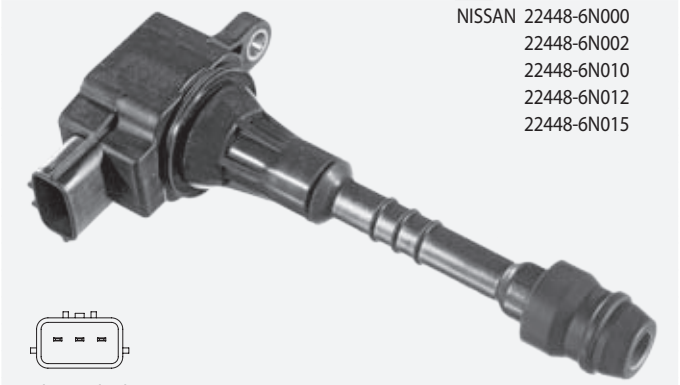

1 coil per cylinder

NISSAN				
Almera II (N16)	1.5	07.00-	66	QG15DE
	1.5	10.02-	72	QG15DE
	1.8	07.00-	84	QG18DE
	1.8	10.02-	85	QG18DE
Almera II Hatchback	1.5	03.00-	66	QG15DE
	1.5	10.02-	72	QG15DE
	1.8	01.00-	84	QG18DE
	1.8	10.02-	85	QG18DE
Almera Tino (V10)	1.8	08.00-	84	QG18DE
	1.8	12.02-	85	QG18DE
Primera (P11)	1.6 16V	09.00-12.01	78	QG16DE
	1.8 16V	08.99-12.01	84	QG18DE
Primera (P12)	1.6	03.02-	78	QG16DE
	1.6	01.02-	80	QG16DE
Primera Combi (WP12)	1.6 Visia	01.02-	80	QG16DE
Primera Hatch. (P11)	1.6 16V	09.00-07.02	78	QG16DE
	1.8 16V	08.99-07.02	84	QG18DE
Primera Hatch. (P12)	1.6	07.02-	78	QG16DE
	1.6	07.02-	80	QG16DE
	1.8	07.02-	85	QG18DE
Primera Travel. (WP11)	1.8 16V	08.99-12.01	84	QG18DE

CL512

OEM-No.
SUZUKI 33410-77E11

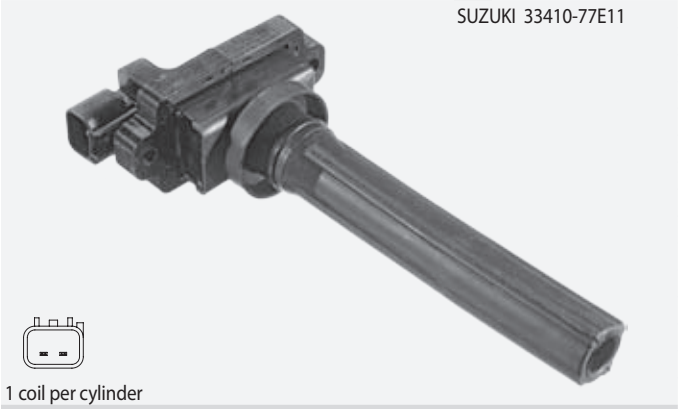

1 coil per cylinder

SUZUKI				
Baleno (EG)	1.8 GTX	03.96-05.02	89	J18A
Baleno CC (EG)	1.8 GTX	03.96-05.02	89	J18A
Baleno Combi (EG)	1.8 i 16V	08.96-05.02	89	J18A
Grand Vitara II (JT)	2.0 Allrad	10.05-	103	J20A
Vitara (ET, TA)	2.0 V6 24V Allrad	12.94-03.98	100	H 20 A

CL513

OEM-No.
GM 94404545
TOYOTA 90919-02164

TOYOTA				
Avensis (_T22_)	1.6	09.97-10.00	74	4A-FE
	1.6	09.97-10.00	81	4A-FE
Avensis Liftback	1.6	09.97-10.00	74	4A-FE
	1.6	09.97-10.00	81	4A-FE
Avensis Stat. Wagon	1.6	09.97-10.00	74	4A-FE
	1.6	09.97-10.00	81	4A-FE
Carina II (_T17_)	1.6	12.87-11.89	66	4A-F
Carina II Sedan	1.6	12.87-08.90	66	4A-F
	1.6	12.87-03.92	72	4A-FE
	1.6	12.87-03.92	75	4A-FE
Carina II Stat. Wagon	1.6	12.87-12.89	66	4A-F
Carina E (_T19_)	1.6	12.93-09.97	73	4A-FE
	1.6	12.93-09.97	85	4A-FE
	1.6 16V	10.95-09.97	78	4A-FE
	1.6 GLI	04.92-09.97	79	4A-FE
Carina E Sedan	1.6	01.95-09.97	73	4A-FE
	1.6	10.95-09.97	78	4A-FE
	1.6	01.93-09.97	79	4A-FE
	1.6 16V	12.94-09.97	85	4A-FE
Carina E Sportswagon	1.6 GLI	01.93-09.97	79	4A-FE
	1.6 i	02.95-09.97	73	4A-FE
Celica (AT16, ST16)	1.6	04.86-08.89	63	4A-L
Celica (ST20, AT20)	1.8 i 16V	11.93-11.99	85	7A-FE
Celica Liftback	1.6	04.86-08.89	63	4A-L
Corolla (E8)	1.3	10.84-08.87	55	2E-LC/2E-L
	1.6	08.85-08.87	53	4A-LC
	1.6	12.85-05.88	54	4A-LC
	1.6	06.83-08.87	62	4A-L
Corolla (E9)	1.3 i	08.87-12.92	55	2E-E/2E
	1.6	08.87-12.89	66	4A-F
Corolla (E10)	1.3 12V	07.92-04.97	53	2E
	1.3 XLI	09.95-04.97	55	4E-FE

CL513 ▶

< CL513

TOYOTA				
Corolla (E10)	1.3 XLI 16V	07.92-09.95	65	4E-FE
	1.6 Si	09.95-04.97	84	4A-FE
Corolla (E11)	1.4	04.97-02.00	63	4E-FE
	1.6 Aut.	04.97-02.00	79	4A-FE
Corolla Compact (E9)	1.3	08.87-12.89	55	2E
	1.6	08.87-04.92	66	4A-F
Corolla Compact (E10)	1.3 12V	07.92-05.95	53	2E
	1.3 XLI	09.95-04.97	55	4E-FE
	1.3 XLI 16V	07.92-09.95	65	4E-FE
	1.6 Si	07.92-04.97	84	4A-FE
	1.8 GT	11.92-05.95	86	7A-FE
	1.8 GTi 4WD	11.92-04.95	81	7A-FE
Corolla Compact (E11)	1.4	04.97-02.00	63	4E-FE
	1.6	04.97-02.00	81	4A-FE
	1.6 Aut.	04.97-02.00	79	4A-FE
Corolla FX Compact	1.3	08.85-08.87	55	2E-L
Corolla Liftback (E8)	1.3	01.85-08.87	55	2E-LC/2E-L
	1.6	08.85-08.87	54	4A-LC
	1.6	06.83-08.87	62	4A-L
	1.6	07.85-05.88	63	4A-L
Corolla Liftback (E9)	1.3 i	08.87-04.92	55	2E-E/2E
	1.6	08.87-04.92	66	4A-F
Corolla Liftback (E10)	1.3 12V	07.92-05.95	53	2E
	1.3 XLI	07.92-04.97	65	4E-FE
	1.6 GLI	07.92-04.97	84	4A-FE
	1.8 GT	11.92-05.95	86	7A-FE
Corolla Liftback (E11)	1.4	04.97-02.00	63	4E-FE
	1.6	04.97-02.00	81	4A-FE
	1.6 Aut.	04.97-02.00	79	4A-FE
Corolla St. Wagon (E9)	1.3	12.87-06.92	55	2E
	1.6	02.88-05.92	66	4A-F
	1.6	12.87-04.92	70	4A-F
Corolla Wagon (E10)	1.3 12V	07.92-05.95	53	2E
	1.3 XLI	09.95-04.97	55	4E-FE
	1.3 XLI 16V	07.92-09.95	65	4E-FE
	1.6 Si	07.92-04.97	84	4A-FE
	1.8 16V 4WD	09.95-04.97	81	7A-FE
Corolla Wagon (E11)	1.4	04.97-02.00	63	4E-FE
	1.6	04.97-02.00	81	4A-FE
	1.6 Aut.	04.97-02.00	79	4A-FE
Hiace III Van	2.0	02.90-08.95	74	1RZ
	2.4	08.89-08.95	88	2RZ-E
	2.4 4WD	08.89-08.95	88	2RZ-E
Hiace III Wagon	2.0	08.89-04.98	74	1RZ
	2.4	08.89-08.95	88	2RZ-E
	2.4 4WD	08.89-08.95	88	2RZ-E
Hiace IV Bus	2.4	08.95-04.98	85	2RZ-E
	2.4 4WD	08.95-04.98	85	2RZ-E
Hiace IV Van	2.4	08.95-02.05	85	2RZ-E
	2.4 4WD	08.95-04.98	85	2RZ-E
Starlet (_P7_)	1.3	10.84-12.89	55	2E-LC
Starlet (_P8_)	1.0	12.89-12.92	40	1E
	1.3 12V	12.89-12.92	55	2E-E/2E
	1.3 12V cat	12.89-03.96	55	2E-E
Starlet (EP91)	1.3	04.96-03.99	55	4E-FE

CL514

PIN

OEM-No.
TOYOTA 90080-19005
90080-19005 00

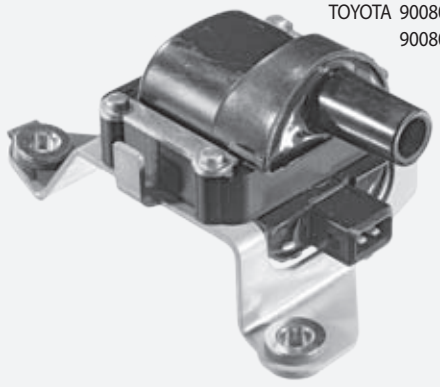

TOYOTA				
Avensis (_T22_)	1.6	09.97-10.00	74	4A-FE
	1.6	09.97-10.00	81	4A-FE
Avensis Liftback	1.6	09.97-10.00	74	4A-FE
	1.6	09.97-10.00	81	4A-FE
Avensis Station Wagon	1.6	09.97-10.00	74	4A-FE
	1.6	09.97-10.00	81	4A-FE
Carina E (_T19_)	1.6	12.93-09.97	73	4A-FE
	1.6	12.93-09.97	85	4A-FE
	1.6 16V	10.95-09.97	78	4A-FE
	1.6 GLI	04.92-09.97	79	4A-FE
Carina E Sedan	1.6	01.95-09.97	73	4A-FE
	1.6	10.95-09.97	78	4A-FE
	1.6	01.93-09.97	79	4A-FE
	1.6 16V	12.94-09.97	85	4A-FE
Carina E Sportswagon	1.6 i	02.95-09.97	73	4A-FE

CL515

DIN

OEM-No.
HYUNDAI 27301-38020

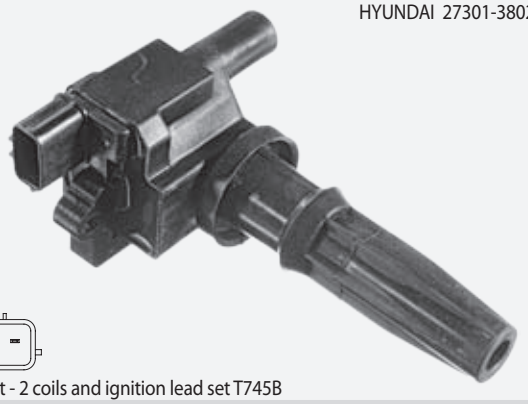

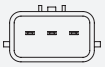

semidirect - 2 coils and ignition lead set T745B

HYUNDAI				
H-1 / Starex	2.4	08.01-04.04	82	G4CS
	2.4 4WD	08.01-04.04	82	G4CS
	2.4 4WD	06.01-04.04	99	G4JS
Santa Fé I (SM)	2.0	08.01-03.06	99	G4BP
	2.4 16V	02.01-03.06	100	G4JS-G
	2.4 16V	02.01-03.06	107	G4JS-G
	2.4 16V 4x4	02.01-03.06	100	G4JS-G
	2.4 16V 4x4	02.01-03.06	107	G4JS-G
Sonata IV (EF)	2.0 16V	10.01-11.04	96	G4JP-EG
	2.0 16V	06.98-10.01	100	G4JP-G
	2.4 16V	03.98-10.01	105	G4BS
Trajet (FO)	2.0	02.04-07.08	100	G4JP-G
	2.0	02.04-07.08	103	G4GC-G
Tucson (JM)	2.0	08.04-03.10	104	G4GC
	2.0 Allrad	08.04-03.10	104	G4GC
KIA				
Magentis (GD)	2.0	05.01-	100	G4JP
Sorento I (JC)	2.4	08.02-	102	G4JS

CL519

DIN

OEM-No.
HYUNDAI 27301-02502

HYUNDAI				
Atos (MX)	1.0 i	02.98-08.00	40	G4HC
Atos Prime (MX)	1.0 i	08.99-08.00	40	G4HC

CL520

OEM-No.
TOYOTA 90080-19021
90919-02240
90919-T2003

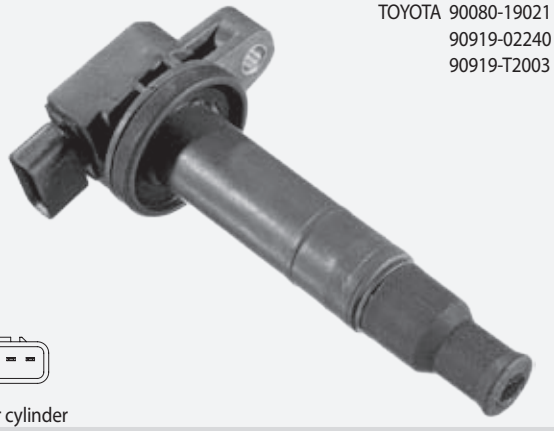

1 coil per cylinder

TOYOTA				
Corolla St. Wagon	1.5 Hybrid	10.14-	54	1NZ-FXE
IQ	1.0	01.09-	50	1KR-FE
Prius Liftback	1.5	08.03-03.09	57	1NZ-FXE
Prius Sedan	1.5 Hybrid	05.00-01.04	53	1NZ-FXE
Prius C (NHP10_)	1.5 Hybrid	02.12-	54	1NZ-FXE
Yaris (_ _P1_)	1.0 16V	03.03-09.05	48	1SZ-FE
	1.0 16V	04.99-09.05	50	1SZ-FE
	1.3	04.02-09.05	64	2SZ-FE
	1.3 16V	11.99-09.05	63	2NZ-FE
	1.5 TS	01.03-09.05	77	1NZ-FE
	1.5 VVT-i TS	04.01-09.05	78	1NZ-FE
	1.5 VVT-i TS	03.03-07.05	110	1NZ-FE
Yaris (_ _P9_)	1.3 VVT-i	08.05-	64	2NZ-FE/2SZ-FE
	1.33 VVT-i	07.10-	73	1NR-FE
	1.33 VVT-i	03.09-	74	1NR-FE
Yaris Verso	1.3	11.02-09.05	62	2NZ-FE
	1.3	08.99-10.02	63	2NZ-FE
	1.5	05.03-09.05	77	1NZ-FE
	1.5	03.00-09.05	78	1NZ-FE
	1.5 4WD	03.00-09.05	78	1NZ-FE

CL521

OEM-No.
NISSAN 22448-1F700

1 coil per cylinder

NISSAN				
Micra II (K11)	1.0 i 16V	07.00-09.00	40	CG10DE
	1.0 i 16V	09.00-02.03	44	CG10DE
	1.3 i 16V	08.92-09.00	55	CG13DE
	1.4 i 16V	09.00-02.03	60	CGA3DE

CL522

OEM-No.
HONDA 30520-PDF-E11

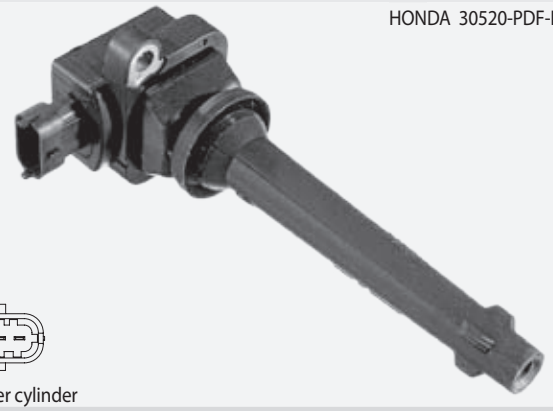

1 coil per cylinder

HONDA				
Accord VI (CG, CK)	1.6 i	10.98-12.02	85	D16B6

CL523

DIN

OEM-No.
HYUNDAI 27301-02600

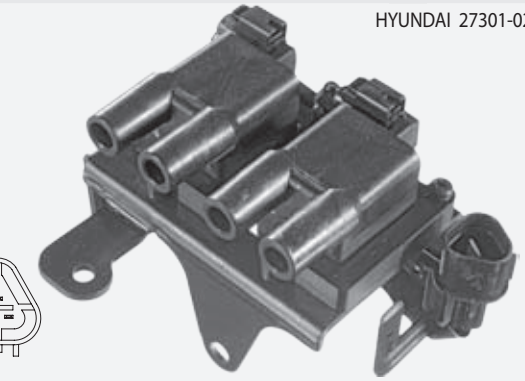

HYUNDAI				
Atos (MX)	1.0 i	08.00-03.02	40	G4HC
	1.0 i	03.01-	43	G4HC-E
Atos Prime (MX)	1.0 i	08.00-	40	G4HC
	1.0 i	03.01-	43	G4HC-E
	1.1	06.03-	43	G4HD

CL524

DIN

OEM-No.
HYUNDAI 27301-22600

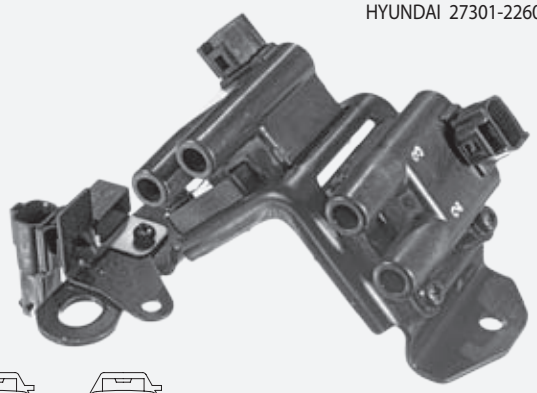

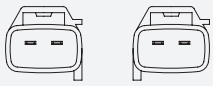

HYUNDAI				
Accent II (LC)	1.3	01.00-11.05	55	G4EA
	1.3	01.00-11.05	61	G4EA
	1.3	08.02-11.05	62	G4EH
	1.3	01.00-11.05	63	G4EA
Accent II Sedan	1.3	01.00-11.05	55	G4EA
	1.3	01.00-11.05	63	G4EA
Getz (TB)	1.3	09.03-09.05	63	G4EA
	1.3 i	09.02-03.04	60	G4EA

CL525

DIN

OEM-No.
HYUNDAI 27301-32800
27301-32810
27301-32820
MITSUBISHI MD 104696

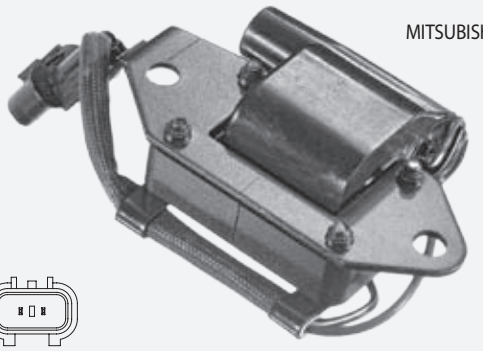

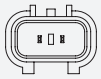

HYUNDAI				
H-1 / Starex	2.4	06.97-07.01	82	G4CS
	2.4 4WD	02.98-07.01	82	G4CS
H-1 Van	2.4	03.00-04.04	82	G4CS
H100 Bus (P)	2.4	01.97-03.00	84	G4CS
	2.4	07.93-03.00	90	G4CS
H100 Van	2.4	10.97-12.04	82	G4CS
	2.4	07.93-07.97	90	G4CS
Sonata II (Y-2)	3.0 i V6	01.91-10.93	107	G6AT
Sonata III (Y-3)	1.8 i	05.93-06.98	72	G4CM
	2.0 i	08.96-06.98	70	G4EP
	2.0 i	06.94-08.96	77	G4CP
	3.0 i V6	05.93-06.98	107	G6AT
MITSUBISHI				
Galant IV (E3_A)	2.0	04.89-10.92	80	4G63 (SOHC 8V)
	2.0 4WD	04.89-10.92	80	4G63 (SOHC 8V)
Galant IV Sedan	2.0	11.87-10.92	80	4G63 (SOHC 8V)
	2.0 4WD	12.88-10.92	80	4G63 (SOHC 8V)
Sapporo III (E16A)	2.4	06.87-08.90	91	4G64 (8V)

CL526

DIN

OEM-No.
HYUNDAI 27301-33010
27301-33020
MITSUBISHI MD 126461

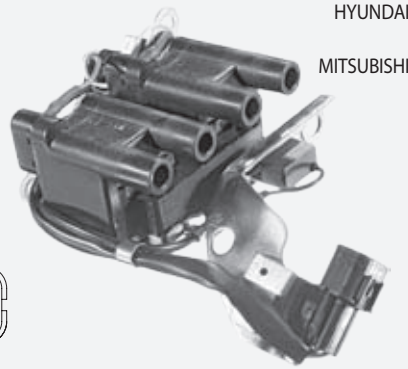

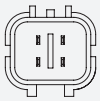

HYUNDAI				
Lantra I (J-1)	1.6 i.e. 16V	10.90-11.95	78	G4CR
	1.6 i.e. 16V	10.90-11.95	84	G4CR
	1.8 i.e. 16V	10.90-11.95	93	G4CN
Sonata II (Y-2)	2.0 i	01.91-10.93	80	G4CP-U
	2.0 i 16V	01.91-10.93	96	G4CP-D
Sonata III (Y-3)	2.0 i 16V	06.96-06.98	92	G4CP-DM
	2.0 i 16V	05.93-06.98	102	G4CP-D
MITSUBISHI				
Colt III (C5_A)	1.6 GTi 16V	04.88-05.90	91	4G61
Galant IV (E3_A)	2.0 GTI 16V	11.88-10.92	106	4G63 (DOHC 16V)
	2.0 GTI 16V	11.88-10.92	107	4G63 (DOHC 16V)
	2.0 GTI 16V 4x4	07.89-12.92	106	4G63 (DOHC 16V)
Galant IV Sedan	2.0 GTI 16V	11.87-10.92	106	4G63 (DOHC 16V)
	2.0 GTI 16V	11.88-10.92	107	4G63 (DOHC 16V)
	2.0 GTi 16V 4WD	06.88-10.92	106	4G63 (DOHC 16V)

CL527

DIN

OEM-No.
HYUNDAI 27301-37110
27301-37120

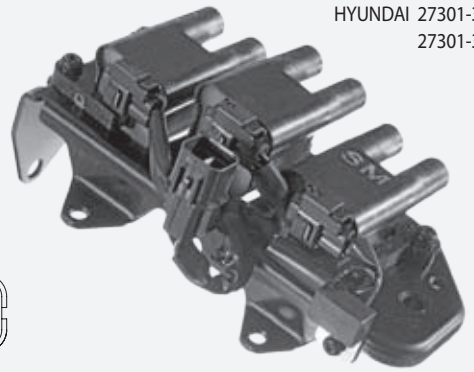

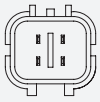

HYUNDAI				
Coupe (GK)	2.7 V6	01.07-08.09	121	G6BA-G
	2.7 V6	03.02-08.09	123	G6BA-G
Santa Fé I (SM)	2.7 V6 4x4	02.01-03.06	127	G6BA-G

CL528

DIN

OEM-No.
HYUNDAI 27301-37100

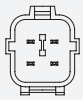

HYUNDAI				
Sonata IV (EF)	2.5 V6 24V	06.98-10.01	118	G6BV-G
	2.7 V6	10.01-11.04	127	G6BA-G

< CL528

HYUNDAI				
Trajet (FO)	2.7 V6	09.00-07.08	127	G6BA-G
KIA				
Magentis (GD)	2.5 V6	05.01-	124	G6BV

CL529

DIN

OEM-No.
KIA 0K30A 18 10X

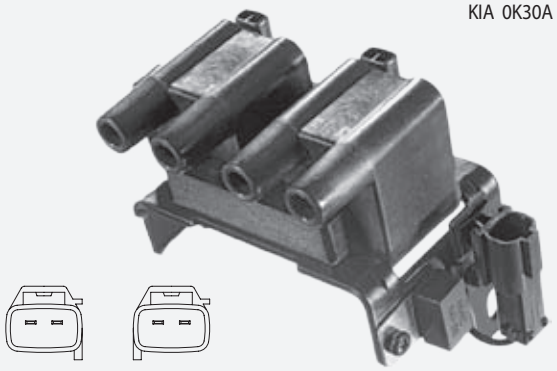

KIA				
Rio Combi (DC)	1.3	08.00-02.05	55	A3E
	1.3	08.00-02.05	60	A3E
Rio Sedan (DC_)	1.3	09.00-02.05	55	A3E
	1.3	08.02-02.05	60	A3E

CL530

DIN

OEM-No.
KIA 0K30E 18 10X
0K30E 18 10XZ

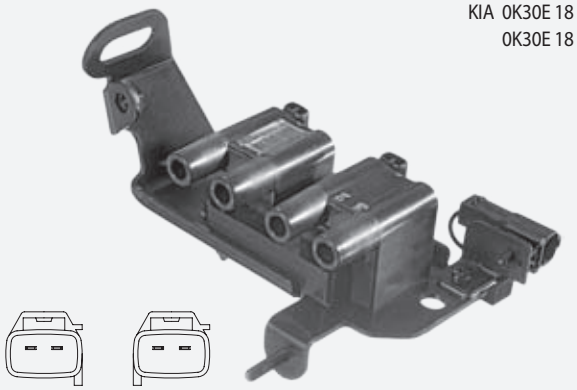

KIA				
Carens II (FJ)	1.6	04.03-09.05	77	GA6D
Rio Combi (DC)	1.5 16V	09.02-02.05	71	A5D
	1.5 16V	08.00-02.05	72	A5D
Rio Sedan (DC_)	1.5 16V	09.00-02.05	72	A5D
Shuma II (FB)	1.6	05.01-08.04	75	GA6D
Shuma II Sedan	1.6	05.01-05.04	75	GA6D

CL531

DIN

OEM-No.
KIA 0K9BV 18 10X

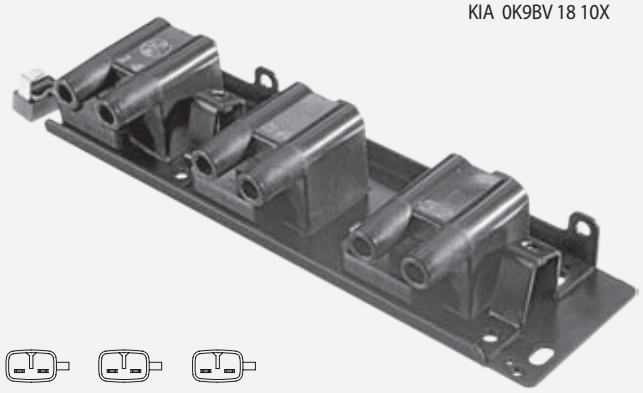

KIA				
Carnival I (UP)	2.5 V6	08.99-10.01	121	KRV6
Carnival II (GQ)	2.5 V6	10.01-	110	K5

CL532

DIN

OEM-No.
KIA 27301-33510
27301-33520

HYUNDAI				
Santamo	2.0 16V	05.99-	102	G4JP
	2.0 16V 4x4	05.99-	102	G4CP
KIA				
Joice	2.0	09.01-	88	G4CP
	2.0	02.00-	102	G4CP
MITSUBISHI				
Santamo	2.0 16V	05.99-12.04	102	4G63 (DOHC 16V)
	2.0 16V 4WD	05.99-12.04	102	4G63 (DOHC 16V)

CL533

DIN

OEM-No.
SUZUKI 33410-66D00
33410-66D01
33410-66D10

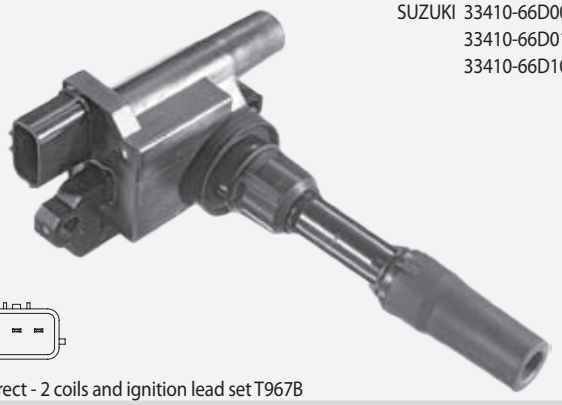

semidirect - 2 coils and ignition lead set T967B

SUZUKI				
Grand Vitara I (FT)	1.6 4x4	03.98-07.03	69	G16B
Jimny (FJ)	1.3 16V	09.98-	59	G13BB
	1.3 16V 4WD	09.98-	59	G13BB

CL534

OEM-No.
NISSAN 22448-AX001

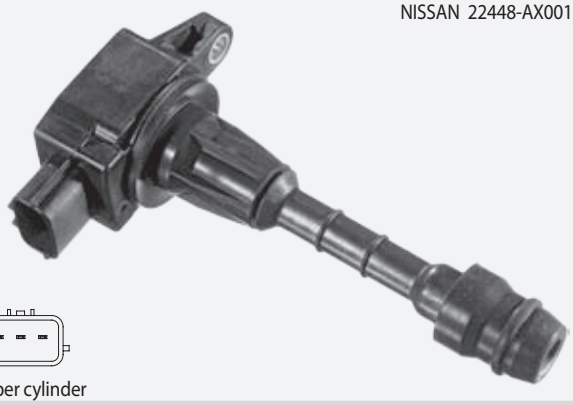

1 coil per cylinder

NISSAN				
Micra C+C (K12)	1.4 16V	08.05-	65	CR14DE
Micra III (K12)	1.0 16V	01.03-06.10	48	CG10DE
	1.2 16V	01.03-06.10	48	CR12DE/CG12DE
	1.2 16V	01.03-06.10	59	CR12DE/CG12DE
	1.4 16V	01.03-06.10	65	CR14DE
Note (E11)	1.4	03.06-	65	CR14DE

CL535

OEM-No.
NISSAN 22448-31U01
22448-31U11
22448-31U00

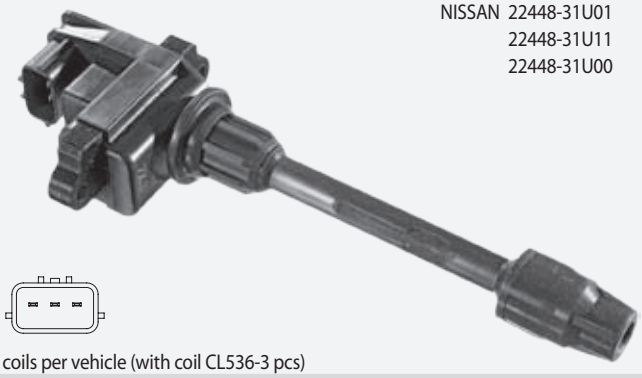

3 coils per vehicle (with coil CL536-3 pcs)

INFINITI				
I30	3.0	01.97-	142	VQ30DE
NISSAN				
Maxima QX (A32)	2.0	02.95-08.00	103	VQ20DE
	2.5 V6 24V	02.95-08.00	140	VQ25DE
	3.0	01.95-08.00	142	VQ30DE
Maxima QX (A33)	2.0 V6 24V	03.00-11.03	103	VQ20DE
	2.5 V6 24V	03.00-11.03	154	VQ25DE
	3.0 V6 24V	03.00-11.03	147	VQ30DE
Maxima St. Wagon	2.0 QX	10.97-	103	VQ20DE
	2.5 V6 24V	10.97-	140	VQ25DE
	3.0 QX	10.97-	142	VQ30DE

CL536

OEM-No.
NISSAN 22448-31U06
22448-31U16
22448-31U05

3 coils per vehicle (with coil CL535-3 pcs)

INFINITI				
I30	3.0	01.97-	142	VQ30DE
NISSAN				
Maxima QX (A32)	2.0	02.95-08.00	103	VQ20DE
	2.5 V6 24V	02.95-08.00	140	VQ25DE
	3.0	01.95-08.00	142	VQ30DE
Maxima QX (A33)	2.0 V6 24V	03.00-11.03	103	VQ20DE
	2.5 V6 24V	03.00-11.03	154	VQ25DE
	3.0 V6 24V	03.00-11.03	147	VQ30DE
Maxima St. Wagon	2.0 QX	10.97-	103	VQ20DE
	2.5 V6 24V	10.97-	140	VQ25DE
	3.0 QX	10.97-	142	VQ30DE

CL537

OEM-No.
NISSAN 22448-2Y000
22448-2Y001

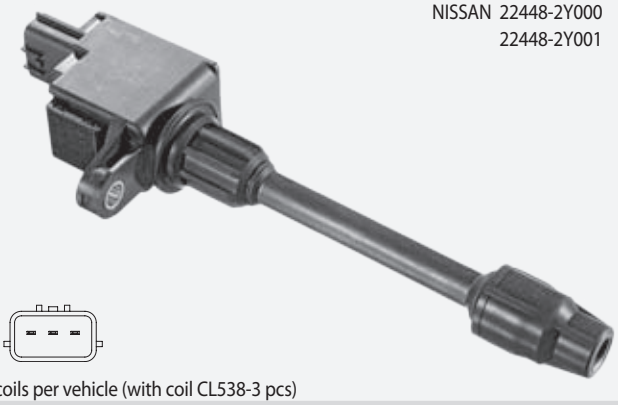

3 coils per vehicle (with coil CL538-3 pcs)

NISSAN				
Maxima II (J30)	3.0 i	10.88-06.94	125	VG30E

CL538

OEM-No.
NISSAN 22448-2Y005

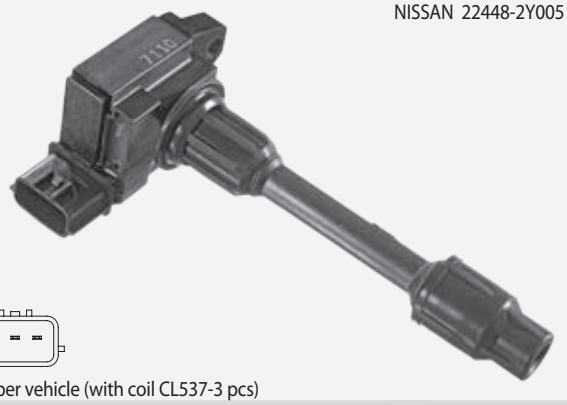

3 coils per vehicle (with coil CL537-3 pcs)

NISSAN				
Maxima II (J30)	3.0 i	10.88-06.94	125	VG30E

CL539

DIN

OEM-No.
HYUNDAI 27301-23500
27301-23510

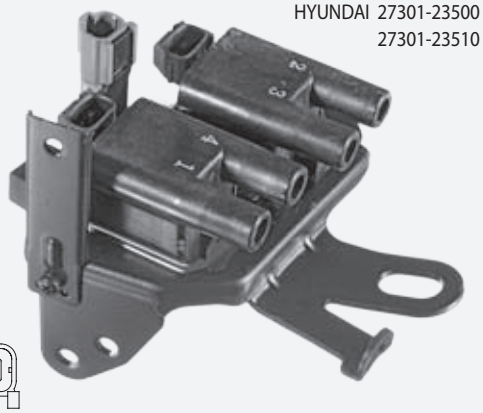

HYUNDAI				
Coupe (GK)	2.0	08.01-08.09	100	G4GC-G
	2.0	03.02-08.09	102	G4GC-G
	2.0 GLS	02.03-08.09	105	G4GC-G
Elantra (XD)	1.8	06.00-07.06	97	G4BB
	2.0	06.00-07.06	102	G4GC-G
	2.0	06.00-07.06	104	G4GC
Elantra Sedan	1.8	06.00-07.06	97	G4BB
	2.0	06.00-07.06	102	G4GC-G
	2.0	06.00-07.06	104	G4GC
Matrix (FC)	1.8	06.01-08.10	90	G4GB-G

CL540

OEM-No.
HYUNDAI HQ808700
MITSUBISHI HQ808700

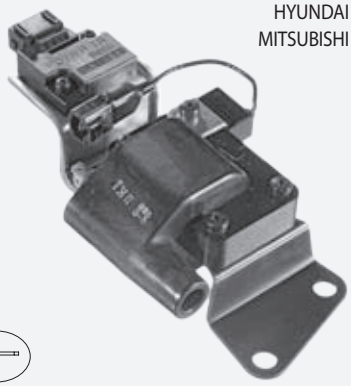

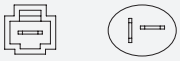

HYUNDAI				
Galloper I	3.0 V6	08.91-07.98	104	6G72

CL541

DIN
OEM-No.
KIA 27301-02700
27301-02710

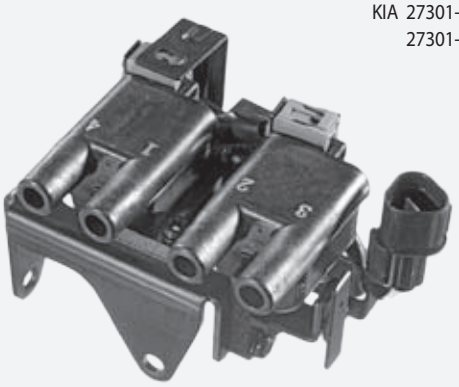

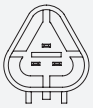

HYUNDAI				
Atos (MX)	1.1	03.04-	46	G4HG
Atos Prime (MX)	1.1	09.05-	46	G4HG
i10 (PA)	1.1	01.08-	49	G4HG
	1.1	04.11-	51	G4HG
KIA				
Picanto (BA)	1.0	04.04-	45	G4HE
	1.0	11.09-	46	G4HE
	1.1	04.04-	48	G4HG

CL542

OEM-No.
TOYOTA 90080-19017
90080-1901700

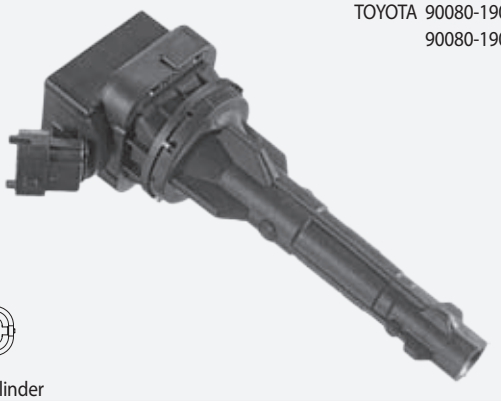

1 coil per cylinder

TOYOTA				
Aygo (WNB1, KGB1)	1.0	07.05-	50	1KR-FE
Corolla (E11)	1.4 16V	02.00-11.01	71	4ZZ-FE
Corolla Compact (E11)	1.4	02.00-01.02	71	4ZZ-FE
Corolla Liftback (E11)	1.4	02.00-01.02	71	4ZZ-FE
Corolla Wagon (E11)	1.4 16V	02.00-10.01	71	4ZZ-FE
Yaris (_ _P9_)	1.0 VVT-i	08.05-	51	1KR-FE

CL543

DIN
OEM-No.
MITSUBISHI MD113551
MD131711

MITSUBISHI				
Pajero I	3.0 V6	11.88-11.90	104	6G72 (SOHC 12V)
Pajero I Canvas Top	2.6	01.83-11.90	76	4G54
Pajero II	3.0 V6 4WD	12.90-12.95	110	6G72 (SOHC 12V)
Pajero II Canvas Top	3.0 V6	12.90-12.95	110	6G72 (SOHC 12V)

CL544

PIN
OEM-No.
KIA 0K011 18 100

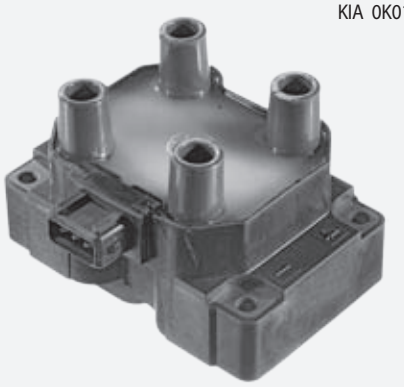

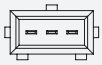

KIA				
Sportage (K00)	2.0 i 4WD	04.94-08.99	70	FE (8V)

CL545

DIN
OEM-No.
KIA 0K9A2 18 10XB

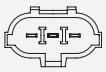

KIA				
CLarus (K9A)	2.0 i 16V	07.96-	98	FE (16V)
CLarus Combi (GC)	2.0 i 16V	05.98-	98	FE (16V)

CL546

DIN

OEM-No.
KIA 27301-26600

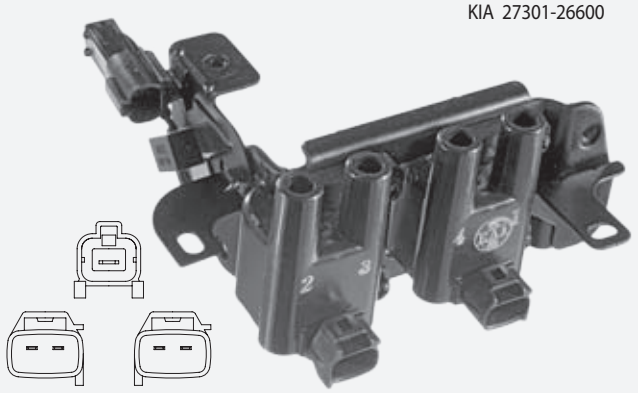

HYUNDAI				
Accent II (LC)	1.6	12.02-11.05	77	G4ED-G
Accent II Sedan	1.6	12.02-11.05	77	G4ED-G
Accent III (MC)	1.4 GL	11.05-11.10	71	G4EE
	1.6 GLS	11.05-11.10	82	G4ED
Accent III Sedan	1.4 GL	11.05-11.10	71	G4EE
	1.6 GLS	11.05-11.10	82	G4ED
Coupe (GK)	1.6 16V	03.02-08.09	77	G4ED-G
	1.6 16V	03.02-08.09	79	G4ED-G
Elantra (XD)	1.6	05.03-07.06	77	G4ED-G
	1.6	06.00-07.06	79	G4ED-G
Elantra Sedan	1.6	05.03-07.06	77	G4ED-G
	1.6	06.00-07.06	79	G4ED-G
Getz (TB)	1.6	09.02-09.05	77	G4ED-G
	1.6	08.05-	78	G4ED-G
Matrix (FC)	1.6	06.01-08.10	76	G4ED-G
	1.6	01.02-12.05	66	G4ED-L
KIA				
Cerato (LD)	1.6	07.04-	77	G4ED
Cerato Sedan	1.6	04.04-	77	G4ED
Rio II (JB)	1.4 16V	03.05-	71	G4EE
	1.6 CVVT	03.05-	82	G4ED
Rio II Sedan	1.4 16V	03.05-	71	G4EE
	1.6 16V	03.05-	82	G4ED

CL547

DIN Ø5

OEM-No.
MITSUBISHI MD362907
MD325048

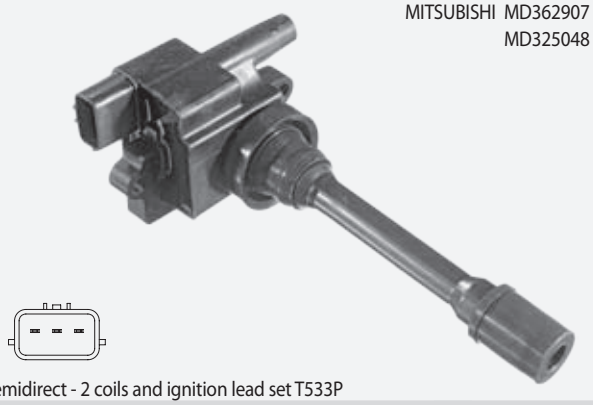

semidirect - 2 coils and ignition lead set T533P

MITSUBISHI				
Carisma (DA_)	1.6	05.96-06.06	66	4G92
	1.6	01.00-06.06	70	4G92
	1.6	05.97-06.06	73	4G92
	1.6	09.00-06.06	76	4G92
	1.8	05.96-06.06	85	4G93
	1.8 16V	07.95-06.06	103	4G93
Carisma Sedan	1.3	09.00-10.04	55	4G13 (12V)
	1.6	09.96-06.06	66	4G92
	1.6	01.00-06.06	70	4G92
	1.6	05.97-06.06	73	4G92
	1.6	09.00-06.06	76	4G92
	1.8	09.96-06.06	85	4G93
Colt IV (CA_A)	1.6	03.96-04.96	66	4G92

< CL547

MITSUBISHI				
Colt V (CJ_, CP_)	1300	09.00-09.03	60	4G13 (16V)
	1600	09.00-09.03	76	4G92
	1600 GLX	05.96-09.00	66	4G92
Galant VI (EA_)	2.0	09.00-10.04	98	4G63 (SOHC 16V)
	2.0	09.96-09.00	100	4G63 (SOHC 16V)
	2.4 GDI	09.00-10.04	106	4G64 (GDI)
	2.4 GDI	02.99-09.00	110	4G64 (GDI)
Galant VI Stat. Wagon	2.0	09.96-09.00	100	4G63 (SOHC 16V)
	2.0	09.00-10.03	98	4G63 (SOHC 16V)
	2.4 GDI	09.00-10.03	106	4G64 (GDI)
	2.4 GDI	02.99-10.03	110	4G64 (GDI)
Lancer VI (CJ-CP_)	1.6 16V	12.95-08.03	66	4G92
Lancer Combi (CS_W)	2.0	09.03-12.07	99	4G63 (DOHC 16V)
Lancer Sedan (CS_A)	2.0	12.03-	99	4G63 (DOHC 16V)
Outlander I (CU_W)	2.4 4WD	05.03-10.06	102	4G64 (SOHC 16V)
Pajero II Canvas Top	1.8 GDI	06.98-04.00	96	4G93 (GDI)
Pajero Pinin	1.8	11.01-06.07	84	4G93
	1.8 GDI	10.99-06.07	88	4G93 (GDI)
Space Runner (N6_W)	2.0	08.99-08.02	100	4G63 (DOHC 16V)
Space Star (DG_A)	1.8 GDI	06.98-12.04	87	4G93 (GDI)
	1.8 GDI	06.98-12.04	90	4G93 (GDI)
	1.8 MPI	10.02-12.04	82	4G93
Space Wagon (N3_W)	2.0	10.92-10.98	98	4G63 (DOHC 16V)
	2.0 4WD	10.92-10.98	98	4G63 (DOHC 16V)
Space Wagon (N9_W)	2.0 GDI	10.98-12.04	98	4G63 (SOHC 16V)
	2.4 GDI	10.98-12.04	110	4G64 (GDI)
	2.4 GDI	09.00-12.04	108	4G64 (GDI)
	2.4 GDI 4WD	10.98-12.04	110	4G64 (GDI)
	2.4 GDI 4WD	09.00-12.04	108	4G64 (GDI)

CL548

PIN

OEM-No.
KIA 0K013 18 100

semidirect - 2 coils and ignition lead set T108B

KIA				
Sportage (K00)	2.0	10.00-08.03	87	FE (16V)
	2.0 4WD	10.00-08.03	87	FE (16V)
	2.0 i 16V	10.99-08.03	94	FE (16V)
	2.0 i 16V 4WD	04.94-08.03	94	FE (16V)

CL549

OEM-No.
MITSUBISHI MD 362913

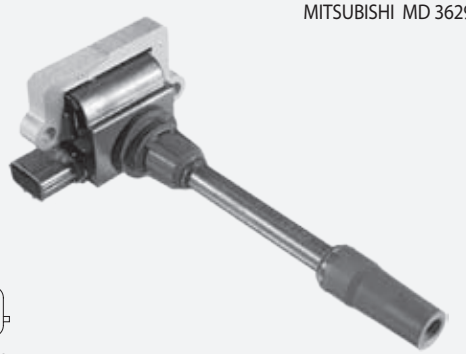

1 coil per cylinder

MITSUBISHI				
Carisma (DA_)	1.8 GDI	10.00-06.06	90	4G93 (GDI)
	1.8 16V	07.95-06.06	103	4G93

< CL549

MITSUBISHI				
Carisma (DA_)	1.8 16V GDI	09.97-06.06	92	4G93 (GDI)
Carisma Sedan	1.8 GDI	10.00-06.06	90	4G93 (GDI)
	1.8 16V GDI	09.97-06.06	92	4G93 (GDI)
Pajero Pinin	1.8	11.01-06.07	84	4G93
	1.8 GDI	10.99-06.07	88	4G93 (GDI)
	2.0 GDI	10.00-06.07	95	4G94 (GDI)
Space Star (DG_A)	1.8 GDI	06.98-12.04	87	4G93 (GDI)
	1.8 GDI	06.98-12.04	90	4G93 (GDI)

CL550

OEM-No.
HONDA 30520-P8E-A01
30520-P8F-A01
30520-P8F-A02
30520-RCA-A02

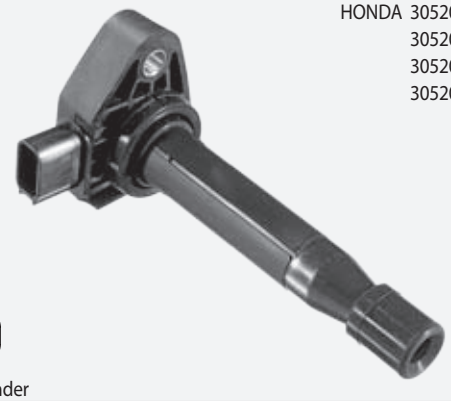

1 coil per cylinder

HONDA				
Accord VI Coupe	3.0 V6 24V	02.98-06.03	147	J30A1
Civic VII Coupe (EM2)	1.7 i	05.01-12.05	88	D17A8
	1.7 i VTEC	05.01-12.05	92	D17A5/D17A9
Civic VII Sedan (ES)	1.7	02.01-09.05	85	D17A6
FR-V (BE)	1.7	08.04-	92	D17A2
Legend IV (KB_)	3.5 V6 4WD	05.06-	217	J35A8/C35A8
Stream (RN)	1.7 16V	05.01-	92	D17A2

CL551

DIN
OEM-No.
HYUNDAI 27301-02100

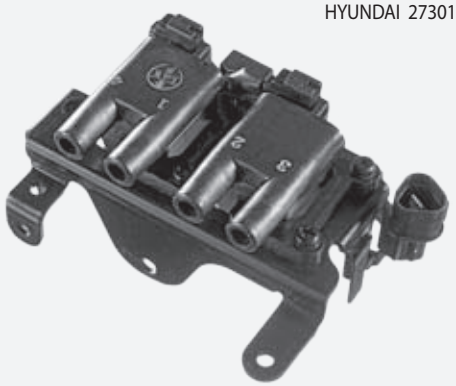

HYUNDAI				
Getz (TB)	1.1	09.02-09.05	46	G4HD
	1.1	09.05-06.09	49	G4HD

CL552

DIN Ø5
OEM-No.
HYUNDAI 27300-39000
27300-39050

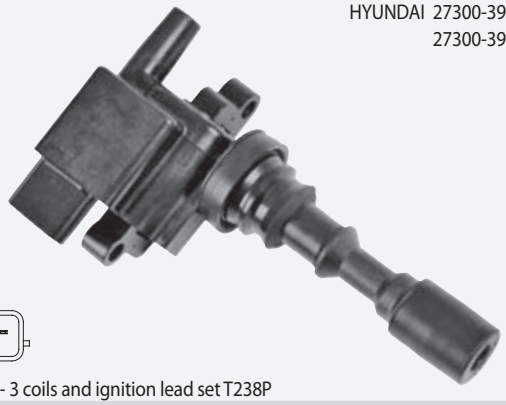

semidirect - 3 coils and ignition lead set T238P

HYUNDAI				
XG (XG)	30	12.98-12.05	138	G6CT-G
	350	10.02-12.05	145	G6CU
KIA				
Carnival II (GQ)	3.5	07.02-	143	G6CU
Sorento I (JC)	3.5 V6 4WD	08.02-	143	G6CU

CL553

PIN
OEM-No.
HYUNDAI 27300-39700

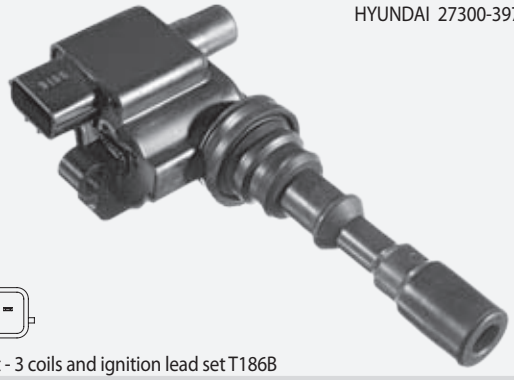

semidirect - 3 coils and ignition lead set T186B

KIA				
Opirus (GH)	3.5	09.03-	149	G6CU

CL554

OEM-No.
NISSAN 22448ED800
22448ED800EP

1 coil per cylinder

NISSAN				
Cube (Z12)	1.6 16V	03.10-	81	HR16DE
Micra C+C (K12)	1.6 160 SR	08.05-	81	HR16DE
Micra III (K12)	160 SR 1.6	05.05-06.10	81	HR16DE
Note (E11)	1.6	03.06-	81	HR16DE
Qashqai / Qashqai +2	1.6	02.07-	84	HR16DE
Tiida CC (C11X)	1.6	09.07-	81	HR16DE
	1.8	09.07-	93	MR18DE
Tiida Sedan (SC11X)	1.6	09.07-	81	HR16DE
	1.8	09.07-	93	MR18DE
X-Trail (T31)	2.0	06.08-	103	MR20DE
	2.0	06.07-	104	MR20DE
	2.0 FWD	06.08-	103	MR20DE
	2.0 FWD	03.07-	104	MR20DE

CL555

OEM-No.
PSA 597088
TOYOTA 90080-19015
90080-19019
90919-T2002
90919-02239

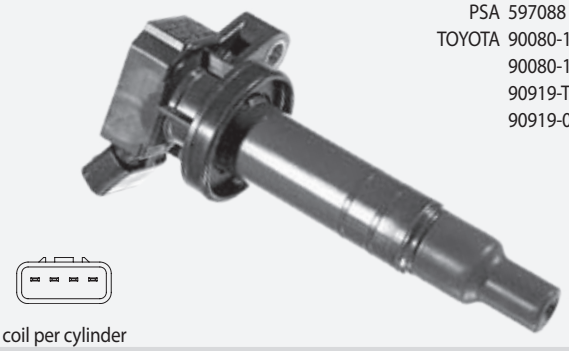

1 coil per cylinder

CITROEN				
C1 (PM_, PN_)	1.0	06.05-	50	1KR-FE
DAIHATSU				
Cuore VIII	1.0	04.07-	51	1KR-FE
PEUGEOT				
107	1.0	06.05-	50	1KR (384 F)
SUBARU				
Justy IV	1.0	01.07-	51	1KR-FE
TOYOTA				
Auris	1.4 VVTi	03.07-	71	4ZZ-FE
Avensis (_T22_)	1.6 VVT-i	10.00-02.03	81	3ZZ-FE
	1.8 VVT-i	10.00-02.03	95	1ZZ-FE
Avensis (T25_)	1.6 VVT-i	04.03-11.08	81	3ZZ-FE
	1.8	04.03-11.08	95	1ZZ-FE
Avensis Combi (T25)	1.6 VVT-i	04.03-11.08	81	3ZZ-FE
	1.8	04.03-11.08	95	1ZZ-FE
Avensis Liftback (T22)	1.6 VVT-i	10.00-02.03	81	3ZZ-FE
	1.8 VVT-i	10.00-02.03	95	1ZZ-FE
Avensis Sedan (T25)	1.6 VVT-i	04.03-11.08	81	3ZZ-FE
	1.8	04.03-11.08	95	1ZZ-FE
Avensis Stat. Wagon	1.6 VVT-i	10.00-02.03	81	3ZZ-FE
	1.8 VVT-i	10.00-02.03	95	1ZZ-FE
Aygo (WNB1_, KGB1_)	1.0	07.05-	50	1KR-FE
Celica (ZZT23_)	1.8 16V VT-i	08.99-07.05	105	1ZZ-FE
Corolla (E11)	1.6 16V	02.00-11.01	81	3ZZ-FE
Corolla (E12)	1.4 VVT-i	01.02-12.06	71	4ZZ-FE
	1.6 VVT-i	01.02-12.06	81	3ZZ-FE
Corolla Combi (E12)	1.4 VVT-i	01.02-02.07	71	4ZZ-FE
	1.6 VVT-i	01.02-02.07	81	3ZZ-FE
Corolla Compact (E11)	1.6	02.00-01.02	81	3ZZ-FE
Corolla Liftback (E11)	1.6	02.00-01.02	81	3ZZ-FE
Corolla Sedan (E12)	1.4 VVT-i	08.02-07.07	71	4ZZ-FE
	1.6 VVT-i	08.02-07.07	81	3ZZ-FE
Corolla Verso (E12)	1.6 VVT-i	01.02-05.04	81	3ZZ-FE
	1.8 VVT-i	01.02-05.04	99	1ZZ-FE
	1.8 VVTi 4WD	10.01-02.04	99	1ZZ-FE
Corolla Verso (ZER)	1.6	04.04-03.09	81	3ZZ-FE
	1.8	04.04-03.09	95	1ZZ-FE
Corolla Wagon (E11)	1.6 16V	02.00-10.01	81	3ZZ-FE
MR 2 III (ZZW3_)	1.8 16V VT-i	10.99-06.07	103	1ZZ-FE
RAV 4 II	1.8 VVTi	08.00-11.05	92	1ZZ-FE
Yaris (_ _P9_)	1.0 VVT-i	08.05-	51	1KR-FE
Yaris (NHP13_)	1.0	09.11-	51	1KR-FE

CL556

OEM-No.
HONDA 30520-PNA-007
30520-RAA-007
30520-RRA-007

1 coil per cylinder

HONDA				
Accord VII (CL)	2.0	02.03-05.08	114	K20A6
	2.0 Allrad	02.03-05.08	114	K20A6
	2.4	02.03-05.08	140	K24A3/K24A
Accord VII Tourer	2.0	04.03-05.08	114	K20A6
	2.4	04.03-05.08	140	K24A
Civic VII Hatchback	2.0 i Sport	09.01-09.05	118	K20A3
	2.0 Type-R	09.01-09.05	147	K20A2
Civic VIII Hatchback	2.0 Type R	09.06-	148	K20Z4
CR-V II (RD_)	2.0	09.01-09.06	110	K20A4
CR-V III (RE)	2.0 i 4WD	01.07-	110	R20A2
FR-V (BE)	2.0	02.05-	110	K20A9
Stream (RN)	2.0 16V	05.01-	115	K20A1

CL557

OEM-No.
SUZUKI 33410-77E20
33410-77E21
33410-77E22

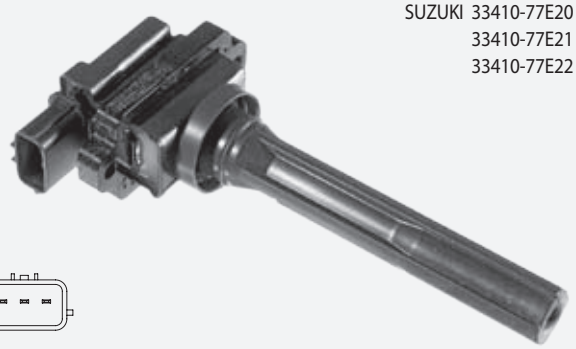

1 coil per cylinder

SUZUKI				
Baleno (EG)	1.8 GTX	03.96-05.02	89	J18A
Baleno CC (EG)	1.8 GTX	03.96-05.02	89	J18A
Baleno Combi (EG)	1.8 i 16V	08.96-05.02	89	J18A
Grand Vitara I (FT)	2.0 4x4	03.98-07.03	94	J20A
	2.5 V6 24V	04.98-07.03	106	H 25 A
	2.5 V6 24V 4x4	04.01-07.03	116	H 25 A
	2.7 4x4	09.01-07.03	127	H 27 A
	2.7 4x4	04.03-07.03	135	H 27 A
Grand Vitara II (JT)	2.0 Allrad	10.05-	103	J20A
Vitara (ET, TA)	2.0 16V Allrad	12.96-03.98	97	J20A
	2.0 V6 24V Allrad	12.94-03.98	100	H 20 A
	2.5 V6 24V Allrad	12.95-03.98	118	H 25 A
Vitara Cabrio (ET,TA)	2.0 16V	12.96-03.99	97	J20A

CL558

DIN

OEM-No.
KIA KK137-18-10X
KK137-18-10XC
MITSUBISHI MD-160532

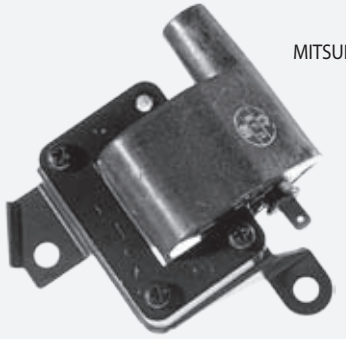

HYUNDAI				
Galloper II (JK-01)	3.0 V6	08.98-12.03	104	G6AT
KIA				
Avella	1.3	11.95-12.01	55	B3
	1.5	02.97-12.01	55	
Avella CC	1.3	11.95-12.01	55	B3
	1.5	02.97-12.01	55	
Pride (DA)	1.1 i	01.91-	38	B1
	1.3 16V	01.90-	44	B3
	1.3 16V	10.96-	47	B3
	1.3 16V	01.90-	53	B3
	1.3 i	01.90-	51	
Pride Combi	1.3	08.99-	47	
MITSUBISHI				
Pajero II	2.4	04.91-10.99	82	4G64 (12V)
Pajero II Canvas Top	2.4	04.91-04.00	82	4G64 (12V)
Sigma (F2_A, F1_A)	3.0 V6	12.90-07.96	130	6G72 (SOHC 12V)
	3.0 V6	12.90-07.96	151	6G72 (DOHC 24V)
Sigma Station Wagon	3.0	06.92-10.96	125	6G72 (SOHC 12V)
NISSAN				
Bluebird (T72 , T12)	1.8 Turbo	12.85-05.90	99	CA18T
Bluebird (U11)	1.8 Turbo	04.84-05.90	99	CA18T
Bluebird Hatch. (T_)	1.8 Turbo	12.85-11.92	99	CA18T
Sunny II (N13)	1.6 i	06.86-10.90	54	E16i
	1.6 i 4x4	06.86-10.90	54	E16i
Sunny II Hatchback	1.6 i	06.86-10.90	54	E16i

CL559

DIN

OEM-No.
MAZDA F210-18-100
F210-18-100B
F211-18-100A
JF01-18-100B

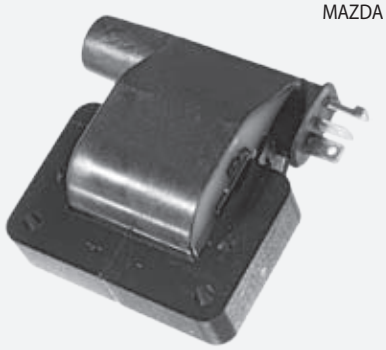

MAZDA				
323 III (BF)	1.3	08.85-05.89	44	E3
	1.6 GT	11.86-10.89	63	B6 (SOHC)
	1.6 GT Turbo	10.85-11.91	103	B6T
323 III Hatchback	1.3	09.85-12.87	44	E3
	1.6 GT	09.87-10.89	63	B6 (SOHC)
	1.6 GT Turbo	10.85-08.93	103	B6T
	1.6 GT Turbo 4WD	10.87-11.91	103	B6T
626 III (GD)	2.0	09.87-10.90	66	FE (12V)
	2.0 12V	09.87-05.92	79	FE (12V)
	2.0 16V	11.87-05.92	103	FE (16V)
	2.0 16V	07.87-09.89	109	FE (16V)
	2.2 12V	11.87-07.91	85	F2
	2.2 12V 4WD	01.90-05.92	85	F2

< CL559

MAZDA				
626 III Coupe (GD)	2.0 12V	09.87-12.88	79	FE (12V)
	2.0 16V	12.87-10.90	103	FE (16V)
	2.0 16V	06.87-09.89	109	FE (16V)
	2.2 12V	04.88-12.91	85	F2
626 III Hatchback	2.0	09.87-10.90	66	FE (8V)
	2.0 12V	11.87-05.92	79	FE (12V)
	2.0 16V	11.87-10.90	103	FE (16V)
	2.0 16V	06.87-08.89	109	FE (16V)
	2.2 12V	06.88-04.92	85	F2
	2.2 12V 4WD	11.87-07.90	85	F2
626 III Station Wagon	2.0	10.88-09.97	66	FE (8V)
	2.0 16V	01.88-03.92	103	FE (16V)
	2.2 12V	03.89-11.96	85	F2
	2.2 12V 4WD	05.91-11.92	85	F2L1/F2
929 III (HC)	2.0	06.87-12.88	85	FEFA/FE (8V)
	2.2 12V	01.88-04.89	85	F21/F2E/F2
	2.2 12V	04.89-06.91	94	F2-C
	2.2 i	05.87-12.88	100	F2-EGI
	3.0	01.88-12.89	125	JE3
	3.0	06.87-06.91	140	JE
	3.0 i	01.90-06.91	123	JE3
SUZUKI				
Swift II CC (EA, MA)	1.3 GTi	03.89-05.01	74	G13B

CL560

DIN

OEM-No.
HONDA 30500-PR4-A02

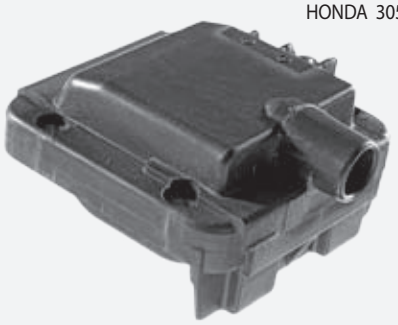

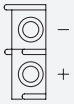

HONDA				
Civic II Shuttle (EE)	1.6 i 16V 4WD	01.88-12.89	80	D16A6
Civic IV Hatchback	1.5 i 16V	10.88-09.91	66	D15B2
	1.5 i 16V	10.88-09.91	69	D15B2
	1.6 i 16V	10.87-09.91	80	D16A6
	1.6 i 16V	10.87-09.91	81	D16Z2
	1.6 i 16V Vtec	10.89-09.91	110	B16A1
Civic IV Sedan	1.6 i 16V	11.87-09.91	80	D16A6
	1.6 i 16V	10.87-09.91	81	D16Z2
	1.6 i 16V 4x4	10.89-09.91	80	D16A6
Civic V Sedan	1.6 VTi 16V	10.91-11.95	118	B16A2
Concerto (HW)	1.5 i 16V	08.89-03.95	66	D15B2

CL561

DIN

OEM-No.
FIAT 71742420
SUZUKI 33400-65G00
33400-65G01
33400-65G02

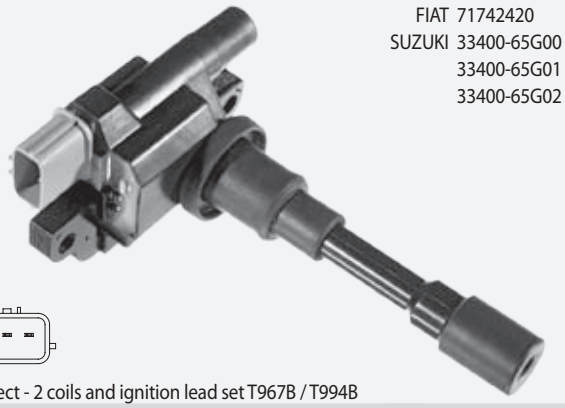

semidirect - 2 coils and ignition lead set T967B / T994B

FIAT				
Sedici	1.6 16V	06.06-06.09	79	M16A

CL561 ▶

< CL561

FIAT				
Sedici	1.6 16V	06.06-06.09	88	M16A
	1.6 16V 4x4	06.06-06.09	79	M16A
	1.6 16V 4x4	06.06-06.09	88	M16A
SUBARU				
Justy II (JMA, MS)	1.3 4x4	04.01-11.03	63	G13BB
Justy III (G3X)	1.5	09.03-	73	M15A
SUZUKI				
Alto (HA24)	1.1	09.04-12.08	46	F10DN/F10D
Baleno (EG)	1.3	02.99-05.02	52	G13BA
	1.3 i 16V	02.99-05.02	63	G13BB
	1.6 i 16V	02.99-05.02	72	G16B
	1.6 i 16V 4x4	02.99-05.02	72	G16B
Baleno CC	1.3	09.96-05.02	52	G13BA
	1.3 i 16V	02.99-05.02	63	G13BB
	1.6 i 16V	02.99-05.02	72	G16B
	1.6 i 16V 4x4	02.99-05.02	72	G16B
Baleno Combi	1.3 16V	02.99-05.02	63	G13BB
	1.6 i 16V	02.99-05.02	72	G16B
	1.6 i 16V	02.99-05.02	73	G16B
	1.6 i 16V 4x4	02.99-05.02	72	G16B
	1.6 i 16V 4x4	02.99-05.02	73	G16B
Carry Van (FD)	1.3	03.99-	58	G13BB
	1.3 16 V	03.00-	58	G13BB
Grand Vitara II (JT)	1.6 Allrad	04.05-	78	M16A
Ignis (FH)	1.3	10.00-09.03	61	M13A
	1.3 4WD	10.00-09.03	61	M13A
Ignis II	1.3	09.03-	69	M13A
	1.3 4x4	09.03-	69	M13A
	1.5	09.03-	73	M15A
	1.5 4x4	09.03-	73	M15A
	1.5 Sport	12.03-	80	M15A
Jimny (FJ)	1.3 16V	02.01-	60	M13A
	1.3 16V 4WD	02.01-	60	M13A
	1.3 16V 4x4	08.05-	63	M13A
	1.3 4WD	05.14-	62	M13A
Liana (ER)	1.3	03.02-	66	M13A
	1.6	03.02-	76	M16A
	1.6	01.05-	79	M16A
	1.6 4WD	03.02-	76	M16A
	1.6 4WD	04.02-	78	M16A
	1.6 4WD	01.05-12.07	79	M16A
	1.6 i	04.02-	78	M16A
Liana Combi	1.3	07.01-12.07	66	M13A
	1.6	07.01-12.07	76	M16A
	1.6 4WD	07.01-12.07	76	M16A
	1.6 4WD	04.02-12.07	78	M16A
	1.6 4WD	01.05-12.07	79	M16A
	1.6 i	04.02-12.07	78	M16A
Swift Cabriolet	1.3 i	09.91-10.96	50	G13BA
Swift III (MZ, EZ)	1.3	02.05-	68	M13A
	1.3 4x4	01.06-	66	M13A
	1.3 4x4	02.05-	68	M13A
	1.5	02.05-	75	M15A
	1.6	05.06-	92	M16A
SX4 (EY, GY)	1.5	06.06-	73	M15A
	1.5 VVT	07.10-	82	M15A
	1.5 VVT 4x4	07.10-	82	M15A
	1.6 VVT	06.06-	79	M16A
	1.6 VVT	07.09-	88	M16A
	1.6 VVT 4x4	06.06-	79	M16A
	1.6 VVT 4x4	07.09-	82	M16A
	1.6 VVT 4x4	07.09-	88	M16A
SX4 Sedan (GY)	1.6	10.07-	79	M16A
	1.6 AWD	10.07-	88	M16A
Wagon R+ (MM)	1.3	05.00-12.04	56	G13BB
	1.3	09.03-	69	M13A
	1.3 4WD	10.01-	56	G13BB
	1.3 4WD	09.03-	69	M13A

CL562

DIN

OEM-No.
MITSUBISHI MD158956

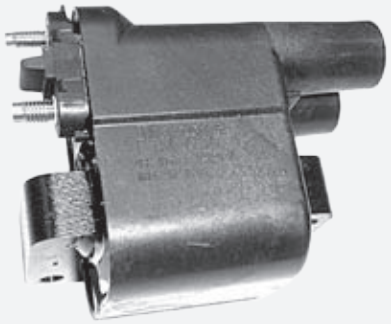

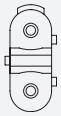

MITSUBISHI				
Eclipse I (D2_A)	2.0 i 16V	04.91-11.95	110	4G63 (DOHC 16V)
	2.0 i 16V 4WD	04.91-11.95	110	4G63 (DOHC 16V)
Galant IV Sedan	1.8	11.87-10.92	66	4G37
	2.0	11.87-10.92	80	4G63 (SOHC 8V)
	2.0 GTI 16V	11.87-10.92	106	4G63 (DOHC 16V)
	2.0 GTI 16V	11.88-10.92	107	4G63 (DOHC 16V)
	2.0 GTi 16V 4WD	06.88-10.92	106	4G63 (DOHC 16V)
Lancer IV	1.6 16V	06.92-05.94	83	4G92
	1.6 4WD	06.92-11.93	84	4G92

CL563

DIN

OEM-No.
DAIHATSU 19500-87201
19500-87202
90048-52070
90048-52072
90048-52077
90048-52078
90048-52079
90048-52084

DAIHATSU				
Applause I	1.6 16V	06.89-07.97	66	HD
Cuore II (L80, L81)	0.8	11.89-12.90	29	ED 10
	0.8	09.85-06.90	32	ED 10
	0.8 4WD	09.86-10.88	32	ED 10
Feroza Hard Top	1.6 16V	10.88-12.99	63	HDC
	1.6 i 16V 4x4	10.88-12.99	70	HD-E
Feroza Soft Top	1.6 16V	10.88-06.92	63	HDC
	1.6 i 16V	10.88-06.90	70	HD-E
Charade III (G10_)	1.0	03.87-12.92	38	CB 23
	1.0	11.90-12.92	40	CB 90
	1.0	04.89-12.92	41	CB 90
	1.0 GTi	03.87-12.92	74	CB 80 T
	1.0 Turbo	03.87-10.90	50	CB 61
	1.3 i	06.88-12.92	66	HCE
	1.3 i 4WD	06.88-01.93	66	HCE
Charade III Sedan	1.3	11.90-02.93	66	HCE
Charade IV (G20_)	1.3	09.96-11.99	44	HC
	1.3 16V	05.96-11.99	55	HCE
	1.3 i 16V	01.93-09.00	62	HCE/HC

CL564

OEM-No.
TOYOTA 90919-02247
90919-02248
90919-A2001
90919-C2002

1 coil per cylinder

TOYOTA				
Avensis (T22)	2.0 VVT-i	10.00-02.03	110	1AZ-FSE
Avensis (T25)	2.0	04.03-11.08	108	1AZ-FSE
	2.4	10.03-11.08	120	2AZ-FSE
	2.4	09.03-11.08	125	2AZ-FSE
Avensis Combi (T25)	2.0	04.03-12.09	108	1AZ-FSE
	2.4	10.03-11.08	120	2AZ-FSE
	2.4	09.03-11.08	125	2AZ-FSE
Avensis Liftback (T22)	2.0 VVT-i	10.00-02.03	110	1AZ-FSE
Avensis Sedan (T25)	2.0	04.03-11.08	108	1AZ-FSE
	2.4	10.03-11.08	120	2AZ-FSE
	2.4	09.03-11.08	125	2AZ-FSE
Avensis St. Wagon	2.0 VVT-i	10.00-02.03	110	1AZ-FSE
Avensis Verso	2.0 VVT-i	09.05-11.09	110	1AZ-FE
Land Cruiser	4.0	01.03-	183	1GR-FE

CL565

DIN

OEM-No.
HYUNDAI 27301-23700
KIA 27301-23700

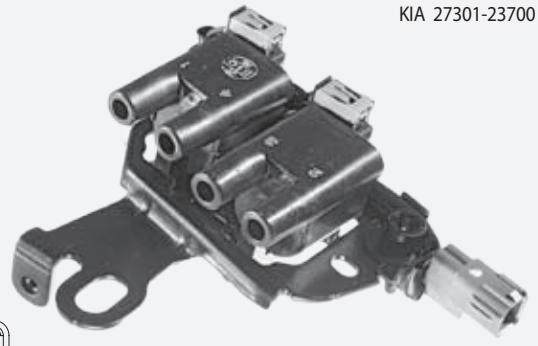

HYUNDAI				
Coupe (GK)	2.0	03.02-08.09	102	G4GC-G
Elantra (XD)	2.0	10.03-07.06	105	G4GC
Elantra Sedan (XD)	2.0	10.03-07.06	105	G4GC
Matrix (FC)	1.8	06.01-08.10	90	G4GB-G
Trajet (FO)	2.0	03.00-02.04	100	G4JP-G
	2.0	01.04-02.04	103	G4GC-G
Tucson (JM)	2.0	08.04-03.10	104	G4GC
	2.0 Allrad	08.04-03.10	104	G4GC
KIA				
Carens II (FJ)	2.0 CVVT	08.04-	102	G4GC
Cerato (LD)	2.0	04.04-	105	G4GC
Cerato Sedan (LD)	2.0	04.04-	105	G4GC
Sportage (JE_, KM_)	2.0 16V 4WD	09.04-	104	G4GC
	2.0 i 16V	09.04-	104	G4GC

CL566

OEM-No.
HYUNDAI 27301-2B000

1 coil per cylinder

HYUNDAI				
i30 (FD)	1.4	10.07-11.11	77	G4FA
	1.4	10.07-11.11	80	G4FA
	1.6	10.07-11.11	85	G4FC
	1.6	10.07-11.11	90	G4FC
KIA				
Cee'd CC (ED)	1.4	12.06-	77	G4FA
	1.4	12.06-	80	G4FA
	1.4 CVVT	06.10-	66	G4FA-L
	1.6	09.07-	85	G4FC
	1.6	12.06-	90	G4FC
	1.6	02.08-	93	G4FC
	1.6 CVVT	10.10-	92	G4FC
Cee'd SW (ED)	1.4	09.07-	80	G4FA
	1.4 CVVT	10.10-	66	G4FA-L
	1.6	09.07-	85	G4FC
	1.6	09.07-	90	G4FC
	1.6	09.07-	93	G4FC
	1.6 CVVT	06.09-	92	G4FC
Cerato (LD)	1.6	05.06-	90	G4FC
Cerato Sedan	1.6	05.06-	90	G4FC

CL568

OEM-No.
TOYOTA 90919-02163

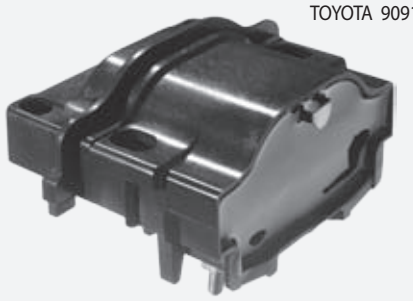

M4 M4

TOYOTA				
Camry	2.2	06.91-08.96	100	5S-FE
Camry Station Wagon	2.2	03.92-07.96	100	5S-FE
Carina E (T19)	2.0 GLI	04.92-09.97	98	3S-FE
	2.0 GTi	04.92-02.94	116	3S-GE
	2.0 GTi 16V	03.94-09.97	129	3S-GE
	2.0 i	12.93-09.97	93	3S-FE
Carina E Sedan	2.0	01.93-09.97	98	3S-FE
	2.0 GTi	04.92-02.94	116	3S-GE
	2.0 GTi 16V	03.94-09.97	129	3S-GE
	2.0 i	12.92-09.97	93	3S-FE
Carina E Sportswagon	2.0 GLI	01.93-09.97	98	3S-FE
	2.0 i	05.95-09.97	93	3S-FE
Hilux II Pick-up	2.4 i 4WD	06.89-07.05	84	22RE
RAV 4 I (SXA1_)	2.0 4WD	06.94-06.00	95	3S-FE
RAV 4 I Cabrio	2.0 16V 4WD	12.97-06.00	94	3S-FE

CL569

OEM-No.

HONDA 30500-P0AA01
30500-PCAA01
30500-PDAA01
30500-PCA-003
30500-PDA-E01

ROVER GCL207
NEC100750

4.8

HONDA				
Accord V	1.9 i	02.96-10.98	85	F18A3
	2.2 i VTEC	02.96-10.98	110	F22Z2
Accord VI	1.8 i	10.98-12.02	100	F18B2
	2.0 i	10.98-01.01	108	F20B6
	2.3	01.01-06.03	113	F23Z5/F23A1
Accord VI Coupe	2.0 i 16V	02.98-06.03	108	F20B7/F20B5
Accord VI Hatchback	1.8 i	12.99-12.02	100	F18B2
	2.0	12.99-12.02	108	F20B6
	2.3	11.00-12.02	113	F23Z5
Civic VI Aerodeck	1.5 16V	04.98-02.01	84	D15Z8
Civic VI Fastback	1.4 i	09.95-02.01	55	D14A5/_A7/_Z3
Civic VI Fastback	1.4 i	09.94-02.01	66	D14A8/_Z4/_A6/_A2
Shuttle (RA)	2.3 16V	10.97-06.04	110	F23A7
ROVER				
400 (RT)	416 Si	05.95-03.00	83	D 16 Y2
400 Hatchback (RT)	416 Si	06.95-03.00	83	D 16 Y2
400 Tourer (XW)	1.6 i	05.94-11.98	90	D 16 A8
600 (RH)	618 i/Si	03.96-02.99	85	F 18 A3

CL570

DIN

OEM-No.

SUBARU 22433-AA240
22433-AA370

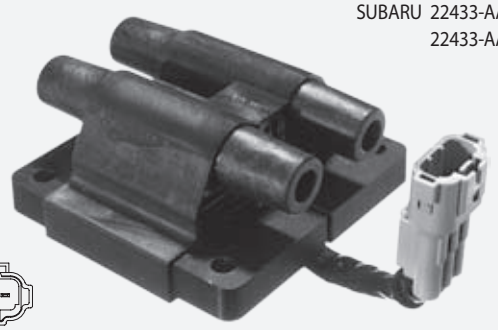

SUBARU				
Forester (SF)	2.0	06.98-09.02	92	EJ20
Impreza Coupe (GFC)	1.6	12.96-12.00	66	EJ16E
	2.0 AWD	12.95-06.97	85	EJ20
	2.0 Turbo AWD	12.96-06.98	155	EJ20G
	2.0 i	11.95-07.98	85	EJ20E
Impreza Sedan (GC)	1.6 i	08.92-12.00	66	EJ16
	1.6 i AWD	08.92-12.00	66	EJ16
	1.8 i AWD	08.92-12.00	76	EJ18/EJ18E
	2.0 Turbo GT AWD	03.94-06.98	155	EJ20 (Turbo)
	2.0 i AWD	10.95-06.97	85	EJ20
Impreza Stat. Wagon	1.6	01.93-08.98	66	EJ16E
	1.6 i	06.98-12.00	70	EJ161
	1.6 i AWD	08.92-12.00	66	EJ16
	1.8 i AWD	08.92-12.00	76	EJ18
	2.0	09.96-08.98	85	EJ20E
	2.0 i AWD	12.95-06.97	85	EJ20
	2.0 i Turbo AWD	03.94-06.98	155	EJ20 (Turbo)
Legacy I (BC)	2000 4WD	08.91-07.94	85	EJ20 EMPI
	2000 Turbo 4WD	05.92-07.94	147	EJ20-GN
	2200 4WD	01.89-07.94	100	EJ22 EMPI
Legacy I Stat. Wagon	2000	09.91-12.93	85	EJ20 EMPI
	2000 4WD	09.91-07.94	85	EJ20 EMPI

< CL570

SUBARU				
Legacy I Stat. Wagon	2000 Turbo 4WD	05.92-07.94	147	EJ20-GN
	2200 Super 4WD	01.89-07.94	100	EJ22 EMPI
Legacy II (BD, BG)	2.0 i	09.94-03.99	85	EJ20E
	2.0 i 4WD	09.94-03.99	85	EJ20
	2.2 i 4WD	09.94-03.99	94	EJ22 EMPI
	2.2 i 4WD	06.96-03.99	96	EJ22 EMPI
	2.5 i 4WD	06.96-03.99	110	EJ25D
Legacy II Stat. Wagon	2.0 i	09.94-11.98	85	EJ20 EMPI
	2.0 i 4WD	09.94-11.98	85	EJ20
	2.2 i 4WD	02.94-12.98	94	EJ22 EMPI
	2.2 i 4WD	06.96-11.98	96	EJ22 EMPI
	2.5 i 4WD	06.96-11.98	110	EJ25D

CL571

OEM-No.

TOYOTA 90080-19016
90919-02234

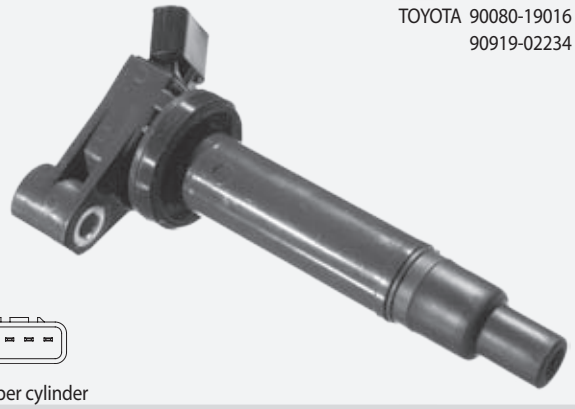

1 coil per cylinder

LEXUS				
RX (MCU15)	300 AWD	10.00-05.03	148	1MZ-FE
RX (_U3_)	300	05.03-12.08	150	1MZ-FE
TOYOTA				
Camry (_V2_)	3.0 24V	08.96-11.01	140	1MZ-FE
	3.0 V6	08.96-11.01	135	1MZ-FE
Camry (_V3_)	3.0 V6	11.01-11.06	137	1MZ-FE

CL572

DIN Ø5

OEM-No.

MAZDA FFY1-18-100
FP85-18-100C

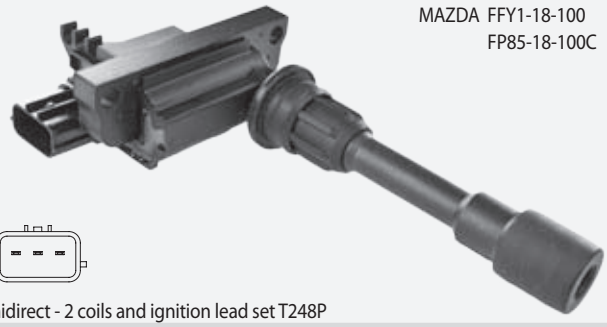

semidirect - 2 coils and ignition lead set T248P

MAZDA				
323 F VI (BJ)	1.9 16V	09.98-01.01	84	FP /FP55
	2.0	01.01-05.04	96	FS7G/FS7E
323 S VI (BJ)	1.9 16V	09.98-05.04	84	FP /FP55
	2.0	01.01-05.04	96	FS7G/FS7E
Premacy (CP)	1.9	07.99-03.05	74	FP
	1.9	07.99-03.05	84	FP
	2.0	11.01-03.05	96	FS7G/FS7E

CL573

DIN

OEM-No.
MAZDA B61P-18-10XC
B61P-18-10XD

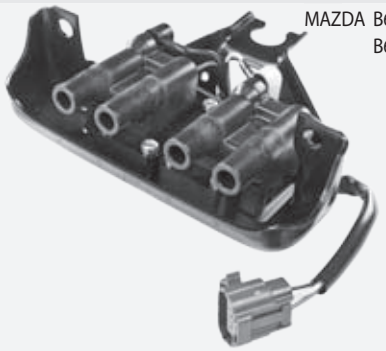

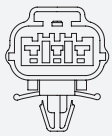

MAZDA				
MX-3 (EC)	1.6 i	01.94-	79	B6D
MX-5 I (NA)	1.6	01.95-04.98	66	8AN1
	1.6	05.90-01.94	85	B64F

CL574

DIN

OEM-No.
TOYOTA 90919-02185

LEXUS				
ES (F1, F2)	250	12.89-09.91	118	2VZ-FE
TOYOTA				
Land Cruiser 80	4.0	01.90-08.92	115	3F-E
MR 2 II (SW2_)	2.0 16V	12.89-12.91	115	3S-GE
	2.0 16V	12.89-12.91	125	3S-GE
	2.0 16V	12.89-12.91	129	3S-GE

CL575

OEM-No.
TOYOTA 90919-02230
90080-19027

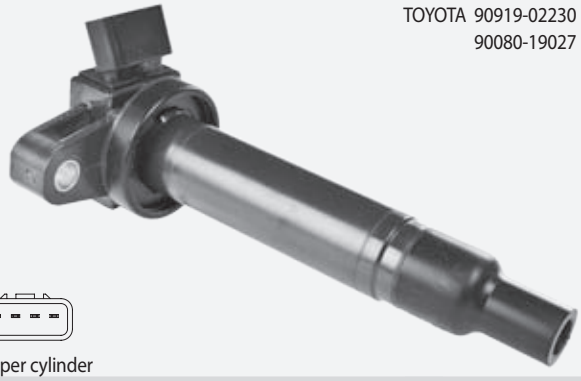

1 coil per cylinder

LEXUS				
GS (UZS161, JZS160)	430	11.00-03.05	208	3UZ-FE
IS I (JCE1_, GXE1_)	200	04.99-07.05	114	1G-FE
IS SportCross	200	10.02-10.05	114	1G-FE
LS (UCF30)	430	10.00-08.06	207	3UZ-FE
SC (UZZ40_)	430	05.01-07.10	210	3UZ-FE
TOYOTA				
Land Cruiser	4.7 V8	01.08-	212	2UZ-FE
Land Cruiser 100	4.7	01.98-	173	2UZ-FE
	4.7	02.02-	175	2UZ-FE

CL576

OEM-No.
TOYOTA 90919-02237

1 coil per cylinder

TOYOTA				
Hiace IV Bus (LH1_)	2.7	09.01-11.01	105	3RZ-FE
	2.7	11.01-08.06	106	3RZ-FE
	2.7 4WD	09.01-08.06	105	3RZ-FE
Hiace IV Van	2.7	09.01-08.06	105	3RZ-FE
	2.7 4WD	09.01-	106	3RZ-FE
Land Cruiser	2.7	09.02-08.04	112	3RZ-FE

CL577

OEM-No.
TOYOTA 90919-02238

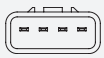

1 coil per cylinder

TOYOTA				
Celica (ZZT23_)	1.8 16V TS	08.99-09.05	141	2ZZ-GE
Corolla (E12)	1.8 VVTL-i TS	01.02-02.07	141	2ZZ-GE
	1.8 VVTL-i TS	10.05-12.06	160	2ZZ-GE
	1.8 VVTL-i TS	02.05-02.07	165	2ZZ-GE

CL578

DIN Ø5

OEM-No.
TOYOTA 19500-74040
19500-74050
90919-02197
90919-02208
VAG J9091902197

LEXUS				
LS (UCF10)	400	12.89-12.94	180	1UZ-FE
LS (UCF20)	400	12.94-08.97	194	1UZ-FE
	400	09.98-10.00	203	1UZ-FE
	400	09.97-10.00	209	1UZ-FE
TOYOTA				
4 Runner	3.0 V6	08.91-11.95	105	3VZ-E
Camry	3.0	06.91-08.96	138	3VZ-FE
Camry Station Wagon	3.0	03.92-07.96	138	3VZ-FE
Celica (ST20, AT20)	2.0 i 16V	04.96-11.99	125	3S-GE
	2.0 i 16V	11.93-11.99	129	3S-GE
Celica Cabriolet (T18)	2.0 GTi	10.89-11.93	115	3S-GE
Celica Cabriolet (T20)	2.0 i 16V	11.93-08.99	125	3S-GE

CL578 ▶

< CL578

TOYOTA				
Celica Coupe (T18)	2.0 GTi	09.91-11.93	115	3S-GE
	2.0 Turbo 4WD	10.89-11.93	150	3S-GTE
	2.0 Turbo 4WD	10.89-11.93	153	3S-GTE
Liteace Bus (M30)	1.5	10.85-08.89	51	5K
	1.5	07.89-01.92	52	5K
Liteace Bus (R2_LG)	1.5	01.92-01.95	52	5K
Liteace Van (_M3_V)	1.5	05.86-09.91	51	5K
Liteace Van (_R2__V)	1.5	01.92-01.95	52	5K
MR 2 II (SW2_)	2.0 16V	12.91-05.00	115	3S-GE
	2.0 16V	12.91-05.00	125	3S-GE
	2.0 16V	12.91-05.00	129	3S-GE
VW				
Taro	2.4 i 4x4	06.89-03.97	84	22R

CL579

OEM-No.
TOYOTA 90919-02243
90919-02244
90080-19023

1 coil per cylinder

TOYOTA				
Avensis Verso	2.0 VVT-i	08.01-11.09	110	1AZ-FE
Camry (_V3_)	2.4 VVT-i	11.01-11.06	112	2AZ-FE
Camry Sedan (XV4)	2.4 VVTi	01.06-09.11	116	2AZ-FE
	2.4 VVTi Hybrid	01.06-09.11	105	2AZ-FXE
Previa	2.4	08.00-01.06	115	2AZ-FE
RAV 4 II	2.0 VVTi 4WD	06.00-11.05	110	1AZ-FE
RAV 4 III	2.0 VVT-i 4WD	03.06-	112	1AZ-FE

CL580

PIN

OEM-No.
TOYOTA 90919-02212

semidirect - 3 coils and ignition lead set T587P

TOYOTA				
4 Runner	3.4 i	11.95-03.96	136	5VZ-FE
Land Cruiser 90	3.4 i 24V	04.96-	131	5VZ-FE

CL581

OEM-No.
TOYOTA 90919-02252

1 coil per cylinder

TOYOTA				
Auris (_E15_)	1.6	05.09-	97	1ZR-FAE
	1.6 VVTi	03.07-	91	1ZR-FE
	1.8	02.09-	108	2ZR-FAE
Auris Touring Sports	1.6	07.13-	97	1ZR-FAE
Avensis Sedan	1.6	11.08-	97	1ZR-FAE
	1.8	11.08-	108	2ZR-FAE
	2.0	11.08-	112	3ZR-FAE/3ZR-FE
Avensis Stat. Wagon	1.6	02.09-	97	1ZR-FAE
	1.8	02.09-	108	2ZR-FAE
	2.0	02.09-	112	3ZR-FAE/3ZR-FE
Corolla Sedan (E18)	1.6	06.13-	97	1ZR-FAE
	1.6 BiFuel	06.13-	90	1ZR-FE
RAV 4 III	2.0	12.08-	116	3ZR-FAE
	2.0 4WD	12.08-	116	3ZR-FAE
Verso	1.6	04.09-	97	1ZR-FAE
	1.8	04.09-	108	2ZR-FAE
Yaris (_P9_)	1.8 VVTi	01.07-	98	2ZR-FE

CL582

DIN Ø5

OEM-No.
MITSUBISHI MD363552

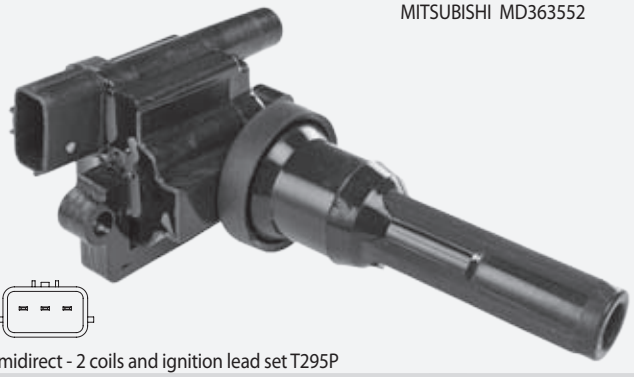

semidirect - 2 coils and ignition lead set T295P

MITSUBISHI				
Lancer VI (CJ-CP_)	2.0 16V EVO	08.98-08.01	206	4G63 Turbo
Lancer Sedan	2.0 16V EVO VIII	03.04-	195	4G63 Turbo
	2.0 16V EVO IX	01.06-	206	4G63 Turbo
Outlander I (CU_W)	2.0	05.03-10.06	100	4G63 (DOHC 16V)
	2.0 4WD	05.03-10.06	93	4G63 (DOHC 16V)
	2.0 4WD	05.03-10.06	100	4G63 (DOHC 16V)
	2.0 4WD	01.02-10.06	177	4G63 Turbo
	2.0 Turbo 4WD	04.04-10.06	148	4G63T (DOHC 16V)

CL583

OEM-No.
HONDA 30520-PGK-A01
30520-PVF-A01

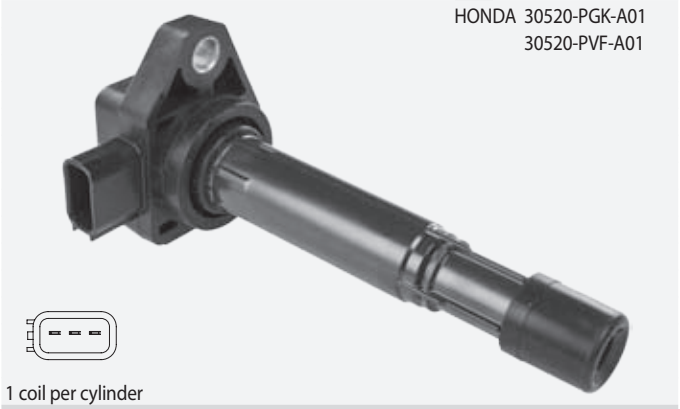

1 coil per cylinder

HONDA				
Civic VII Coupe (EM2)	1.6 i	02.01-12.05	81	D16V1
Civic VII Hatchback	1.4 i	02.01-09.05	55	D14Z6
	1.4 iS	02.01-09.05	66	D14Z5/D14Z6
	1.6 i	02.01-09.05	81	D16V1
Civic VII Sedan (ES)	1.4	12.00-09.05	66	D14Z5
	1.6	02.01-09.05	81	D16V1

CL584

OEM-No.
HYUNDAI 27301-2B010
KIA 27301-2B010

1 coil per cylinder

HYUNDAI				
Accent IV (RB)	1.4	11.10-	79	G4FA
	1.6	11.10-	90	G4FC
Accent IV Sedan (RB)	1.4	11.10-	80	G4FA
	1.4	11.10-	74	G4LC
	1.6	11.10-	90	G4FC
	1.6	11.10-	91	G4FC
Elantra Sedan (MD)	1.6	06.11-	97	G4FG
i20 (PB, PBT)	1.4	09.08-	74	G4FA
	1.6	09.08-	93	G4FC
i30 (FD)	1.6	10.07-11.11	85	G4FC
	1.6	02.08-11.11	93	G4FC
i30 (GD)	1.4	12.11-	73	G4FA
i30 Coupe	1.4	05.13-	73	G4FA
i30 CW (FD)	1.6	02.08-06.12	85	G4FC
	1.6	02.08-06.12	90	G4FC
	1.6	02.08-06.12	93	G4FC
i30 CW (GD)	1.6	06.12-	95	G4FG
ix20 (JC)	1.4	11.10-	66	G4FA
Veloster (FS)	1.6 MPI	04.11-	97	G4FG
KIA				
Carens III (UN)	1.6 CVVT	10.10-	93	G4FC
	1.6 CVVT	08.09-	97	G4FC
Cee'd	1.4 CVVT	05.12-	66	G4FA-L
Cee'd Sportswagon	1.4 CVVT	09.12-	73	G4FA
Cee'd SW (ED)	1.4	10.10-	77	G4FA
Cerato II Sedan (TD)	1.6	01.10-	93	G4FC
Pro Cee'd (ED)	1.4	02.08-	77	G4FA
	1.4 CVVT	06.10-	66	G4FA-L
	1.6	02.08-	90	G4FC
	1.6	02.08-	93	G4FC
	1.6 CVVT	10.10-	92	G4FC
Pro Cee'd	1.4 CVVT	03.13-	73	G4FA

< CL584

KIA				
Rio III (UB)	1.4 CVVT	09.11-	80	G4FA
	1.4 CVVT	09.11-	79	G4FA
	1.6 CVVT	06.12-	90	G4FC
Rio III Sedan	1.4 CVVT	10.11-	80	G4FA
	1.6 CVVT	06.12-	90	G4FC
Soul (AM)	1.6 CVVT	02.09-	77	G4FC
	1.6 CVVT	02.09-	93	G4FC
	1.6 CVVT	03.12-	95	G4FC
Venga (YN)	1.4 CVVT	02.10-	66	G4FA-L
	1.6 CVVT	02.10-	92	G4FC

CL585

OEM-No.
HONDA 30520-PWA-003

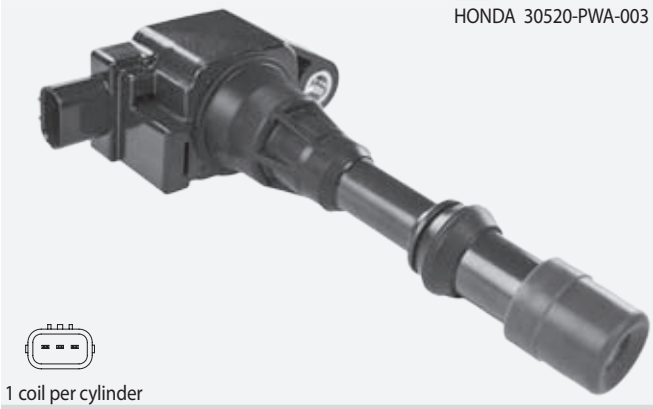

1 coil per cylinder

HONDA				
Civic VII Sedan (ES)	1.3 IMA	01.04-09.05	61	LDA1
Civic VIII Hatchback	1.4	09.05-	61	L13A7
	1.4	10.08-	73	L13Z1
Civic VIII Sedan	1.3 Hybrid	01.06-	70	LDA2
Jazz II (GD)	1.2	03.02-07.08	57	L12A1
	1.3	03.02-07.08	61	L13A1
Jazz III (GE)	1.2	07.08-	66	L12B1
	1.3 i	07.08-	73	L13Z1

CL586

OEM-No.
HONDA 30521-PWA-003

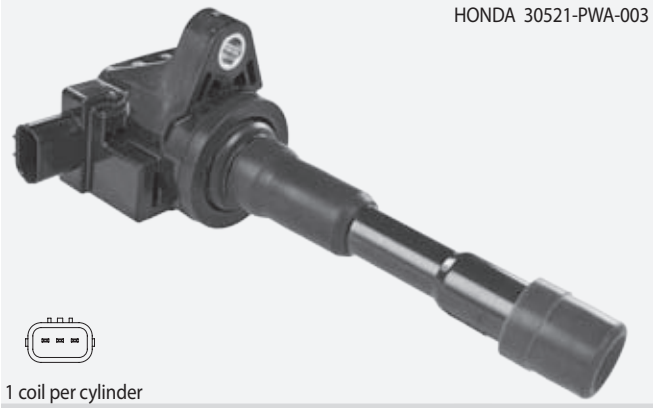

1 coil per cylinder

HONDA				
Civic VII Sedan (ES)	1.3 IMA	01.04-09.05	61	LDA1
Civic VIII Hatchback	1.4	09.05-	61	L13A7
	1.4	10.08-	73	L13Z1
Civic VIII Sedan	1.3 Hybrid	01.06-	70	LDA2
Jazz II (GD)	1.2	03.02-07.08	57	L12A1
	1.3	03.02-07.08	61	L13A1
Jazz III (GE)	1.2	07.08-	66	L12B1
	1.3 i	07.08-	73	L13Z1

CL587

OEM-No.
DAIHATSU 19070-B1020

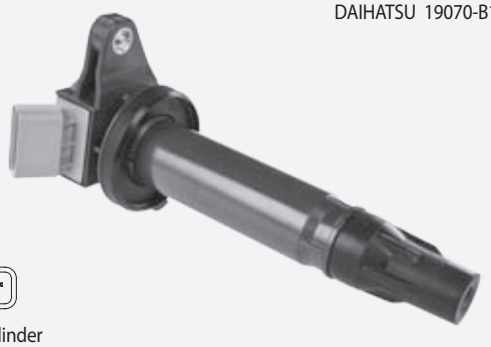

1 coil per cylinder

DAIHATSU				
Copen	1.3	03.06-	64	K3-VE
Extol Bus (S22, S23)	1.3	07.00-	63	K3-VE
Materia (M4_)	1.3	10.06-	67	K3-VE
	1.5	10.06-	76	3SZ-VE
	1.5 Eco 4WD	10.06-	76	3SZ-VE
Sirion (M1)	1.3 Sport	08.00-01.05	75	K3-VE2
	1.3 Sport 4WD	08.00-03.05	75	K3-VE2
Sirion (M3_)	1.3	01.05-	64	K3-VE
	1.3	03.08-	67	K3-VE
	1.3 4WD	04.05-	64	K3-VE
	1.3 4WD	03.08-	67	K3-VE
	1.5	03.08-	76	3SZ-VE
Terios (J1)	1.3	09.01-10.05	63	K3-VE
	1.3 4WD	10.00-10.05	63	K3-VE
Terios (J2_)	1.5 4x4	05.06-	77	3SZ-VE
	1.5 VVT-i	11.05-	77	3SZ-VE
YRV (M2)	1.3	02.01-	64	K3-VE
	1.3 4WD	02.01-	64	K3-VE
	1.3 GTi	07.02-	95	K3-VET

CL588

DIN

OEM-No.
SUZUKI 33410-57B10
33410-57B10-000
33410-80C10

SUZUKI				
Samurai (SJ)	1.3 (SJ 413)	11.88-12.04	47	G13A
	1.3 Allrad	01.00-12.04	59	G13BA
	1.3 Allrad (SJ 413)	11.88-12.04	44	G13A
	1.3 Allrad (SJ 413)	11.88-12.04	51	G13BA
Vitara (ET, TA)	1.6 i 16V Allrad (ET, TA02)	07.90-03.98	71	G16B
Vitara Cabrio (ET, TA)	1.6 i 16V	07.90-03.99	71	G16B

CL589

PIN

OEM-No.
KIA 0K2A318100A

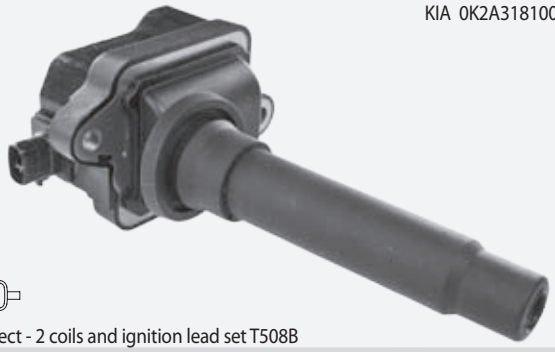

semidirect - 2 coils and ignition lead set T508B

KIA				
Sephia (FA)	1.5 i	02.96-10.97	59	B5

< CL589

KIA				
Sephia Sedan	1.5 i	02.96-10.97	59	B5
Shuma (FB)	1.5 i 16V	10.97-03.01	65	
Shuma Sedan	1.5	03.96-12.98	59	OK280
	1.5 i 16V	10.97-10.01	65	

CL590

OEM-No.
HYUNDAI 27301-3E100

1 coil per cylinder

HYUNDAI				
Santa Fé II (CM)	2.7	01.07-	125	G6BA
	2.7 4x4	01.07-	125	G6BA
	2.7 V6 GLS	01.07-	139	G6EA
	2.7 V6 GLS 4x4	01.07-	139	G6EA
KIA				
Grand / Carnival III	2.7 V6	06.06-	139	G6EA
Magentis (MG)	2.7	11.05-	138	G6EA

CL591

SAE

OEM-No.
SUBARU 22433-AA41A
22433-AA41B
22433-AA57A
22433-AA410
22433-AA570

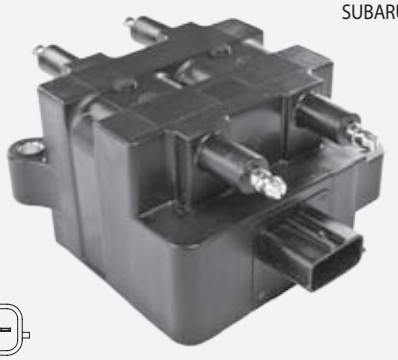

SUBARU				
Forester (SG)	2.0	09.02-	92	EJ20
	2.0 X	09.05-	116	EJ204
	2.5	12.03-	155	EJ25
Impreza Coupe (GFC)	2.0 AWD	12.97-12.00	85	EJ20
	2.2 AWD	09.98-09.00	96	EJ22E
	2.2 i	09.98-09.00	96	EJ22E
Impreza Sedan (GC)	2.0 i	09.98-09.00	92	EJ201
	2.0 i AWD	12.97-12.00	85	EJ20
	2.0 i AWD	06.98-12.00	92	EJ20
	2.2 GX AWD	09.98-09.00	96	EJ22E
	2.2 GX AWD	11.95-08.98	97	EJ22
Impreza Sedan (GD)	2.0 i AWD	12.00-	92	EJ20
Impreza St. Wag. (GF)	2.0 i	09.98-09.00	92	EJ201
	2.0 i AWD	12.97-12.00	85	EJ20
	2.0 i 16V AWD	06.98-12.00	92	EJ20/EJ20E
	2.2 GX AWD	09.98-09.00	96	EJ22E
	2.2 GX AWD	11.95-08.98	97	EJ22
Impreza St. Wag. (GG)	2.0 AWD	12.00-	92	EJ20
Legacy III (BE, BH)	2.0	04.99-08.03	92	EJ20
	2.5	10.98-08.03	115	EJ25
Legacy III St. Wagon	2.0 AWD	12.98-08.03	92	EJ20
	2.5 AWD	12.98-08.03	115	EJ25
Outback (BE, BH)	2.5	10.00-08.03	115	EJ25
Outback (BL, BP)	2.5	11.03-09.09	121	EJ25D
	2.5	09.08-09.09	127	EJ251

CL592

OEM-No.
NISSAN 22448-8H300
22448-8H310
22448-8H311
22448-8H314
22448-8H315

1 coil per cylinder

NISSAN				
Primera (P12)	2.0	03.02-	103	QR20DE
Primera Combi	2.0	03.02-	103	QR20DE
Primera Hatchback	2.0	07.02-	103	QR20DE
Teana I (J31)	2.0	10.03-06.08	103	QR20DE
X-Trail (T30)	2.0	07.01-	103	QR20DE
	2.0 4x4	07.01-	103	QR20DE
	2.5 4x4	09.02-	121	QR25DE
X-Trail (T31)	2.5 4x4	09.07-	124	QR25DE

CL593

OEM-No.
HYUNDAI 27301-3C000
KIA 27301-3C000

1 coil per cylinder

HYUNDAI				
Genesis (BH)	3.8 V6	01.08-	213	G6DA
Genesis Coupe	3.8 V6	01.08-	223	G6DA
Grandeur (TG)	3.3	04.05-	173	G6DB
	3.8	06.05-	195	G6DA
Santa Fé II (CM)	2.4	11.10-	128	G4KE
	2.4 4x4	07.10-	128	G4KE
Sonata V (NF)	2.4	01.05-	119	G4KC
	3.3	01.05-	171	G6DB
	3.3	06.05-	173	G6DB
	3.3	01.08-	184	G6DB
KIA				
Carens III (UN)	2.0 CVVT	09.06-	106	G4KA
Opirus (GH)	3.8 V6	10.06-	196	G6DA
Sorento I (JC)	3.3 V6	12.06-	177	
	3.3 V6 4WD	11.07-	182	G6DB
Sorento II (XM)	2.4 CVVT	11.09-	128	G4KE
	2.4 CVVT 4WD	11.09-	128	G4KE

CL594

DIN Ø5

OEM-No.
MAZDA ZL01-18-100
ZL01-18-100A
ZL01-18-100B

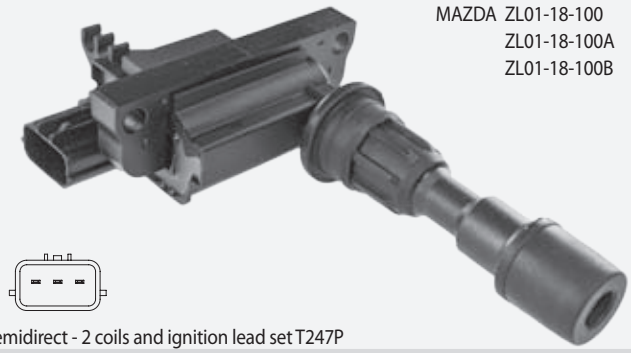

semidirect - 2 coils and ignition lead set T247P

MAZDA				
323 F VI (BJ)	1.5 16V	09.98-01.01	65	ZL06/ZL05
	1.6	01.01-05.04	70	ZM
	1.6	01.01-05.04	72	ZM
323 S VI (BJ)	1.5 16V	09.98-01.01	65	ZL06/ZL05
	1.6	01.01-05.04	70	ZM
	1.6	01.01-05.04	72	ZM

CL595

OEM-No.
HYUNDAI 27301-26640
KIA 27301-26640

1 coil per cylinder

HYUNDAI				
Accent II (LC)	1.6	12.02-11.05	77	G4ED-G
Accent II Sedan	1.6	12.02-11.05	77	G4ED-G
Accent III (MC)	1.4 GL	11.05-11.10	71	G4EE
	1.6 GLS	11.05-11.10	82	G4ED
Accent III Sedan	1.4 GL	11.05-11.10	71	G4EE
	1.6 GLS	11.05-11.10	82	G4ED
KIA				
Rio II (JB)	1.4 16V	03.05-	71	G4EE
	1.6 CVVT	03.05-	82	G4ED
Rio II Sedan	1.4 16V	03.05-	71	G4EE
	1.6 16V	03.05-	82	G4ED

CL596

OEM-No.
HONDA 30520-RNA-A01

1 coil per cylinder

HONDA				
Accord VIII (CU)	2.0 i	07.08-06.15	115	R20A3
Accord VIII Combi	2.0 i	07.08-	115	R20A3
Civic VII Sedan (ES)	1.8	02.01-09.05	103	R18A1
Civic VIII Hatchback	1.8	09.05-	103	R18A2
Civic VIII Sedan	1.8	09.05-02.12	103	R18A1

CL596 ▶

< CL596

HONDA				
Civic VIII Sedan	1.8	02.06-	103	R18A2
FR-V (BE)	1.8	01.07-	103	R18A1
Stream	1.8 Vtec	10.05-	103	R18A2

CL597

OEM-No.
MITSUBISHI MN195616

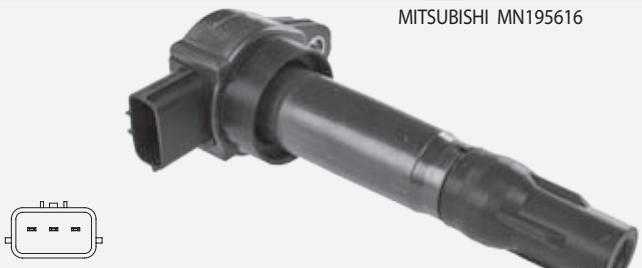

1 coil per cylinder

MITSUBISHI				
Colt VI (Z3_A, Z2_A)	1.1	10.04-06.12	55	3A91
	1.3	06.04-06.12	70	4A90
	1.5	06.04-06.12	80	4A91
Colt CZC Cabriolet	1.5	05.06-07.09	80	4A91
SMART				
Forfour (454)	1.1	02.05-06.06	47	M 134.911
	1.1	01.04-06.06	55	M 134.910
	1.3	01.04-06.06	70	M 135.930
	1.5	01.04-06.06	80	M 135.950

CL598

DIN Ø5

OEM-No.
MITSUBISHI MD314583

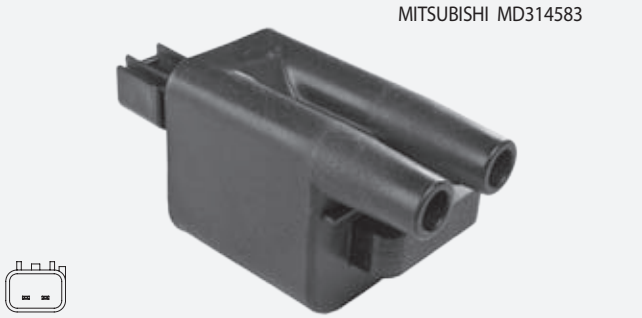

2 coils per vehicle (with coil CL928-1 pc)

MITSUBISHI				
Pajero II	3.0 V6 24V	06.97-10.99	130	6G72 (SOHC 24V)
	3.0 V6 24V	06.94-05.97	133	6G72 (SOHC 24V)
	3.5 V6 24V	07.97-10.99	143	6G74 (SOHC 24V)
	3.5 V6 24V	06.97-10.99	153	6G74 (SOHC 24V)
Pajero II Canvas Top	3.0 V6 24V	06.94-04.00	133	6G72 (SOHC 24V)
Pajero Sport (K90)	3.0 V6	11.98-	130	6G72 (SOHC 24V)
	3.0 V6	06.00-	125	6G72 (SOHC 24V)

CL599

OEM-No.
MAZDA L3G2-18-100A
L3G2-18-100A9U
L3G2-18-100B
L3G2-18-100B9U

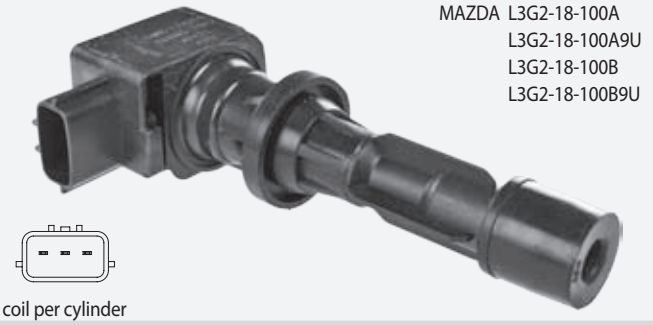

1 coil per cylinder

MAZDA				
3 (BK)	2.0	03.06-06.09	110	LF17
	2.3 MPS Turbo	12.06-06.09	191	L3-VDT/L3N9
3 (BL)	2.0 MZR	06.09-	110	LF17/LF-DE
	2.0 MZR DISI	06.09-	111	LF5W/LF5H

< CL599

MAZDA				
3 Sedan (BK)	2.0	03.06-	110	LF17
3 Sedan (BL)	2.0 MZR	06.09-	110	LF17/LF-DE
	2.0 MZR DISI	06.09-	111	LF5W/LF5H
6 (GH)	2.0 MZR	08.07-	108	LF17
	2.0 MZR	01.10-	114	LF-DE
	2.5 MZR	08.07-	125	L5-VE
6 CC (GH)	2.0 MZR	08.07-	108	LF17
	2.0 MZR	01.10-	114	LF-DE
	2.5 MZR	08.07-	125	L5-VE
6 Combi (GH)	2.0 MZR	02.08-	108	LF17
	2.0 MZR	01.10-	114	LF-DE
	2.5 MZR	02.08-	125	L5-VE
6 Station Wagon (GY)	2.0	03.05-08.07	108	LFF7
CX-7 (ER)	2.3 MZR DISI Turbo	11.06-	175	L3Y7
	2.3 MZR DISI Turbo	10.07-	190	L3-VDT
	2.3 MZR DISI Turbo	09.09-	191	L3-VDT
MX-5 III (NC)	2.0	09.08-	118	LF62/LF-DE

CL600

OEM-No.
BMW 12131703227
12131703228
12131703825
12131748017
12131748018
LANDROVER NEC000040
ROVER GCL 307
NEC101000L

1 coil per cylinder

BMW				
3 (E36)	323 i 2.5	03.95-02.98	125	M52 B25 (256S3)
	328 i	01.95-02.98	142	M52 B28 (286S1)
	M3 3.2	09.95-02.98	236	S50 B32 (326S1)
3 (E46)	320 i	03.98-09.00	110	M52 B20 (206S4)
	320 i	06.00-09.02	125	M54 B22 (226S1)
	323 i	03.98-09.00	125	M52 B25 (256S4)
	325 i	06.00-09.02	141	M54 B25 (256S5)
	325 xi	06.00-09.02	141	M54 B25 (256S5)
	328 i	02.98-06.00	142	M52 B28 (286S2)
	330 i	06.00-09.02	170	M54 B30 (306S3)
	330 xi	06.00-09.02	170	M54 B30 (306S3)
3 Cabriolet (E36)	323 i	06.95-04.99	125	M52 B25 (256S3)
	328 i	03.95-04.99	142	M52 B28 (286S1)
	M3 3.2	10.95-04.99	236	S50 B32 (326S1)
3 Cabriolet (E46)	320 Ci	09.00-09.02	125	M54 B22 (226S1)
	323 Ci	04.00-09.00	125	M52 B25 (256S4)
	325 Ci	09.00-09.02	141	M54 B25 (256S5)
	330 Ci	06.00-09.02	170	M54 B30 (306S3)
3 Compact (E36)	323 ti	08.97-08.00	125	M52 B25 (256S3)
3 Compact (E46)	325 ti	06.01-09.02	141	M54 B25 (256S5)
3 Coupe (E36)	320 i	03.92-04.99	110	M52 B20/M50 B20
	323 i	03.95-04.99	125	M52 B25 (256S3)
	328 i	01.95-04.99	142	M52 B28 (286S1)
	M3 3.2	10.95-04.99	236	S50 B32 (326S1)
3 Coupe (E46)	320 Ci	08.99-09.00	110	M52 B20 (206S4)
	320 Ci	06.00-09.02	125	M54 B22 (226S1)
	323 Ci	04.99-09.00	125	M52 B25 (256S4)
	325 Ci	06.00-09.02	141	M54 B25 (256S5)
	328 Ci	04.99-06.00	142	M52 B28 (286S2)
	330 Ci	06.00-09.02	170	M54 B30 (306S3)
	330 xi	06.00-09.02	170	M54 B30 (306S3)
3 Touring (E36)	320 i	01.95-10.99	110	M52 B20 (206S3)
	323 i	09.95-10.99	125	M52 B25 (256S3)
	328 i	01.95-10.99	142	M52 B28 (286S1)

< CL600

BMW				
3 Touring (E46)	320 i	10.99-09.00	110	M52 B20 (206S4)
	320 i	06.00-09.02	125	M54 B22 (226S1)
	325 i	06.00-09.02	141	M54 B25 (256S5)
	325 xi	06.00-09.02	141	M54 B25 (256S5)
	328 i	10.99-06.00	142	M52 B28 (286S2)
	330 i	06.00-09.02	170	M54 B30 (306S3)
	330 xi	06.00-09.02	170	M54 B30 (306S3)
5 (E39)	520 i	04.99-06.03	100	M52 B20 (206S3)
	520 i	01.96-09.00	110	M52 B20 (206S3)
	520 i	09.00-09.02	125	M54 B22 (226S1)
	523 i	11.95-09.00	125	M52 B25 (256S3)
	525 i	09.00-09.02	141	M54 B25 (256S5)
	528 i	11.95-09.00	142	M52 B28
	530 i	09.00-09.02	170	M54 B30 (306S3)
	535 i	04.96-03.99	173	M62 B35
	535 i	04.99-06.03	180	M62 B35 (358S2)
	540 i	04.96-06.03	210	M62 B44
	M 4.9	10.98-06.03	294	S62 B50 (508S1)
5 Touring (E39)	520 i	01.97-09.00	110	M52 B20 (206S3)
	520 i	04.99-05.04	100	M52 B20 (206S3)
	520 i	09.00-09.02	125	M54 B22 (226S1)
	523 i	01.97-09.00	125	M52 B25 (256S3)
	525 i	09.00-09.02	141	M54 B25 (256S5)
	528 i	01.97-09.00	142	M52 B28
	530 i	09.00-09.02	170	M54 B30 (306S3)
	540 i	01.97-05.04	210	M62 B44
7 (E38)	728 i,iL	08.95-11.01	142	M52 B28
	735 i,iL	01.96-11.01	173	M62 B35 (358S1)
	740 i,iL	01.96-11.01	210	M62 B44
	750 i,iL	12.94-11.01	240	M73 B54
8 (E31)	840 Ci	01.96-12.99	210	M62 B44 (448S1)
	850 Ci	09.94-12.99	240	M73 B54 (54121)
X5 (E53)	3.0 i	05.00-10.02	163	M54 B30 (306S3)
	3.0 i	05.00-12.06	170	M54 B30 (306S3)
	4.4 i	05.00-12.03	210	M62 B44 (448S2)
	4.6 is	02.02-12.03	255	M62 B46 (468S1)
Z3 (E36)	2.0	04.99-01.03	110	M52 B20 (206S4)
	2.2	08.00-01.03	125	M54 B22 (226S1)
	2.8	04.97-06.00	141	M52 B28 (286S1)
	3.0	06.00-01.03	170	M54 B30 (306S3)
	M 3.2	03.97-06.01	236	S50 B32 (326S1)
Z3 Coupe (E36)	2.8	07.97-06.00	141	M52 B28 (286S1)
	3.0	06.00-06.03	170	M54 B30 (306S3)
	M 3.2	02.98-06.01	236	S50 B32 (326S1)
Z8 (E52)	4.9	06.00-06.03	294	S62 B50 (508S1)
LANDROVER				
Range Rover III (LM)	4.4 4x4	03.02-08.12	210	M62 B44
ROVER				
45 (RT)	2.0 V6	02.00-05.05	110	20 K4F
45 Sedan (RT)	2.0 V6	02.00-05.05	110	20 K4F
75 (RJ)	2.0 V6	02.99-03.03	110	20 K4F
	2.5 V6	02.99-03.99	129	KV 6
	2.5 V6	10.01-03.03	130	25 K4F
75 Tourer (RJ)	2.5 V6	08.01-03.03	130	KV 6

CL601

OEM-No.
BMW 12131402440
12131703359
12131727108
12131734468
12131748395
12139066468

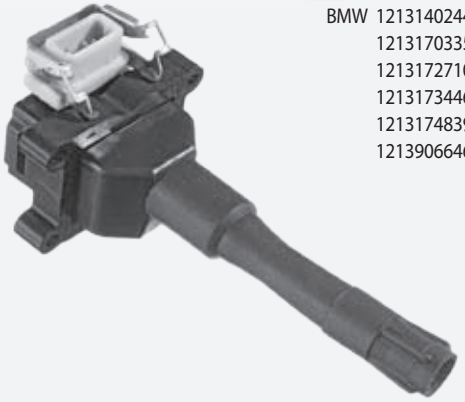

1 coil per cylinder

BMW				
3 (E30)	318 is	09.89-08.91	100	M42 B18 (184S1)
3 (E36)	318 is	03.93-09.93	103	M42 B18 (184S1)
	320 i	09.90-02.98	110	M52 B20/M50 B20
	325 i	09.90-09.95	141	M50 B25
	M3 3.0	08.94-09.95	210	S50 B30 (306S1)
3 Cabriolet (E36)	320 i	12.93-04.99	110	M52 B20
	325 i	03.93-03.95	141	M50 B25 (256S2)
	M3 3.0	01.94-10.95	210	S50 B30 (306S1)
3 Coupe (E36)	325 i	03.92-04.99	141	M50 B25
	M3 3.0	10.92-01.95	210	S50 B30 (306S1)
	M3 3.0	01.95-10.95	217	S50 B30 (306S1)
5 (E34)	520 i 24V	09.89-09.95	110	M50 B20
	525 i 24V	09.89-09.95	141	M50 B25 (256S2)
	525 iX 24V	10.91-09.95	141	M50 B25
	530 i V8	09.92-09.95	160	M60 B30 (308S1)
	540 i V8	09.92-09.95	210	M60 B40 (408S1)
5 Touring (E34)	520 i	11.91-01.97	110	M50 B20
	525 i	11.91-01.97	141	M50 B25
	525 ix	02.92-01.97	141	M50 B25
	530 i V8	09.92-01.97	160	M60 B30 (308S1)
	540 i	09.93-01.97	210	M60 B40 (408S1)
7 (E32)	730 i,iL V8	04.92-09.94	160	M60 B30 (308S1)
	740 i,iL V8	04.92-09.94	210	M60 B40 (408S1)
7 (E38)	730 i,iL	10.94-11.01	155	M60 B30 (308S1)
	730 i,iL	10.94-11.01	160	M60 B30 (308S1)
	740 i,iL	10.94-11.01	210	M60 B40 (408S1)
8 (E31)	840 i	02.93-02.96	210	M60 B40 (408S1)

CL602

OEM-No.
BMW 1712223
7551260
12137551260
12131712219
12131712223

1 coil per cylinder

BMW				
1 (E81)	116 i	03.07-09.12	85	N45 B16/N43 B16
	120 i	09.06-09.12	115	N46 B20 B/_B20 C
3 (E46)	316 i	02.02-02.05	85	N46 B18A/N42 B18A
	316 i	06.02-02.05	85	N45 B16A/N40 B16A
	318 i	09.01-02.05	105	N46 B20A/N42 B20A
	320 i	10.02-02.05	125	M54 B22 (226S1)
	325 i	10.02-02.05	141	M54 B25 (256S5)
	325 xi	10.02-02.05	141	M54 B25 (256S5)
	330 i	10.02-02.05	170	M54 B30 (306S3)
	330 xi	10.02-02.05	170	M54 B30 (306S3)
3 (E90)	316 i	02.06-12.11	85	N45 B16 A

CL602 ▶

< CL602

BMW

3 (E90)	318 i	05.06-03.07	95	N46 B20 B
	320 i	01.05-03.07	110	N46 B20 B/_A/_C
	320 si	05.06-12.11	127	N45 B20 A
3 Cabriolet (E46)	318 Ci	09.01-	105	N46 B20A/N42 B20A
	318 Ci	02.05-	110	N46 B20B/N46 B20A
	320 Ci	10.02-	125	M54 B22 (226S1)
	325 Ci	10.02-	141	M54 B25 (256S5)
	330 Ci	10.02-	170	M54 B30 (306S3)
	M3 3.2	04.01-	252	S54 B32 (326S4)
3 Compact (E46)	316 ti	06.01-02.05	85	N46 B18A/N42 B18A
	316 ti	06.02-02.05	85	N45 B16A/N40 B16A
	318 ti	09.01-02.05	105	N46 B20A/N42 B20A
	325 ti	10.02-12.04	141	M54 B25 (256S5)
3 Coupe (E46)	316 Ci	06.02-07.06	85	N45 B16 A
	318 Ci	09.01-07.06	105	N46 B20A/N42 B20A
	318 Ci	03.05-07.06	110	N46 B20 A
	320 Ci	10.02-07.06	125	M54 B22 (226S1)
	325 Ci	10.02-07.06	141	M54 B25 (256S5)
	330 Ci	09.02-07.06	170	M54 B30 (306S3)
	330 xi	10.02-07.06	170	M54 B30 (306S3)
	M3 3.2	06.00-07.06	252	S54 B32 (326S4)
	M3 CSL 3.2	06.03-07.06	265	S54 B32 (326S4)
3 Coupe (E92)	320 i	11.06-06.07	110	N46 B20A/N46N B20B
3 Touring (E46)	316 i	03.02-02.05	85	N46 B18A/N42 B18A
	316 i	06.02-02.05	85	N45 B16 A
	318 i	09.01-02.05	105	N46 B20A/N42 B20A
	320 i	10.02-02.05	125	M54 B22 (226S1)
	325 i	10.02-02.05	141	M54 B25 (256S5)
	325 xi	10.02-02.05	141	M54 B25 (256S5)
	330 i	10.02-02.05	170	M54 B30 (306S3)
	330 xi	10.02-02.05	170	M54 B30 (306S3)
3 Touring (E91)	318 i	01.06-06.12	95	N46 B20 B
	320 i	09.05-06.12	110	N46 B20 A/_B20 C
5 (E39)	520 i	10.02-06.03	125	M54 B22 (226S1)
	525 i	10.02-06.03	141	M54 B25 (256S5)
	530 i	10.02-06.03	170	M54 B30 (306S3)
5 (E60)	520 i	07.03-03.10	125	M54 B22 (226S1)
	525 i	09.03-03.10	141	M54 B25 (256S5)
	530 i	07.03-03.10	170	M54 B30 (306S3)
	540 i	07.05-03.10	225	N62 B40 A
	545 i	09.03-03.10	245	N62 B44 A
	550 i	07.05-03.10	270	N62 B48 A/_B
5 Touring (E39)	520 i	10.02-05.04	125	M54 B22 (226S1)
	525 i	10.02-05.04	141	M54 B25 (256S5)
	530 i	10.02-05.04	170	M54 B30 (306S3)
5 Touring (E61)	525 i	06.04-	141	M54 B25 (256S5)
	545 i	06.04-	245	N62 B44 A
	550 i	07.05-	270	N62 B48 A/_B
6 (E63)	645 Ci	01.04-	245	N62 B44 A
	650 i	07.05-	270	N62 B48 B
6 Cabriolet (E64)	645 Ci	04.04-	245	N62 B44 A
	650 i	07.05-	270	N62 B48 B
7 (E65, E66, E67)	730 i,Li	03.03-	170	M54 B30 (306S3)
	735 i,Li	11.01-	200	N62 B36 A
	740 i,Li	07.05-	225	N62 B40 A
	745 i,Li	11.01-	245	N62 B44 A
	750 i,Li	07.05-	270	N62 B48 B
	760 i,Li	01.03-	327	N73 B60 A
X1 (E84)	sDrive 18 i	01.10-	110	N46 B20 B
X3 (E83)	2.0 i	07.05-	110	N46 B20 B
	2.5 i	01.04-	141	M54 B25 (256S5)
	3.0 i xDrive	01.04-	170	M54 B30 (306S3)
	xDrive 20 i	09.08-	110	N46 B20 B
X5 (E53)	3.0 i	11.02-12.06	163	M54 B30 (306S3)
	4.4 i	12.03-09.06	235	N62 B44
	4.8 is	04.04-09.06	265	N62 B48 A
X5 (E70)	4.8 i xDrive	02.07-09.08	261	N62 B48 B
	xDrive 48 i	09.08-06.13	261	N62 B48 B
Z3 (E36)	M 3.2	06.01-01.03	239	S54 B32 (326S4)
Z3 Coupe (E36)	M 3.2	06.01-06.03	239	S54 B32 (326S4)
Z4 (E85)	2.0 i	04.05-	110	N46 B20B/N46 B20A

< CL602

BMW

Z4 (E85)	2.2 i	10.03-	125	M54 B22 (226S1)
	2.5 i	02.03-	141	M54 B25 (256S5)
	3.0 i	02.03-	170	M54 B30 (306S3)
	M 3.2	03.06-	252	S54 B32 (326S4)
Z4 Coupe (E86)	M 3.2	03.06-	252	S54 B32 (326S4)

CL603

OEM-No.

BMW 12137571643
12137562744
PSA 5970.64
V7 562 744
V7 571 643 80

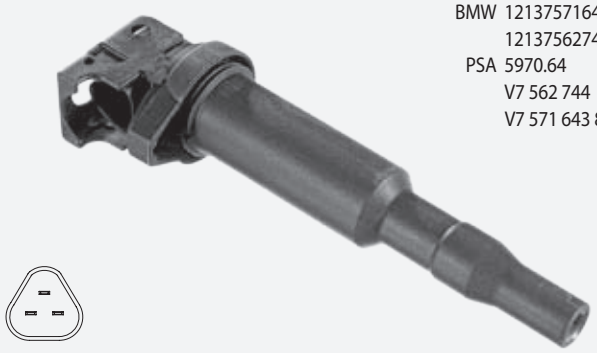

1 coil per cylinder

BMW

1 (E81)	130 i	09.06-09.12	190	N52 B30 A/_BF/_B
	130 i	09.06-09.12	195	N52 B30 A/_BF/_B
1 Cabriolet (E88)	125 i	03.08-	160	N52 B30 A
	135 i	03.08-	225	N55 B30A/N54 B30A
1 Coupe (E82)	125 i	10.07-	160	N52 B30 A
	135 i	10.07-	225	N55 B30A/N54 B30A
3 (E90)	325 i	05.06-12.11	160	N52 B25 A
	325 xi	05.06-12.11	160	N52 B25 A
	330 i	05.06-08.07	190	N52 B30 A
	335 i	09.06-12.11	225	N55 B30A/N54 B30A
	335 i xDrive	09.08-12.11	225	N55 B30A/N54 B30A
	335 xi	09.07-12.11	225	N55 B30A/N54 B30A
3 Cabriolet (E93)	325 i	03.07-	160	N52 B25 A
	335 i	03.07-	225	N54 B30B/N55 B30A
3 Coupe (E92)	325 i	09.06-	160	N52 B25 A
	325 xi	09.06-	160	N52 B25 A
	330 i	09.06-	200	N52 B30 A
	335 i	09.06-	225	N55 B30A/N54 B30A
	335 i xDrive	09.08-	225	N55 B30A/N54 B30A
	335 xi	09.06-	225	N55 B30A/N54 B30A
3 Touring (E91)	325 i	05.06-06.12	160	N52 B25 A
	325 xi	05.06-06.12	160	N52 B25 A
	330 i	05.06-08.07	190	N52 B30 A
	335 i	09.06-06.12	225	N55 B30A/N54 B30A
	335 i xDrive	09.08-06.12	225	N55 B30A/N54 B30A
	335 xi	03.07-06.12	225	N55 B30A/N54 B30A
5 (E60)	523 i	05.06-03.10	130	N52 B25 A
	525 i	05.06-03.10	160	N52 B25 A
	530 i	05.06-03.10	190	N52 B30 A
	530 xi	05.06-03.10	190	N52 B30 A
5 (F10, F18)	550 i	02.10-	300	N63 B44 A
	550 i xDrive	08.10-	300	N63 B44 A
5 Gran Turismo (F07)	550 i	10.09-	300	N63 B44 A
	550 i xDrive	09.10-	300	N63 B44 A
5 Touring (E61)	523 i	05.06-	130	N52 B25 A
	525 i	05.06-	160	N52 B25 A
	530 i	05.06-	190	N52 B30 A
	530 xi	05.06-	190	N52 B30 A
6 (E63)	630 i	05.06-	190	N52 B30 A
6 Cabriolet (E64)	630 i	05.06-	190	N52 B30 A
6 Cabriolet (F12)	650 i	03.11-	300	N63 B44 A
6 Coupe (F13)	650 i	11.10-	300	N63 B44 A
7 (E65, E66, E67)	730 i,Li	05.06-	190	N52 B30 A
7 (F0_)	740 i	10.08-	240	N54 B30 A
	750 i	10.08-	300	N63 B44 A
	750 i xDrive	09.09-	300	N63 B44
	760 i	09.09-	400	N74 B60 A
	4.4 ActiveHybrid	10.10-	342	N63 B44 A

< CL603

BMW				
X1 (E84)	xDrive 25 i	01.10-	160	N52 B30 A
	xDrive 28 i	10.09-	190	N52 B30 A
X3 (E83)	2.5 si	09.06-	160	N52 B25 A
	3.0 si	09.06-	200	N52 B30 A
	xDrive 25 i	09.08-	160	N52 B25 A
	xDrive 30 i	09.08-	200	N52 B30 A
X3 (F25)	xDrive 28 i	04.11-	190	N52 B30 A
X5 (E70)	3.0 si	02.07-09.08	200	N52 B30 A
	M 4.4	09.09-06.13	408	S63 B44 A
	xDrive 30 i	09.08-03.10	200	N52 B30 A
	xDrive 50 i	06.10-06.13	300	N63 B44 A
X6 (E71, E72)	35 i	05.08-	225	N54 B30 A
	50 i	05.08-	300	N63 B44 A
	ActiveHybrid	10.10-	357	N63 B44 A
	M 4.4	09.09-	408	S63 B44 A
	xDrive 35 i	09.08-	225	N55 B30A/N54 B30A
	xDrive 50 i	09.08-	300	N63 B44 A
Z4 (E85)	2.5 i	05.06-	130	N52 B25 A
	2.5 si	05.06-	160	N52 B25 A
	3.0 si	05.06-	195	N52 B30 A
Z4 (E89)	sDrive 23 i	05.09-	150	N52 B25 A
	sDrive 30 i	05.09-	190	N52 B30 A
	sDrive 35 i	05.09-	225	N54 B30 A
	sDrive 35 is	09.10-	250	N54 B30 A
Z4 Coupe (E86)	3.0 si	05.06-	195	N52 B30 A
CITROEN				
Berlingo (B9)	1.6 VTi 120	11.09-	88	5FS (EP6C)
	1.6 VTi 95	07.10-	72	5FK (EP6CB)
Berlingo Van	1.6 VTi 120	11.09-	88	5FS (EP6C)
	1.6 VTi 95	07.10-	72	5FK (EP6CB)
C3 II	1.4 VTi 95	11.09-	70	8FP (EP3)
	1.6 VTi 120	11.09-	88	5FS (EP6C)
C3 Picasso	1.4 VTi 95	02.09-	70	8FS/8FN/8FP)
	1.6 VTi 120	02.09-	88	5FS/5FW)
C4 Coupe (LA_)	1.6 THP 150	07.08-07.11	110	5FX (EP6DT)
	1.6 VTi 120	07.08-07.11	88	5FW (EP6)
C4 Grand Picasso I	1.6 16V	07.08-	103	5FT (EP6DT)
	1.6 16V	10.08-	110	5FX (EP6DT)
	1.6 THP 155	09.10-	115	5FV (EP6CDT)
	1.6 VTi 120	07.08-	88	5FW (EP6)
C4 Grand Picasso II	1.6 VTi 120	09.13-	88	5FS (EP6C)
C4 I (LC_)	1.6 THP 140	07.08-07.11	103	5FT (EP6DT)
	1.6 THP 150	07.08-07.11	110	5FX (EP6DT)
	1.6 VTi 120	07.08-07.11	88	5FW (EP6)
C4 II (B7)	1.4 VTi 95	11.09-	70	8FP (EP3)
	1.6 THP 155	11.09-	115	5FV (EP6CDT)
	1.6 VTi 120	11.09-	88	5FS (EP6C)
	1.6 VTi 120 LPG	09.11-	88	5FS (EP6C)
C4 Picasso I (UD_)	1.6 16V	07.08-08.13	110	5FX (EP6DT)
	1.6 THP 140	07.08-08.13	103	5FT (EP6DT)
	1.6 THP 155	09.10-08.13	115	5FV (EP6CDT)
	1.6 VTi 120	07.08-08.13	88	5FW (EP6)
C4 Picasso II	1.6 VTi 120	02.13-	88	5FS (EP6C)
	1.6 THP 155	02.13-	115	5FV (EP6CDT)
C5 III (RD_)	1.6 THP 155	04.09-	115	5FV (EP6CDT)
	1.6 VTi 120	07.10-	88	5FS (EP6C)
C5 III Break (TD_)	1.6 THP 155	04.09-	115	5FV (EP6DT)
	1.6 VTI 120	07.10-	88	5FS (EP6C)
DS3	1.4 VTi 95	04.10-	70	8FP (EP3)
	1.4 VTi 98	11.09-	72	8FR (EP3)
	1.6 THP 155	04.10-	115	5FV/5FR
	1.6 VTi 120	04.10-	88	5FS (EP6C)
DS3 Cabriolet	1.6 THP 150	01.13-	110	5FN (EP6CDT)
	1.6 THP 155	01.13-	115	5FV (EP6CDT)
	1.6 VTi 120	01.13-	88	5FS (EP6C)
DS4	1.6 THP 155	04.11-	115	5FV (EP6CDT)
	1.6 THP 200	04.11-	147	5FU (EP6DTX)
	1.6 VTi 120	04.11-	88	5FS (EP6C)
DS5	1.6 THP 155	11.11-	115	5FV (EP6CDT)
	1.6 THP 200	11.11-	147	5FU (EP6DTX)

< CL603

MINI				
Mini (R50, R53)	1.6 Cooper Works	03.06-09.06	160	W11 B16 A
Mini (R56)	1.4 One	11.06-03.10	70	N12 B14 A
	1.4 One	03.09-03.10	55	N12 B14 A
	1.6 Cooper	10.06-02.12	88	N12 B16 A
	1.6 Cooper	09.09-11.13	90	N16 B16 A
	1.6 Cooper Works	03.08-11.13	155	N14 B16 C
	1.6 One	03.10-11.13	55	N16 B16 A
	1.6 One	03.10-11.13	72	N16 B16 A
Mini Cabriolet (R57)	1.6 Cooper	03.09-	88	N12 B16 A
	1.6 Cooper	03.10-	90	N16 B16 A
	1.6 Cooper S	03.09-	128	N14 B16 A
	1.6 Cooper Works	03.08-	155	N14 B16 C
	1.6 One	03.10-	72	N16 B16 A
Mini Clubman (R55)	1.6 Cooper	10.07-12.13	88	N16 B16 A
	1.6 Cooper	03.10-	90	N16 B16 A
	1.6 Cooper S	10.07-02.10	128	N14 B16 A
	1.6 One	03.10-	72	N16 B16 A
Mini Countryman	1.6 Cooper	06.10-	90	N16 B16 A
	1.6 One	06.10-	72	N16 B16 A
PEUGEOT				
207 (WA_, WC_)	1.4 16V	06.07-	70	EP3C/8FS/EP3
	1.6 16V Turbo	10.09-	115	5FR (EP6DT)
	1.6 16V VTi	02.07-	88	5FS (EP6C)/EP6
207 CC (WD_)	1.6 16V	02.07-	88	5FS (EP6C)/EP6
	1.6 16V Turbo	10.09-	115	5FR (EP6DT)
207 SW (WK_)	1.4 16V	06.07-	70	EP3C/8FS/EP3
	1.6 16V	06.07-	88	5FS (EP6C)/EP6
208	1.4	03.12-	70	EP3C/8FS (EP3)
	1.6	03.12-	88	5FS (EP6C)
	1.6	03.12-	115	EP6CDT/5FV
	1.6 THP 165	03.15-	121	
2008	1.6 VTi	03.13-	88	5FS (EP6C)
308 (4A_, 4C_)	1.4 16V	09.07-	70	8FS (EP3)/EP3
	1.4 16V	12.09-	72	
	1.6 16V	09.07-	88	EP6
	1.6 16V	09.07-	103	5FT (EP6DT)
	1.6 16V	10.09-	115	EP6CDT
308 CC	1.6 16V	06.09-	88	EP6
	1.6 16V	06.09-	103	5FT (EP6DT)
	1.6 16V	06.09-	115	EP6CDT
308 II	1.6	09.13-	115	
308 SW	1.4 16V	09.07-	70	8FS (EP3)
	1.4 16V	12.09-	72	
	1.6 16V	09.07-	88	EP6
3008	1.6 THP	06.09-	115	5FV (EP6DT)
	1.6 VTi	06.09-	88	5FS (EP6C)/EP6
508	1.6 THP	11.10-	115	EP6CDT
	1.6 VTi	11.10-	88	5FS (EP6C)
508 SW	1.6 THP	11.10-	115	EP6CDT
	1.6 VTi	11.10-	88	5FS (EP6C)
5008	1.6 16V	09.09-	88	5FS (EP6C)/EP6
	1.6 16V	09.09-	115	EP6CDT
Partner Tepee	1.6	04.10-	88	5FS (EP6C)
Partner Van	1.6	04.10-	88	
RCZ	1.6 16V	03.10-	115	EP6CDT
	1.6 16V	06.10-	147	EP6CDTX

CL604

PIN

OEM-No.

MERCEDES 0001500280
0001587003
0001587103
A0001500280
A0001587003

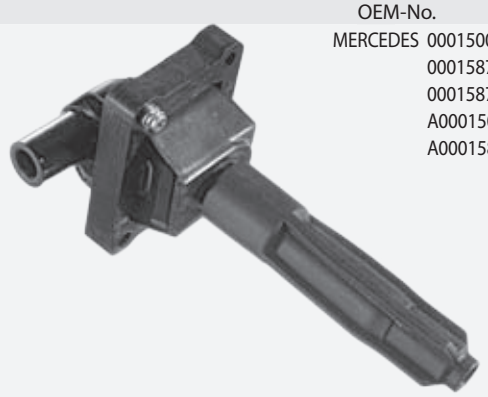

semidirect - 2 (3) coils and ignition lead set T743C/T982C (T623C/T624C)

MERCEDES

C-Class (W202)	C 180	09.95-05.00	90	M 111.921
	C 180	11.94-05.00	89	M 111.921
	C 200	09.95-05.00	100	M 111.945
	C 200 Kompressor	10.95-05.00	132	M 111.944
	C 200 Kompressor	11.96-05.00	141	M 111.944
	C 220	06.96-06.97	110	M 111.974
	C 230 Kompressor	10.95-05.00	142	M 111.975
	C 280	05.93-05.00	142	M 104.941
C-Class Kombi (S202)	C 180 T	06.96-09.00	90	M 111.921
	C 200 T	06.96-03.01	100	M 111.945
	C 200 T Kompr.	11.96-03.01	141	M 111.944
	C 230 T	06.96-06.98	110	M 111.974
	C 230 T Kompr.	06.97-09.00	142	M 111.975
CLK (C208)	200	06.97-06.02	100	M 111.945
	200 Kompressor	06.97-06.00	141	M 111.944
	230 Kompressor	06.97-06.00	142	M 111.975/_.973
CLK Cabriolet (A208)	200	03.98-03.02	100	M 111.941
	200 Kompressor	03.98-06.00	141	M 111.944
	230 Kompressor	03.98-06.00	142	M 111.975/_.973
Coupe (C124)	320 CE	10.92-05.93	162	M 104.992
E-Class (W124)	E 280	06.93-06.95	145	M 104.942
	E 280	06.93-06.95	142	M 104.942
	E 320	06.93-06.95	162	M 104.992
E-Class (W210)	E 200	06.95-08.00	100	M 111.942
	E 230	06.95-06.97	110	M 111.970
	E 280	01.96-06.97	142	M 104.945
	E 320	06.95-06.97	162	M 104.995
E-Class Cabrio (A124)	E 320	06.93-03.98	162	M 104.992
	E 36 AMG	05.94-03.98	200	M 104.992 AMG
E-Class Coupe (C124)	E 320	06.93-06.97	162	M 104.992
	E 36 AMG	05.94-06.97	200	M 104.992 AMG
	E 36 AMG	06.93-04.95	195	M 104.992 AMG
E-Class Kombi (S124)	E 280 T	06.93-06.96	142	M 104.942
	E 280 T	06.93-06.96	145	M 104.942
	E 320 T	06.93-06.96	162	M 104.992
	E 36 T AMG	05.94-06.96	200	M 104.992 AMG
E-Class Kombi (S210)	E 200 T	06.96-08.00	100	M 111.942
	E 230 T	06.96-06.97	110	M 111.970
G-Class (W463)	G 320	09.94-12.97	155	M 104.996
	G 36 AMG	01.95-	200	M 104.996 AMG
G-Class Cabrio (W463)	320 GE	09.94-11.97	155	M 104.996
Kombi (S124)	280 TE	10.92-06.93	145	M 104.942
	320 TE	10.92-06.93	162	M 104.992
S-Class (W140)	300 SE 2.8	01.93-10.98	145	M 104.944
	300 SE,SEL/S320	03.91-10.98	170	M 104.994
	S 280	02.93-10.98	142	M 104.944
Sedan (W124)	280 E	10.92-06.93	145	M 104.942
	320 E	10.92-06.93	162	M 104.992
SL (R129)	280	08.93-10.01	142	M 104.943
	320	09.93-10.01	170	M 104.991
SLK (R170)	200	09.96-03.00	100	M 111.946
Sprinter 2-t Bus	214	02.95-05.06	105	M 111.979
Sprinter 2-t Flatbed	214	02.95-05.06	105	M 111.979
Sprinter 2-t Van	214	02.95-05.06	105	M 111.979/_.984
Sprinter 3-t Bus	314	02.95-05.06	105	M 111.984

< CL604

MERCEDES

Sprinter 3-t Flatbed	314	02.95-05.06	105	M 111.984
Sprinter 3-t Van	314	02.95-05.06	105	M 111.979/_.984
Sprinter 4-t Bus	414	02.96-05.06	105	M 111.979
Sprinter 4-t Flatbed	414	02.96-05.06	105	M 111.979
	414 4x4	05.97-05.06	105	M 111.979
Sprinter 4-t Van	414	02.96-05.06	105	M 111.979
	414 4x4	05.97-05.06	105	M 111.979
V-Class (638/2)	V 200	02.97-07.03	95	M 111.948/_.950
	V 230	10.96-07.03	105	M 111.978
Vito Bus (638)	113 2.0	02.96-07.03	95	M 111.948/_.950
	114 2.3	12.96-07.03	105	M 111.978
Vito Van (638)	113 2.0	03.97-07.03	95	M 111.948/_.950
	114 2.3	03.97-07.03	105	M 111.978

VW

LT 28-35 II Bus	2.3	05.96-07.06	105	AGL
LT 28-46 II Flatbed	2.3	06.96-07.06	105	AGL
LT 28-46 II Van	2.3	05.96-07.06	105	AGL

CL605

PIN

OEM-No.

MERCEDES 0001587303
0001587803
A0001587303
A0001587803

CHRYSLER

Crossfire	3.2	07.03-12.08	160	EGX
	3.2 SRT-6	09.04-12.07	246	EGZ
Crossfire Roadster	3.2	05.04-12.08	160	EGX
	3.2 SRT-6	09.04-12.06	246	EGZ

MERCEDES

A-Class (W169)	A 150	09.04-06.12	70	M 266.920
	A 160	04.09-06.12	70	M 266.920
	A 170	09.04-06.12	85	M 266.940
	A 180	04.09-06.12	85	M 266.940
	A 200	09.04-06.12	100	M 266.960
	A 200 Turbo	09.05-06.12	142	M 266.980
B-Class (W245)	B 150	03.05-11.11	70	M 266.920
	B 160	04.09-11.11	70	M 266.920
	B 170	03.05-11.11	85	M 266.940
	B 180	04.09-11.11	85	M 266.940
	B 200	03.05-11.11	100	M 266.960
	B 200 Turbo	03.05-11.11	142	M 266.980
C-Class (W202)	C 240	06.97-05.00	125	M 112.910
	C 280	06.97-05.00	145	M 112.920
	C 43 AMG	08.97-05.00	225	M 113.944
C-Class (W203)	C 230	01.05-02.07	150	M 272.920
	C 240	05.00-02.07	125	M 112.912
	C 240 4-matic	07.02-02.07	125	M 112.916
	C 32 AMG Kompr.	02.01-02.07	260	M 112.961
	C 320	05.00-02.07	160	M 112.946
	C 320 4-matic	07.02-02.07	160	M 112.953
	C 350	01.05-02.07	200	M 272.960
	C 350 4-matic	01.05-02.07	200	M 272.960/_.970
	C 55 AMG	02.04-02.07	270	M 113.988
C-Class Coupe (CL203)	C 32 AMG Kompr.	05.02-05.08	260	M 112.961
	C 320	09.02-05.08	160	M 112.946
	C 350	01.05-05.08	200	M 272.960
C-Class Kombi (S202)	C 240 T	06.97-09.00	125	M 112.910
	C 240 T	09.00-03.01	125	M 112.915
	C 280 T	06.97-03.01	145	M 112.920
	C 43 AMG	08.97-03.01	225	M 113.944

< CL605

MERCEDES

C-Class T-Model (S203)	C 240	03.01-08.07	125	M 112.912
	C 240 4-matic	07.02-08.07	125	M 112.916
	C 32 AMG Kompr.	03.01-08.07	260	M 112.961
	C 320	03.01-08.07	160	M 112.946
	C 320 4-matic	07.02-08.07	160	M 112.953
	C 350	01.05-08.07	200	M 272.960
	C 350 4-matic	01.05-08.07	200	M 272.970
	C 55 AMG	02.04-08.07	270	M 113.988
CLK (C208)	320	06.97-06.02	160	M 112.940
	430	07.98-06.02	205	M 113.943
	55 AMG	08.99-06.02	255	M 113.981/_.984
CLK (C209)	240	06.02-05.09	125	M 112.912
	320	06.02-05.09	160	M 112.955
	500	06.06-05.09	285	M 273.965
	500	06.02-05.09	225	M 113.968
	55 AMG	09.02-05.09	270	M 113.987
	55 DTM AMG	06.04-05.09	428	M 113.994
CLK Cabriolet (A208)	320	03.98-03.02	160	M 112.940
	430	09.98-03.02	205	M 113.943
	55 AMG	01.00-03.02	255	M 113.981/_.984
CLK Cabriolet (A209)	CLK 240	02.03-03.10	125	M 112.912
	CLK 320	02.03-03.10	160	M 112.955
	CLK 500	02.03-03.10	225	M 113.968
	CLK 55 AMG	02.03-03.10	270	M 113.987
CLS (C219)	CLS 500	10.04-12.10	225	M 113.967
	CLS 55 AMG	01.05-12.10	350	M 113.990
E-Class (W210)	E 240	06.97-08.00	125	M 112.911
	E 240	08.00-03.02	125	M 112.914
	E 280	12.96-03.02	150	M 112.921
	E 280 4-matic	12.96-03.02	150	M 112.921
	E 320	06.97-03.02	165	M 112.941
	E 320 4-matic	06.97-03.02	165	M 112.941
	E 430	06.97-03.02	205	M 113.940
	E 430 4-matic	05.99-03.02	205	M 113.940
	E 55 AMG	08.97-03.02	260	M 113.980
	E 55 AMG 4-matic	03.01-03.02	260	M 113.980
E-Class (W211)	E 240	03.02-12.08	130	M 112.917/_.913
	E 240 4-matic	03.03-12.08	130	M 112.917
	E 320	03.02-12.08	165	M 112.949
	E 320 4-matic	03.03-12.08	165	M 112.954
	E 500	03.02-12.08	225	M 113.967
	E 500	04.06-12.08	285	M 273.960
	E 500 4-matic	10.03-12.08	225	M 113.969
	E 500 4-matic	04.06-12.08	285	M 273.962
	E 55 AMG Kompr.	10.02-12.08	350	M 113.990
E-Class Kombi (S210)	E 240 T	06.97-03.03	125	M 112.911
	E 240 T	08.00-03.03	125	M 112.914
	E 280 T	12.96-03.03	150	M 112.921
	E 280 T 4-matic	12.96-03.03	150	M 112.921
	E 320 T	12.96-03.03	165	M 112.941
	E 320 T 4-matic	12.96-03.03	165	M 112.941
	E 430 T	06.97-03.03	205	M 113.940
	E 430 T 4-matic	05.99-03.03	205	M 113.940
	E 55T AMG	08.97-03.03	260	M 113.980
	E 55T AMG 4-matic	03.01-03.03	260	M 113.980
E-Class T-Model (S211)	E 240 T	03.03-07.09	130	M 112.913
	E 240 T 4-matic	07.03-07.09	130	M 112.917
	E 320 T	03.03-07.09	165	M 112.949
	E 320 T 4-matic	07.03-07.09	165	M 112.954
	E 500 T	10.03-07.09	225	M 113.967
	E 500 T	04.06-07.09	285	M 273.960
	E 500 T 4-matic	10.03-07.09	225	M 113.969
	E 500 T 4-matic	04.06-07.09	285	M 273.962
	E 55T AMG Kompr.	07.03-07.09	350	M 113.990
G-Class (W463)	G 320	07.97-	158	M 112.945
	G 500	04.98-	218	M 113.962
	G 55 AMG	04.99-	260	M 113.982
	G 55 AMG	08.08-	373	M 113.993
	G 55 AMG	06.04-	350	M 113.993
	G 55 AMG	08.06-	368	M 113.993
G-Class Cabrio (W463)	G 320	11.97-	158	M 112.945

< CL605

MERCEDES

G-Class Cabrio (W463)	G 500	04.98-	218	M 113.962
M-Class (W163)	ML 320	02.98-08.02	160	M 112.942
	ML 350	08.02-06.05	180	M 112.970
	ML 350 4-matic	02.03-06.05	173	M 112.970
	ML 430	02.98-06.05	200	M 113.942
	ML 500	09.01-06.05	215	M 113.964/_.965
	ML 55 AMG	02.00-06.05	255	M 113.981
M-Class (W164)	ML 500 4-matic	07.05-	225	M 113.964
R-Class (W251, V251)	R 500 4-matic	01.06-	225	M 113.971
S-Class (W220)	S 280	10.98-08.05	150	M 112.922
	S 320	10.98-08.05	165	M 112.944
	S 350	09.02-08.05	180	M 112.972
	S 350 4-matic	06.03-08.05	180	M 112.975
	S 430	10.98-08.05	205	M 113.941
	S 430 4-matic	09.02-08.05	205	M 113.948
	S 500	10.98-08.05	225	M 113.960/_.966
	S 500 4-matic	09.02-08.05	225	M 113.966
	S 55 AMG	04.99-08.05	265	M 113.986
	S 55 AMG Kompr.	06.02-08.05	368	M 113.991
S-Class Coupe (C215)	CL 500	03.99-03.06	225	M 113.960
	CL 55 AMG	10.99-03.06	265	M 113.986
	CL 55 AMG Kompr.	06.02-03.06	368	M 113.991
SL (R129)	280	05.98-10.01	150	M 112.923
	320	05.98-10.01	165	M 112.943
	500	05.98-10.01	225	M 113.961
	55 AMG	03.00-10.01	260	M 113.985
SL (R230)	500	03.06-01.12	285	M 273.965
	350	03.03-01.12	180	M 112.973
	500	10.01-01.12	225	M 113.963
	55 AMG	03.06-01.12	380	M 113.995
	55 AMG	10.01-06.02	350	M 113.992
	55 AMG Kompr.	06.02-01.12	368	M 113.992
SLK (R170)	32 AMG Kompr.	03.01-04.04	260	M 112.960
	320	03.00-04.04	160	M 112.947
SLK (R171)	55 AMG	06.04-02.11	265	M 113.989
SLR (R199)	5.4	04.04-	460	M 155.980
	5.4 722 Edition	10.06-	478	M 155.980
SLR Roadster (R199)	5.4	04.07-	460	M 155.980
	5.4	10.06-	478	M 155.980
Viano (W639)	3.0	09.03-	140	M 112.951
	3.2	09.03-	160	M 112.951
	3.7	06.04-	170	M 112.976
Vito / Mixto Van (W639)	119	09.03-	140	M 112.951
	122	09.03-	160	M 112.951
Vito Bus (W639)	119	09.03-	140	M 112.951
	122	09.03-	160	M 112.951
	123	06.04-	170	M 112.976

CL606

PIN	OEM-No.
DAEWOO	0001587003
MERCEDES	0001587103
	0001587503
	A0001587103
	A 0001587503
SSANG YONG	0001587003

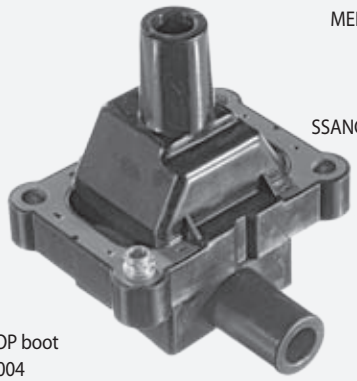

coil without COP boot
spare boot CP004
semidirect - 2 (3) coils and ignition lead set T743C/T982C (T623C/T624C)

DAEWOO

Korando (KJ)	2.3	01.99-	105	M 161.970
	3.2 4x4	01.99-	156	M 104.995
Korando Cabrio (KJ)	2.0 16V	02.99-	94	M 161.950
	2.3	02.99-	105	M 161.970

CL606 ▶

< CL606

DAEWOO				
Musso (FJ)	2.3	01.99-	103	M 111.970
	3.2 4x4	01.99-	162	M 104.992
Rexton (GAB_)	3.2 V6	04.02-	162	M 162.992
MERCEDES				
C-Class (W202)	C 180	09.95-05.00	90	M 111.921
	C 180	11.94-05.00	89	M 111.921
	C 200	09.95-05.00	100	M 111.945
	C 200 Kompressor	10.95-05.00	132	M 111.944
	C 200 Kompressor	11.96-05.00	141	M 111.944
	C 220	06.96-06.97	110	M 111.974
	C 230 Kompressor	10.95-05.00	142	M 111.975
	C 280	05.93-05.00	142	M 104.941
	C 36 AMG	05.94-05.00	206	M 104.941 AMG
C-Class Kombi (S202)	C 180 T	06.96-09.00	90	M 111.921
	C 200 T	06.96-03.01	100	M 111.945
	C 200 T Kompr.	11.96-03.01	141	M 111.944
	C 230 T	06.96-06.98	110	M 111.974
	C 230 T Kompr.	06.97-09.00	142	M 111.975
CLK (C208)	200	06.97-06.02	100	M 111.945
	200 Kompressor	06.97-06.00	141	M 111.944
	230 Kompressor	06.97-06.00	142	M 111.975/_.973
CLK Cabriolet (A208)	200	03.98-03.02	100	M 111.941
	200 Kompressor	03.98-06.00	141	M 111.944
	230 Kompressor	03.98-06.00	142	M 111.975/_.973
E-Class (W210)	E 200	06.95-08.00	100	M 111.942
	E 200 Kompressor	06.97-03.02	137	M 111.947
	E 230	06.95-06.97	110	M 111.970
E-Class Kombi (S210)	E 200 T	06.96-08.00	100	M 111.942
	E 200 T Kompr.	06.97-03.03	137	M 111.947
	E 230 T	06.96-06.97	110	M 111.970
M-Class (W163)	ML 230	02.98-06.05	110	M 111.977
S-Class (W140)	300 SE 2.8	01.93-10.98	145	M 104.944
	300 SE,SEL/S320	03.91-10.98	170	M 104.994
	S 280	02.93-10.98	142	M 104.944
SLK (R170)	200	09.96-03.00	100	M 111.946
	200 Kompressor	03.00-04.04	120	M 111.958
	200 Kompressor	10.96-03.00	141	M 111.943
	230 Kompressor	09.96-03.00	142	M 111.973
Sprinter 2-t Bus	214	02.95-05.06	105	M 111.979
	214 NGT	04.00-05.06	92	M 111.984
Sprinter 2-t Flatbed	214	02.95-05.06	105	M 111.979
	214 NGT	04.00-05.06	92	
Sprinter 2-t Van	214	02.95-05.06	105	M 111.979/_.984
	214 NGT	04.00-05.06	92	M 111.984
Sprinter 3-t Bus)	314	02.95-05.06	105	M 111.984
	314 4x4	08.02-05.06	105	M 111.984
	314 NGT	04.00-05.06	92	M 111.984
Sprinter 3-t Flatbed	314	02.95-05.06	105	M 111.984
	314 4x4	08.02-05.06	105	M 111.984
	314 NGT	04.00-05.06	92	
Sprinter 3-t Van	314	02.95-05.06	105	M 111.979/_.984
	314 4x4	08.02-05.06	105	M 111.984
	314 NGT	04.00-05.06	92	
Sprinter 4-t Bus	414	02.96-05.06	105	M 111.979
Sprinter 4-t Flatbed	414	02.96-05.06	105	M 111.979
	414 4x4	05.97-05.06	105	M 111.979
Sprinter 4-t Van	414	02.96-05.06	105	M 111.979
	414 4x4	05.97-05.06	105	M 111.979
V-Class (638/2)	V 200	02.97-07.03	95	M 111.948/_.950
	V 230	10.96-07.03	105	M 111.978
Vito Bus (638)	113 2.0	02.96-07.03	95	M 111.948/_.950
	114 2.3	12.96-07.03	105	M 111.978
Vito Van (638)	113 2.0	03.97-07.03	95	M 111.948/_.950
	114 2.3	03.97-07.03	105	M 111.978
SSANG YONG				
Korando (KJ)	2.0	05.97-	94	
	2.3	05.97-	103	M 111.970
	2.3	01.99-	105	
	3.2	12.96-	154	M 104.995
	3.2	01.99-	156	M 104.995
	3.2	06.97-	162	M 104.992

< CL606

SSANG YONG				
Korando Cabrio (KJ)	2.3	11.97-	103	
	2.3	02.99-	105	
	3.2	01.99-	156	M 104.995
	3.2	06.97-	162	M 104.992
Musso (FJ)	2.0	10.96-	93	E20
	2.3	10.96-	103	M 111.970
	2.3	04.03-	110	
	3.2	06.96-	162	M 104.992
Rexton (GAB_)	3.2	04.02-	162	G32D
TAGAZ				
Road Partner	2.3 4x4	01.08-	110	
	3.2 4x4	01.08-	162	
Tager	2.3	10.08-	110	
	2.3 4x4	10.08-	110	
Tager	3.2 4x4	10.08-	162	

CL607

PIN

OEM-No.

SMART 0003100V003
0003100V004
0003100V005
C0003100V003
C0003100V004
C0003100V005

SMART				
Cabrio (450)	0.6	03.00-01.04	40	M 160 E6AL / _.920
	0.6	01.01-01.04	45	M 160 E6AL / _.920
	0.6	06.02-01.04	52	M 160.920
	0.7	01.03-01.04	45	M 160.910
	0.7	01.03-01.04	55	M 160.910
City-Coupe (450)	0.6	07.98-01.04	33	M 160 E6AL / _.920
	0.6	07.98-01.04	40	M 160 E6AL / _.920
	0.6	01.01-01.04	45	M 160 E6AL / _.920
	0.6	06.02-01.04	52	M 160.920
	0.7	01.03-01.04	37	M 160.910
	0.7	01.03-01.04	45	M 160.910
	0.7	01.03-01.04	55	M 160.910
Crossblade (450)	0.6	06.02-12.03	52	M 160.920
Fortwo Cabrio (450)	0.7	01.04-01.07	45	M 160.910
	0.7	01.04-01.07	55	M 160.910
Fortwo Coupe (450)	0.7	01.04-01.07	37	M 160.910
	0.7	01.04-01.07	45	M 160.910
	0.7	01.04-01.07	55	M 160.910
Roadster (452)	0.7	04.03-11.05	45	M 160.921
	0.7	04.03-11.05	60	M 160.922
	0.7 Brabus	12.03-11.05	74	M 160.923
Roadster Coupe (452)	0.7	06.03-11.05	45	M 160.922
	0.7	04.03-11.05	60	M 160.921
	0.7 Brabus	12.03-11.05	74	M 160.923

CL609

DIN

OEM-No.
MERCEDES 0001584503
0001584803
0001585003
0001585303
0001586103

MERCEDES

190 (W201)	E 1.8	04.90-08.93	80	M 102.910
	E 2.0	10.82-06.93	90	M 102.961/_.962
	E 2.3	10.86-08.93	100	M 102.985
	E 2.3-16	09.85-12.87	125	M 102.983
	E 2.3-16	09.85-08.88	130	M 102.983
	E 2.3-16	04.84-01.87	136	M 102.983
	E 2.5-16	03.89-08.93	143	M 102.991
	E 2.5-16	09.88-08.93	150	M 102.990
	E 2.6	09.86-08.93	118	M 103.942
	E Evolution II 2.5	05.90-08.93	173	M 102.992
Coupe (C124)	230 CE	03.87-12.92	100	M 102.982
	230 CE	03.87-12.92	97	M 102.982
	230 CE cat	06.89-12.92	97	M 102.982
	300 CE	03.87-05.93	132	M 103.983
E-Class (W124)	E 300 4-matic	06.93-06.95	132	M 103.985
E-Class Kombi (S124)	E 300 T 4-matic	06.93-06.96	132	M 103.985
G-Class (W461)	230 GE	06.93-	92	M 102.996/_.997
G-Class (W463)	230 GE	06.90-06.93	93	M 102.989
	300 GE	06.90-	128	M 103.987
	300 GE	06.90-	125	M 103.987
G-Class Cabrio (W463)	230 GE	06.90-02.93	93	M 102.989
	300 GE	09.89-09.97	125	M 103.987
Kombi (S124)	200 T	01.86-05.90	77	M 102.922
	200 T	09.85-08.89	80	M 102.922
	200 TE	09.88-12.89	90	M 102.962
	200 TE	09.88-08.92	87	M 102.963
	230 TE	09.85-08.92	100	M 102.982
	230 TE	09.85-08.92	97	M 102.982
	230 TE cat	06.89-08.92	97	M 102.982
	300 TE 4-matic	09.86-06.93	132	M 103.985
S-Class (W126)	260 SE	09.85-06.91	118	M 103.941
	260 SE	09.85-06.91	122	M 103.941
	300 SE,SEL	01.86-06.91	132	M 103.981
	300 SE,SEL	09.85-12.89	138	M 103.981
	380 SE,SEL	12.79-08.85	150	M 116.963
	500 SE,SEL	12.79-08.85	170	M 117.961/_.963
	500 SE,SEL	12.79-08.85	177	M 117.961/_.963
S-Class (W140)	400 SE,SEL/S420	02.91-10.98	210	M 119.971
	500 SE,SEL	02.91-05.93	240	M 119.970
	600 SE,SEL	04.91-12.92	300	M 120.982/_.980
	S 420	01.93-10.98	205	M 119.971
	S 500	01.93-10.98	235	M 119.970
	S 600	01.93-10.98	290	M 120.982/_.980
S-Class Coupe (C126)	380 SEC	10.81-07.85	150	M 116.963
	500 SEC	10.81-08.85	170	M 117.963
S-Class Coupe (C140)	SEC/CL 500	10.92-02.99	235	M 119.970
Sedan (W124)	200	01.86-05.90	77	M 102.922
	200	01.86-05.90	75	M 102.922
	200	12.85-05.90	80	M 102.922
	200 E	09.88-08.92	87	M 102.963
	200 E	09.88-12.89	90	M 102.963
	230 E	12.84-03.92	97	M 102.982
	230 E	01.85-06.93	100	M 102.982
	230 E cat	06.89-06.93	97	M 102.982

< CL609

MERCEDES

Sedan (W124)	260 E	09.85-08.92	118	M 103.940
	260 E	09.85-12.89	122	M 103.940
	260 E 4-matic	09.86-08.92	118	M 103.943
	260 E 4-matic	12.86-12.89	122	M 103.940
	300 E 4-matic	09.86-06.93	132	M 103.985
	500 E	01.91-06.93	240	M 119.974
	500 E AMG 6.0	01.92-06.93	275	
SL (R107)	500 SL	05.80-12.85	170	M 117.960
	500 SL	05.80-12.81	177	M 117.960
SL (R129)	500 SL	09.89-08.92	240	M 119.960/_.972

CL610

OEM-No.
MERCEDES 0001501380

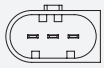

MERCEDES

A-Class (W168)	A 140	07.97-08.04	60	M 166.940
	A 140	01.01-08.04	60	M 166.960
	A 160	07.97-08.04	75	M 166.960
	A 190	03.99-08.04	92	M 166.990
	A 210	03.02-08.04	103	M 166.995
Vaneo (414)	1.6	02.02-07.05	60	M 166.961
	1.6	02.02-07.05	75	M 166.961
	1.9	02.02-07.05	92	M 166.991

CL611

PIN

OEM-No.
MERCEDES 0001500480
0001586803
A0001500480
A0001586803

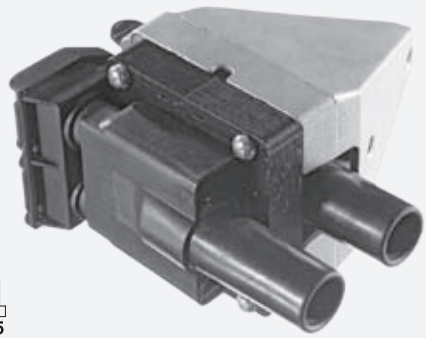

MERCEDES

C-Class (W202)	C 180	03.93-08.95	90	M 111.920
	C 200	01.94-08.95	100	M 111.941
	C 220	03.93-05.00	110	M 111.961
C-Class Kombi (S202)	C 180 T	06.96-09.00	90	M 111.920
	C 200 T	06.96-03.01	100	M 111.941
Coupe (C124)	220 CE	10.92-05.93	110	M 111.960
E-Class (W124)	E 200	06.93-06.95	100	M 111.940
	E 220	06.93-06.95	110	M 111.960
E-Class Cabrio (A124)	E 200	06.93-03.98	100	M 111.940
	E 220	06.93-03.98	110	M 111.960
E-Class Coupe (C124)	E 200	06.93-06.97	100	M 111.940
	E 220	06.93-06.97	110	M 111.960
E-Class Kombi (S124)	E 200 T	06.93-06.96	100	M 111.940
	E 220 T	06.93-06.96	110	M 111.960
Kombi (S124)	200 TE	05.86-06.93	100	M 111.940
	220 TE	10.92-05.93	110	M 111.960

CL611 ▶

< CL611

MERCEDES

Sedan (W124)	200 E	10.92-06.93	100	M 111.940
	220 E	10.92-06.93	110	M 111.960

CL612

DIN

OEM-No.
MERCEDES 0001586403

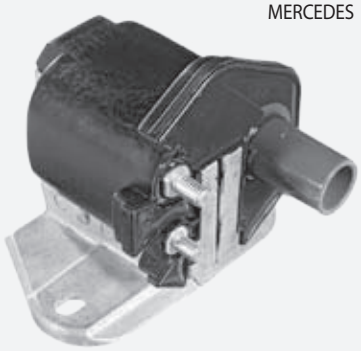

M6 M5

MERCEDES

Cabriolet (A124)	300 CE-24	04.92-06.93	162	M 104.980
Coupe (C124)	300 CE-24	09.89-12.92	162	M 104.980
E-Class (W124)	E 420	06.93-06.95	205	M 119.975
	E 500	06.93-06.95	235	M 119.974
G-Class (W463)	300 GE	06.90-07.93	128	M 103.987
Kombi (S124)	300 TE-24	09.89-08.92	162	M 104.980
S-Class (W126)	420 SE,SEL	10.85-06.91	165	M 116.965
	420 SE,SEL	10.85-12.87	170	M 116.965
	420 SE,SEL	10.85-12.87	160	M 116.965
	420 SE,SEL	10.85-06.91	150	M 116.965
	500 SE,SEL	09.87-06.91	185	M 117.965
	500 SE,SEL	09.87-06.91	195	M 117.965
	500 SE,SEL	09.85-06.91	164	M 117.965
	500 SE,SEL	09.85-06.91	180	M 117.964/_.965
	500 SE,SEL cat	06.89-06.91	185	M 117.965
	560 SE,SEL	08.87-06.91	205	M 117.968
	560 SE,SEL	10.85-06.91	220	M 117.968
	560 SE,SEL	10.85-12.87	200	M 117.968
	560 SE,SEL	10.85-06.91	178	M 117.968
S-Class (W140)	600 SE,SEL	04.91-12.92	300	M 120.982/_.980
	S 600	01.93-10.98	290	M 120.982/_.980
S-Class Coupe (C126)	420 SEC	10.85-06.91	150	M 116.965
	420 SEC	10.85-12.87	160	M 116.965
	420 SEC	10.85-06.91	165	M 116.965
	500 SEC	10.85-06.91	164	M 117.965
	500 SEC	09.85-06.91	180	M 117.965
	500 SEC	08.87-06.91	185	M 117.965
	500 SEC	09.85-06.91	195	M 117.965
	500 SEC cat	06.89-06.91	185	M 117.965
	560 SEC	10.85-06.91	178	M 117.968
	560 SEC	10.85-12.87	200	M 117.968
	560 SEC	10.85-06.91	205	M 117.968
	560 SEC	10.85-12.89	220	M 117.968
S-Class Coupe (C140)	SEC/CL 600	09.92-02.99	290	M 120.982/_.980
Sedan (W124)	300 E-24	09.88-08.92	162	M 104.980
	400 E 4.2	10.92-06.93	205	M 119.975
	500 E	01.91-06.93	240	M 119.974
SL (R129)	500	09.92-10.01	235	M 119.972
	600	07.92-10.01	290	M 120.981

CL613

DIN

OEM-No.
MERCEDES 0001586503
A0001586503

M6 M5

MERCEDES

E-Class (W124)	E 420	06.93-06.95	205	M 119.975
	E 500	06.93-06.95	235	M 119.974
	E 60 AMG	05.94-06.95	280	M 119.974 AMG
S-Class (W140)	300 SE,SEL/S320	03.91-10.98	170	M 104.990
	400 SE,SEL/S420	09.92-10.98	210	M 119.971
	500 SE,SEL	02.91-05.93	240	M 119.970
	600 SE,SEL	04.91-12.92	300	M 120.982/_.980
	S 500	06.93-10.98	235	M 119.970
	S 600	01.93-10.98	290	M 120.982/_.980
S-Class Coupe (C140)	SEC/CL 420	10.94-02.99	205	M 119.971
	SEC/CL 500	10.92-02.99	235	M 119.970
	SEC/CL 600	09.92-02.99	290	M 120.982/_.980
Sedan (W124)	400 E 4.2	10.92-06.93	205	M 119.975
	500 E	01.91-06.93	240	M 119.974
	500 E AMG 6.0	01.92-06.93	275	
SL (R107)	420 SL	01.86-08.89	150	M 116.964
	420 SL	01.86-08.89	160	M 116.964
	500 SL	01.86-08.89	164	M 117.964
	500 SL	01.86-08.89	180	M 117.964/_.960
SL (R129)	300 SL-24	03.89-07.93	170	M 104.981
	500	09.92-10.01	235	M 119.972
	600	07.92-10.01	290	M 120.981

CL614

DIN

OEM-No.
MERCEDES 0001585003
0001586203
A0001586203

M6 M5

MERCEDES

190 (W201)	E 2.3-16	09.85-12.87	125	M 102.983
	E 2.3-16	09.85-08.88	130	M 102.983
	E 2.3-16	04.84-01.87	136	M 102.983
	E 2.5-16	03.89-08.93	143	M 102.991
	E 2.5-16	09.88-08.93	150	M 102.990
	E Evolution II 2.5	05.90-08.93	173	M 102.992
Coupe (C124)	230 CE	03.87-12.92	100	M 102.982
	230 CE	03.87-12.92	97	M 102.982
	230 CE cat	06.89-12.92	97	M 102.982
E-Class (W124)	E 60 AMG	05.94-06.95	280	M 119.974 AMG
G-Class (W461)	230 GE	02.93-	90	M 102.979
G-Class (W463)	230 GE	06.90-06.93	93	M 102.989
	300 GE	06.90-07.93	128	M 103.987
	300 GE	06.90-	125	M 103.987
G-Class Cabrio (W463)	230 GE	06.90-02.93	93	M 102.989
	300 GE	09.89-09.97	125	M 103.987

< CL614

MERCEDES

Kombi (S124)	200 T	01.86-05.90	77	M 102.922
	200 T	09.85-08.89	80	M 102.922
	200 TE	09.88-12.89	90	M 102.962
	200 TE	09.88-08.92	87	M 102.963
	230 TE	09.85-08.92	100	M 102.982
	230 TE	09.85-08.92	97	M 102.982
	230 TE cat	06.89-08.92	97	M 102.982
S-Class (W126)	260 SE	09.85-06.91	118	M 103.941
	260 SE	09.85-06.91	122	M 103.941
	300 SE,SEL	01.86-06.91	132	M 103.981
	300 SE,SEL	09.85-12.89	138	M 103.981
S-Class (W140)	400 SE,SEL/S420	02.91-05.93	210	M 119.971
	500 SE,SEL	02.91-05.93	240	M 119.970
	S 420	06.93-10.98	205	M 119.971
	S 500	06.93-10.98	235	M 119.970
S-Class Coupe (C140)	SEC/CL 500	10.92-02.99	235	M 119.970
Sedan (W124)	200	01.86-05.90	77	M 102.922
	200	01.86-05.90	75	M 102.922
	200	12.85-05.90	80	M 102.922
	200 E	09.88-08.92	87	M 102.963
	200 E	09.88-12.89	90	M 102.963
	230 E	12.84-03.92	97	M 102.982
	230 E	01.85-06.93	100	M 102.982
	230 E cat	06.89-06.93	97	M 102.982
	260 E	09.85-08.92	118	M 103.940
	260 E	09.85-12.89	122	M 103.940
	500 E	01.91-06.93	240	M 119.974
	500 E AMG 6.0	01.92-06.93	275	
SL (R129)	300 SL	03.89-08.93	140	M 103.984
	500 SL	09.89-08.92	240	M 119.960/_.972

CL615

PIN

OEM-No.
BMW 12131247281

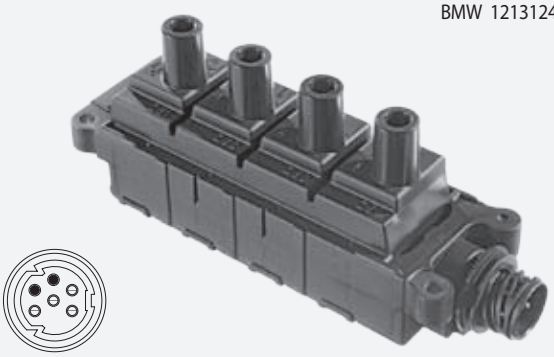

BMW

3 (E30)	318 is	09.89-08.91	100	M42 B18 (184S1)
3 (E36)	316 i	07.93-02.98	75	M43 B16 (164E2)
	318 i	10.93-02.98	85	M43 B18 (184E2)
	318 is	09.93-02.98	103	M42 B18 (184S1)
	318 is	09.95-02.98	103	M44 B19 (194S1)
3 (E46)	316 i	09.98-02.05	77	M43 B19 (194E1)
	316 i	04.00-02.05	77	M43 B16 (164E3)
	318 i	02.98-09.01	87	M43 B19 (194E1)
3 Cabriolet (E36)	318 i	01.94-04.99	85	M43 B18 (184E2)
	316 g	03.94-08.00	75	M43 B16 (164E2)
	316 i	03.94-08.00	75	M43 B16 (164E2)
	316 i	12.98-08.00	77	M43 B19 (194E1)
	318 ti	11.94-08.95	103	M42 B18 (184S1)
	318 ti	07.95-08.00	103	M44 B19 (194S1)
3 Coupe (E36)	316 i	09.93-04.99	75	M43 B16 (164E2)
	318 is	03.92-10.95	103	M42 B18 (184S1)
	318 is	09.95-04.99	103	M44 B19 (194S1)
3 Coupe (E46)	316 Ci	04.00-07.06	77	M43 B16 (164E3)
	318 Ci	11.99-09.01	87	M43 B19 (194E1)
3 Touring (E36)	316 i	01.96-10.99	75	M43 B16 (164E2)
	318 i	07.95-10.99	85	M43 B18 (184E2)
3 Touring (E46)	318 i	10.99-09.01	87	M43 B19 (194E1)
5 (E34)	518 i	08.89-09.95	85	M43 B18 (184E2)

< CL615

BMW

5 Touring (E34)	518 g	11.95-06.96	85	M43 B18 (184E2)
	518 i	09.94-01.97	85	M43 B18 (184E2)
Z3 (E36)	1.8	10.95-10.98	85	M43 B18 (184E2)
	1.9	10.95-03.99	103	M44 B19 (194S1)
	1.9	07.98-01.03	87	M43 B19 (194E1)
	1.9	01.99-01.03	85	M43 B19 (194E1)

CL616

OEM-No.
MERCEDES 0001501780
0001502880
A0001501780
A0001502880

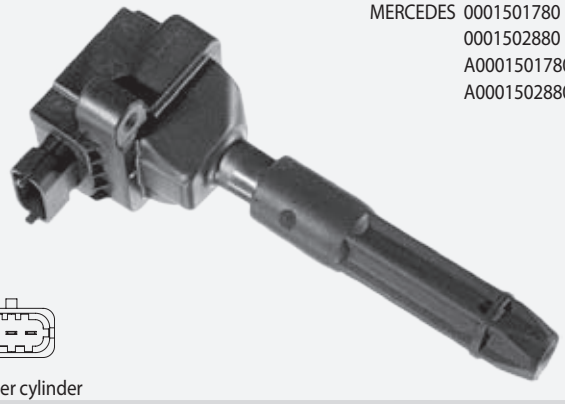

1 coil per cylinder

MERCEDES

C-Class (W203)	C 180	10.00-05.02	95	M 111.951
	C 200 Kompressor	05.00-06.02	120	M 111.955
C-Class Coupe (CL203)	C 180	03.01-05.02	95	M 111.951
	C 200 Kompressor	03.01-05.02	120	M 111.955
	C 230 Kompressor	03.01-05.02	145	M 111.981
C-Class Kombi (S202)	C 180 T	09.00-03.01	95	M 111.952
	C 200 T Kompr.	09.00-03.01	120	M 111.956
C-Class T-Model (S203)	C 180	03.01-05.02	95	M 111.951
	C 200 Kompressor	03.01-05.02	120	M 111.955
CLK (C208)	200 Kompressor	06.00-06.02	120	M 111.956
	230 Kompressor	06.00-06.02	145	M 111.982
CLK Cabriolet (A208)	200 Kompressor	06.00-03.02	120	M 111.956
	230 Kompressor	06.00-03.02	145	M 111.982
E-Class (W210)	E 200 Kompressor	08.00-03.02	120	M 111.957
E-Class Kombi (S210)	E 200 T Kompr.	08.00-03.03	120	M 111.957
SLK (R170)	200 Kompressor	03.00-04.04	120	M 111.958
	230 Kompressor	03.00-04.04	145	M 111.983

CL617

OEM-No.
MERCEDES 0001587203

coil without COP boot
1 coil per cylinder

MERCEDES

E-Class (W210)	E 420	01.96-06.97	205	M 119.985
	E 50 AMG	02.96-08.97	255	M 119.985 AMG
E-Class Kombi (S210)	E 420 T	06.96-06.97	205	M 119.985
S-Class (W140)	400 SE,SEL/S420	02.91-10.98	210	M 119.971
	500 SE,SEL	06.93-10.98	240	M 119.970
	S 500	01.93-10.98	235	M 119.980
S-Class Coupe (C140)	SEC/CL 420	10.94-02.99	205	M 119.981
	SEC/CL 500	10.92-02.99	235	M 119.970
SL (R129)	500	09.92-10.01	235	M 119.982
	60 AMG	05.97-10.01	280	M 122.981
	600	07.92-10.01	290	M 120.983

CL618

OEM-No.
MERCEDES 0001501580
A0001501580

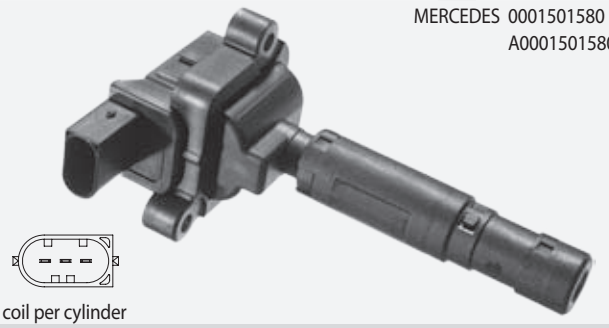

1 coil per cylinder

MERCEDES

C-Class (W203)	C 180 Kompressor	05.02-11.06	105	M 271.946
	C 200 CGI Kompr.	07.03-11.06	125	M 271.942
	C 200 Kompressor	05.02-11.06	120	M 271.940
	C 230 Kompressor	02.04-11.06	141	M 271.948
C-Class Coupe (CL203)	C 160 Kompressor	05.02-11.06	90	M 271.921
	C 180 Kompressor	05.02-11.06	105	M 271.946
	C 200 CGI Kompr.	03.03-11.06	125	M 271.942
	C 200 Kompressor	05.02-11.06	120	M 271.940
	C 230 Kompressor	02.04-11.06	141	M 271.948
C-Class T-Model (S203)	C 180 Kompressor	05.02-11.06	105	M 271.946
	C 200 CGI Kompr.	07.03-11.06	125	M 271.942
	C 200 Kompressor	05.02-11.06	120	M 271.940
	C 230 Kompressor	02.04-11.06	141	M 271.948
CLK (C209)	200 CGI	07.03-11.06	125	M 271.942
	200 Kompressor	09.02-11.06	120	M 271.940
CLK Cabriolet (A209)	CLK 200 Kompr.	02.03-11.06	120	M 271.940
E-Class (W211)	E 200 Kompressor	04.06-11.06	135	M 271.956
	E 200 Kompressor	11.02-11.06	120	M 271.941
E-Class T-Model (S211)	E 200 Kompressor	04.06-11.06	135	M 271.956
	E 200 T Kompr.	03.03-11.06	120	M 271.941
SLK (R171)	200 Kompressor	03.04-11.06	120	M 271.944

CL619

OEM-No.
BMW 12137571644
12137582627
12137594935

1 coil per cylinder

BMW

1 (E81)	116 i	03.07-09.12	90	N43 B16 A
	116 i	11.08-09.12	90	N43 B20 A
	118 i	09.06-09.12	105	N43 B20 A
	120 i	09.06-09.12	125	N43 B20 A
1 Cabriolet (E88)	118 i	03.08-	105	N43 B20 A
	120 i	03.08-	125	N43 B20 A
1 Coupe (E82)	120 i	10.07-	125	N43 B20 A
3 (E90)	318 i	09.07-12.11	105	N43 B20 A
	320 i	09.07-12.11	125	N43 B20 A
	325 i	09.07-12.11	160	N53 B30 A
	325 i xDrive	09.08-12.11	160	N53 B30 A
	325 xi	09.07-12.11	160	N53 B30 A
	330 i	09.07-12.11	200	N52 B30A/N53 B30A
	330 i xDrive	09.08-12.11	200	N53 B30 A
	330 xi	09.07-12.11	200	N53 B30 A
3 Cabriolet (E93)	320 i	03.07-	125	N43 B20 A
	325 i	03.07-	160	N53 B30 A
	330 i	03.07-	200	N52 B30A/N53 B30A
3 Coupe (E92)	320 i	03.07-	125	N43 B20 A
	325 i	09.07-	160	N53 B30 A
	325 i xDrive	09.08-	160	N53 B30 A

< CL619

BMW

3 Coupe (E92)	325 xi	09.07-	160	N53 B30 A
	330 i	09.06-	200	N53 B30 A
	330 i xDrive	09.08-	200	N53 B30 A
	330 xi	09.06-	200	N52 B30A/N53 B30A
3 Touring (E91)	318 i	09.07-06.12	105	N43 B20 A
	320 i	09.07-06.12	125	N43 B20 A
	325 i	09.07-06.12	160	N53 B30 A
	325 i xDrive	09.07-06.12	160	N53 B30 A
	325 xi	09.07-06.12	160	N53 B30 A
	330 i	09.07-06.12	200	N53 B30 A
	330 i xDrive	09.07-06.12	200	N53 B30 A
	330 xi	09.07-06.12	200	N53 B30 A
5 (E60)	520 i	09.07-03.10	125	N43 B20 A
	523 i	01.07-03.10	140	N52 B25A/N53 B25A
	525 i	01.07-03.10	160	N53 B30 A
	525 i xDrive	09.08-03.10	160	N53 B30 A
	525 xi	01.07-03.10	160	N53 B30 A
	530 i	01.07-03.10	200	N52 B30A/N53 B30A
	530 i xDrive	09.08-03.10	200	N52 B30A/N53 B30A
	530 xi	01.07-03.10	200	N52 B30A/N53 B30A
5 (F10, F18)	523 i	12.09-	150	N53 B30 A
	528 i	02.10-	190	N53 B30 A
5 Touring (E61)	520 i	09.07-	125	N43 B20 A
	523 i	01.07-	140	N52 B25A/N53 B25A
	525 i	01.07-	160	N53 B30 A
	525 i xDrive	09.08-	160	N53 B30 A
	525 xi	01.07-	160	N52 B30A/N53 B30A
	530 i	01.07-	200	N52 B30A/N53 B30A
	530 i xDrive	09.08-	200	N52 B30A/N53 B30A
	530 xi	01.07-	200	N52 B30A/N53 B30A
5 Touring (F11)	523 i	09.10-	150	N53 B30 A
	528 i	09.10-	190	N53 B30 A
6 (E63)	630 i	07.07-	200	N52 B30_/N53 B30_
6 Cabriolet (E64)	630 i	07.07-	200	N52 B30_/N53 B30_

CL620

OEM-No.
PORSCHE 94860210400
94860210401
94860210403
94860210405
94860210407
94860210409

1 coil per cylinder

PORSCHE

Cayenne (955)	S 4.5	09.02-09.07	250	M 48.00
	4.5 Turbo	09.02-09.07	331	M 48.50
	S 4.5 Turbo	01.04-09.07	368	M 48.50S

CL621

OEM-No.
MERCEDES 0001501980
0001502680
0001502780
A0001501980
A0001502680
A0001502780

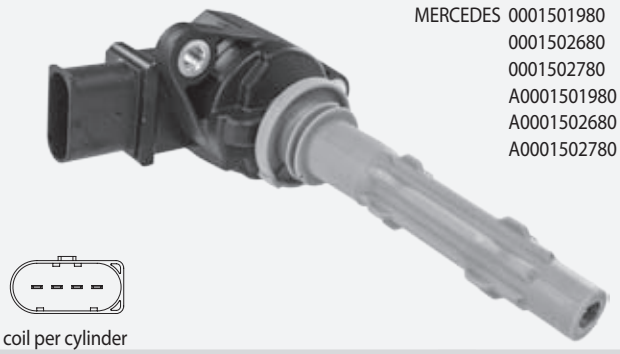

1 coil per cylinder

MERCEDES

C-Class (W203)	C 230	01.05-02.07	150	M 272.920
	C 280	01.05-02.07	170	M 272.940

< CL621

MERCEDES

C-Class (W203)	C 280 4-matic	01.05-02.07	170	M 272.941
	C 350	01.05-02.07	200	M 272.960
	C 350 4-matic	01.05-02.07	200	M 272.960/_.970
C-Class (W204)	C 230	01.07-	150	M 272.921
	C 230 4-matic	07.07-	150	M 272.911
	C 280	01.07-	170	M 272.947
	C 280 4-matic	07.07-	170	M 272.948
	C 300	07.09-	170	M 272.947
	C 300 4-matic	07.07-	170	M 272.948
	C 350	01.07-	200	M 272.961
	C 350	01.11-	225	M 276.957
	C 350 4-matic	07.07-	200	M 272.971
	C 350 4-matic	01.11-	225	M 276.957
C-Class Coupe (CL203)	C 230	01.05-05.08	150	M 272.920
	C 350	01.05-05.08	200	M 272.960
C-Class T-Model (S203)	C 230	01.05-08.07	150	M 272.920
	C 280	01.05-08.07	170	M 272.940
	C 280 4-matic	01.05-08.07	170	M 272.941
	C 350	01.05-08.07	200	M 272.960
	C 350 4-matic	01.05-08.07	200	M 272.970
C-Class T-Model (S204)	C 230	08.07-	150	M 272.921
	C 280	08.07-	170	M 272.947
	C 350	08.07-	200	M 272.961
CLC-Class (CL203)	CLC 230	05.08-06.11	150	M 272.920
	CLC 350	05.08-06.11	200	M 272.960
CLK (C209)	280	01.05-05.09	170	M 272.940
	350	01.05-05.09	200	M 272.960
CLK Cabriolet (A209)	CLK 280	01.05-03.10	170	M 272.940
	CLK 350	01.05-03.10	200	M 272.960
	CLK 500	06.06-03.10	285	M 273.967
CLS (C219)	CLS 280	07.08-12.10	170	M 272.943
	CLS 300	04.09-12.10	170	M 272.943
	CLS 350	10.04-12.10	200	M 272.964
	CLS 500	04.06-12.10	285	M 273.960
E-Class (W211)	E 230	09.07-12.08	150	M 272.922
	E 280	03.05-12.08	170	M 272.943
	E 280 4-matic	01.06-12.08	170	M 272.943
	E 350	03.05-12.08	200	M 272.964
	E 350 4-matic	03.05-12.08	200	M 272.972
	E 500	04.06-12.08	285	M 273.960
	E 500 4-matic	04.06-12.08	285	M 273.962
E-Class (W212)	E 350 4-matic	01.09-08.11	200	M 272.977
	E 500	01.09-	285	M 273.971
	E 500 4-matic	01.09-	285	M 273.970
E-Class Cabrio (A207)	E 500	01.10-	285	M 273.966
E-Class Coupe (C207)	E 500	01.09-	285	M 273.966
E-Class T-Model (S211)	E 230 T	05.07-07.09	150	M 272.922
	E 280 T	03.05-07.09	170	M 272.943
	E 280 T 4-matic	03.05-07.09	170	M 272.943
	E 350 T	03.05-07.09	200	M 272.964
	E 350 T 4-matic	03.05-07.09	200	M 272.972
	E 500 T	04.06-07.09	285	M 273.960
	E 500 T 4-matic	04.06-07.09	285	M 273.962
E-Class T-Model (S212)	E 350 4-matic	11.09-	200	M 272.977
	E 500	11.09-	285	M 273.971
GL-Class (X164)	GL 450 4-matic	09.06-	250	M 273.923
	GL 500 4-matic	09.06-	285	M 273.963
GLK-Class (X204)	280 4-matic	06.08-06.09	170	M 272.948
	300 4-matic	07.09-04.11	170	M 272.948
	350 4-matic	06.08-04.11	200	M 272.971
M-Class (W164)	ML 350 4-matic	07.05-	200	
	ML 500 4-matic	12.07-	285	M 273.963
R-Class (W251, V251)	R 280	01.07-	170	M 272.945
	R 300	07.09-	170	M 272.945
	R 350	01.07-	200	M 272.967
	R 350 4-matic	01.06-	200	M 272.967
	R 500 4-matic	01.07-	285	M 273.963
S-Class (W221)	S 350	10.05-	200	M 272.965
	S 350 4-matic	02.08-	200	M 272.975
	S 350 CGI	04.11-	225	M 276.950
	S 350 CGI 4-matic	04.11-	225	M 276.950

< CL621

MERCEDES

S-Class (W221)	S 450	12.05-	250	M 273.922
	S 450 4-matic	12.05-	250	M 273.924
	S 500	10.05-	285	M 273.961
	S 500 4-matic	10.05-	285	M 273.961/_.968
S-Class Coupe (C216)	CL 500	06.06-	285	M 273.961
	CL 500 4-matic	02.08-	285	M 273.968
SL (R230)	280	03.08-01.12	170	M 272.949
	300	04.09-01.12	170	M 272.949
	350	03.06-01.12	200	M 272.966
	350	04.08-01.12	232	M 272.968
SLK (R171)	280	01.05-02.11	170	M 272.942
	300	04.09-02.11	170	M 272.942
	350	06.04-02.11	200	M 272.963
	350	01.08-02.11	224	M 272.969
Sprinter 3-t Bus (906)	224	06.06-	190	M 272.979
Sprinter 3-t Flatbed	224	06.06-	190	M 272.979
Sprinter 3-t Van (906)	224	06.06-	190	M 272.979
Sprinter 3,5-t Bus (906)	324	06.06-	190	M 272.979
Sprinter 3,5-t Flatbed	324	06.06-	190	M 272.979
Sprinter 3,5-t Van (906)	324	06.06-	190	M 272.979
Sprinter 4,6-t Flatbed	424	06.06-	190	M 272.979
Sprinter 4,6-t Van (906)	424	06.06-	190	M 272.979
Sprinter 5-t Flatbed	524	06.06-	190	M 272.979
Sprinter 5-t Van (906)	524	06.06-	190	M 272.979
Vito / Mixto Van (W639)	126	09.07-	190	M 272.978
Vito Bus (W639)	126	09.07-	190	M 272.978

CL622

OEM-No.
MERCEDES 0001502580
A0001502580

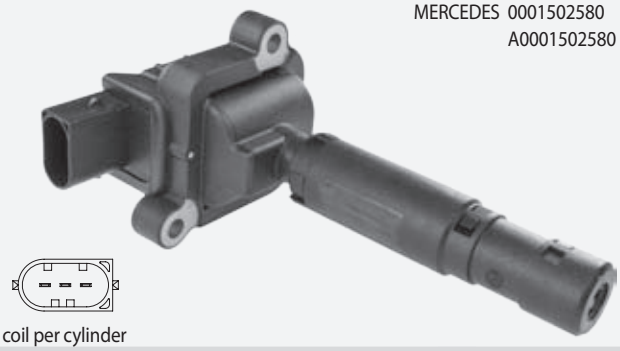

1 coil per cylinder

MERCEDES

C-Class (W203)	C 180 Kompressor	11.06-02.07	105	M 271.946
	C 200 CGI Kompr.	11.06-02.07	125	M 271.942
	C 200 Kompressor	11.06-02.07	120	M 271.940
	C 230 Kompressor	11.06-02.07	141	M 271.948
C-Class (W204)	C 180 CGI	01.07-	115	M 271.820
	C 180 Kompressor	01.08-	115	M 271.910
	C 180 Kompressor	01.07-	115	M 271.952
	C 200 CG	01.07-	135	M 271.820
	C 200 Kompressor	01.07-	135	M 271.950
	C 250 CGI	07.09-	150	M 271.860
C-Class Coupe (C204)	C 180	06.11-	115	M 271.820
	C 250	06.11-	150	M 271.860
C-Class Coupe (CL203)	C 160 Kompressor	11.06-05.08	90	M 271.921
	C 180 Kompressor	11.06-05.08	105	M 271.946
	C 200 CGI Kompr.	11.06-05.08	125	M 271.942
	C 200 Kompressor	11.06-05.08	120	M 271.940
	C 230 Kompressor	11.06-05.08	141	M 271.948
C-Class T-Model (S203)	C 180 Kompressor	11.06-08.07	105	M 271.946
	C 200 CGI Kompr.	11.06-08.07	125	M 271.942
	C 200 Kompressor	11.06-08.07	120	M 271.940
	C 230 Kompressor	11.06-08.07	141	M 271.948
C-Class T-Model (S204)	C 180 CGI	11.09-	115	M 271.820
	C 180 Kompressor	01.08-	115	M 271.910
	C 180 Kompressor	08.07-	115	M 271.952
	C 200 Kompressor	08.07-	135	M 271.950
	C 250	07.09-	150	M 271.860
CLC-Class (CL203)	CLC 160	02.09-06.11	95	M 271.911
	CLC 180 Kompr.	05.08-06.11	105	M 271.946

CL622 ▶

< CL622

MERCEDES				
CLC-Class (CL203)	CLC 200 Kompr.	05.08-06.11	135	M 271.957
CLK (C209)	200 CGI	11.06-05.09	125	M 271.942
	200 Kompressor	10.06-05.09	135	M 271.955
	200 Kompressor	11.06-05.09	120	M 271.940
CLK Cabriolet (A209)	CLK 200 CGI	07.03-03.10	125	M 271.942
	CLK 200 Kompr.	10.06-03.10	135	M 271.955
	CLK 200 Kompr.	11.06-03.10	120	M 271.940
E-Class (W211)	E 200 Kompressor	11.06-12.08	135	M 271.956
	E 200 Kompressor	11.06-12.08	120	M 271.941
	E 200 NGT	11.06-12.08	120	M 271.941
E-Class (W212)	E 200 CGI	08.09-	135	M 271.820/_.860
	E 200 NGT	03.11-	120	M 271.958
	E 250 CGI	01.09-	150	M 271.860
E-Class Cabrio (A207)	E 200 CGI	01.10-	135	M 271.820/_.860
	E 250 CGI	01.10-	150	M 271.860
E-Class Coupe (C207)	E 200 CGI	01.10-	135	M 271.820/_.860
	E 250 CGI	01.09-	150	M 271.860
E-Class T-Model (S211)	E 200 Kompressor	11.06-07.09	135	M 271.956
	E 200 T Kompr.	11.06-07.09	120	M 271.941
E-Class T-Model (S212)	E 200 CGI	11.09-	135	M 271.860
	E 250 CGI	11.09-	150	M 271.860
SLK (R171)	200 Kompressor	11.06-02.11	120	M 271.944
	200 Kompressor	01.08-02.11	135	M 271.954
SLK (R172)	200	02.11-	135	M 271.860/_.861
	250	02.11-	150	M 271.860/_.861
Sprinter 3,5-t Bus	316	09.08-	115	M 271.951
Sprinter 3,5-t Flatbed	316	09.08-	115	M 271.951
Sprinter 3,5-t Van	316	09.08-	115	M 271.951
Sprinter 5-t Flatbed	516	09.08-	115	M 271.951

CL623

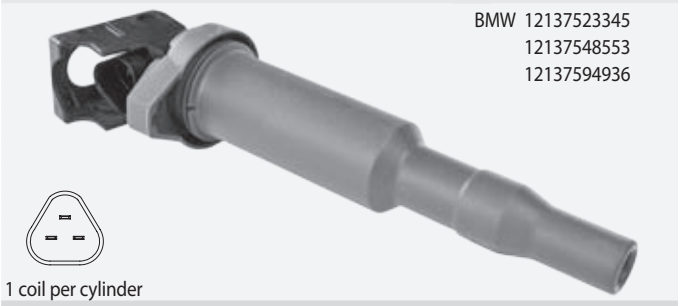

OEM-No.
BMW 12137523345
12137548553
12137594936

1 coil per cylinder

BMW				
3 (E90)	325 i	01.05-04.06	160	N52 B25 A
	325 xi	01.05-04.06	160	N52 B25 A
	330 i	01.05-04.06	190	N52 B30 A
	330 xi	01.05-08.07	190	N52 B30 A
3 Touring (E91)	323 i	04.06-06.07	130	N52 B25 A
	325 i	09.05-04.06	160	N52 B25 A
	325 xi	09.05-04.06	160	N52 B25 A
	330 i	09.05-04.06	190	N52 B30 A
	330 xi	09.05-08.07	190	N52 B30 A
5 (E60)	523 i	07.05-04.06	130	N52 B25 A
	525 i	07.05-04.06	160	N52 B25 A
	525 xi	07.05-03.10	160	N52 B25 A
	530 i	07.05-04.06	190	N52 B30 A
	530 xi	07.05-04.06	190	N52 B30 A
5 Touring (E61)	523 i	07.05-04.06	130	N52 B25 A
	525 i	07.05-04.06	160	N52 B25 A
	525 xi	07.05-	160	N52 B25 A
	530 i	07.05-04.06	190	N52 B30 A
	530 xi	07.05-04.06	190	N52 B30 A
6 (E63)	630 i	09.04-04.06	190	N52 B30 A
6 Cabriolet (E64)	630 i	09.04-04.06	190	N52 B30 A
7 (E65, E66, E67)	730 i,Li	03.05-04.06	190	N52 B30 A
Z4 (E85)	2.5 i	01.06-04.06	130	N52 B25 A
	2.5 si	01.06-04.06	160	N52 B25 A
	3.0 si	01.06-04.06	195	N52 B30 A
Z4 Coupe (E86)	3.0 si	03.06-04.06	195	N52 B30 A

CL624

OEM-No.
BMW 7838388
78428001
784175401
12137838388
12137841754

1 coil per cylinder

BMW				
3 (E90)	M3 4.0	03.07-12.11	309	S65 B40 A
3 Cabriolet (E93)	M3 4.0	03.07-	309	S65 B40 A
3 Coupe (E92)	M 4.0	03.07-	309	S65 B40 A

CL625

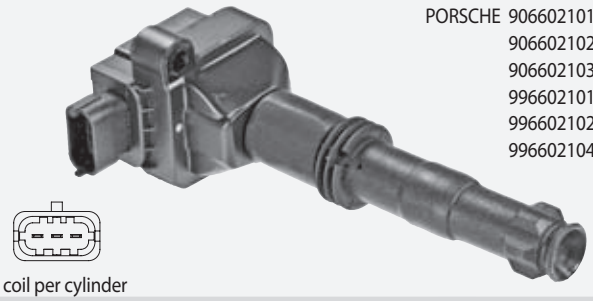

OEM-No.
PORSCHE 90660210101
90660210200
90660210301
99660210101
99660210200
99660210400

1 coil per cylinder

PORSCHE				
911 (996)	3.4 Carrera	09.97-09.01	221	M 96.01/M 96.04
	3.4 Carrera 4	09.97-09.01	221	M 96.01/M 96.04
	3.6 Carrera	10.01-08.05	235	M 96.03
	3.6 Carrera 4	10.01-08.05	235	M 96.03
	3.6 Carrera S	02.03-08.05	254	M 96.03
	3.6 Carrera 4S	02.03-08.05	254	M 96.03
	3.6 GT2	04.01-08.05	340	M 96.70
	3.6 GT2	10.03-08.05	355	M 96.70
	3.6 GT3	03.99-08.05	265	M 96.76
	3.6 GT3	03.03-08.05	280	M 96.79
	3.6 Turbo 4	06.00-08.05	309	M 96.70
	3.6 Turbo 4S	02.03-08.05	331	M 96.70
911 (997)	3.6 Carrera	07.04-12.08	239	M 96.05
	3.6 GT 3	03.06-12.09	305	M 97.76
	3.6 Turbo	03.06-12.09	353	M 97.70
	3.8 Carrera 4S	07.04-12.08	261	M 97.01
	3.8 Carrera S	07.04-12.08	261	M 97.01
911 Cabriolet (996)	3.4 Carrera	02.98-09.01	221	M 96.01/M 96.04
	3.4 Carrera 4	02.98-09.01	221	M 96.02/M 96.04
	3.6 Carrera	10.01-08.05	235	M 96.03
	3.6 Carrera 4	10.01-08.05	235	M 96.03
	3.6 Carrera S	06.02-08.05	254	M 96.03
	3.6 Carrera 4S	06.02-08.05	254	M 96.03
	3.6 Turbo 4	10.03-08.05	309	M 96.70
	3.6 Turbo 4S	10.03-08.05	331	M 96.70
911 Cabriolet (997)	3.6 Carrera	04.05-12.08	239	M 96.05
	3.6 Carrera 4	04.05-12.08	239	M 96.05
	3.6 Turbo	09.07-12.09	353	M 97.70
	3.8 Carrera S	04.05-12.08	261	M 97.01
	3.8 Carrera 4S	04.05-12.08	261	M 97.01
911 Targa (996)	3.6	12.01-08.05	235	M 96.03
Boxster (986)	2.5	09.96-08.99	150	M 96.20
	2.7	08.99-07.02	162	M 96.22
	2.7	07.02-12.04	168	M 96.23
	S 3.2	08.99-07.02	185	M 96.21
	S 3.2	07.02-12.04	191	M 96.24
	S 3.2	01.04-12.04	196	M 96.24
Boxster (987)	2.7	11.04-12.06	176	M 96.25
	2.7	07.06-12.09	180	M 97.20
	S 3.2	11.04-12.06	206	M 96.26
	S 3.4	07.06-12.09	217	M 97.21

< CL625

PORSCHE				
Cayman (987)	2.7	07.06-12.09	180	M 97.20
	S 3.4	11.05-12.09	217	M 97.21

CL626

OEM-No.
BMW 7619385
761938505
864746301
12137619385

1 coil per cylinder

BMW				
2 Active Tourer (F45)	218 i	09.14-	100	B38 A15 _
	225 i	09.14-	170	B48 A20 B
i8 (I12)	1.5 hybrid	03.14-	170	B38 K15 A
MINI				
Mini (F55)	1.5 Cooper	07.14-	100	B38 A15 A
	2.0 Cooper S	07.14-	141	B46 A20A/B48 A20A
Mini (F56)	1.2 One	03.14-	75	B38 A12 A
	1.2 One First	06.14-	55	B38 A12 A
	1.5 Cooper	12.13-	100	B38 A15 A
	2.0 Cooper S	12.13-	141	B46 A20A/B48 A20A

CL627

OEM-No.
MERCEDES 1561500080
A1561500080
1561500380
A1561500380
1569060400
A1569060400

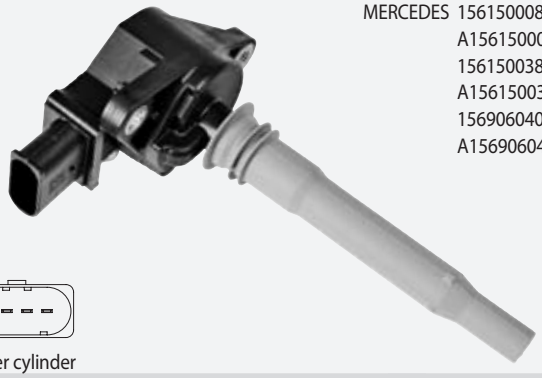

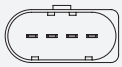

1 coil per cylinder

MERCEDES				
C-Class (W204)	C 63 AMG	02.08-01.14	358	M 156.985
	C 63 AMG	02.08-01.14	336	M 156.985
C-Class Coupe (C204)	C 63 AMG	01.12-	358	M 156.985
	C 63 AMG	01.12-	380	M 156.985
	C 63 AMG	06.11-	336	M 156.985
C-Class T-Model (S204)	C 63 AMG	01.12-08.14	358	M 156.985
	C 63 AMG	02.08-	336	M 156.985
CLK (C209)	63 AMG	04.06-05.09	354	M 156.982
	63 AMG	05.07-05.09	373	M 156.982
CLK Cabriolet (A209)	CLK 63 AMG	04.06-03.10	354	M 156.982
CLS (C219)	CLS 63 AMG	04.06-12.10	378	M 156.983
E-Class (W211)	E 63 AMG	03.06-12.08	378	M 156.983
E-Class (W212)	E 63 AMG	12.09-	386	M 156.985
E-Class T-Model (S211)	E 63 AMG	03.06-07.09	378	M 156.983
E-Class T-Model (S212)	E 63 AMG	08.09-	386	M 156.985
M-Class (W164)	ML63 AMG 4-matic	01.06-	375	M 156.980
R-Class (W251, V251)	R 63 AMG	02.06-	375	M 156.980
S-Class (W221)	S 63 AMG	10.06-	386	M 156.984
S-Class Coupe (C216)	CL 63 AMG	10.06-	386	M 156.984
SL (R230)	63 AMG	03.08-01.12	386	M 156.981

CL628

PIN

OEM-No.
MERCEDES 0001587903
A0001587903
0009060060
A0009060060
2729060160
A2729060160

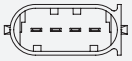

MERCEDES				
C-Class (W204)	C 350 CGI	09.08-01.14	215	M 272.982
CLS (C219)	CLS 350	04.06-12.10	215	M 272.985
	CLS 350 CGI	04.09-12.10	215	M 272.985
E-Class (W211)	E 350 CGI	09.07-12.08	215	M 272.985
E-Class (W212)	E 350 CGI	01.09-08.11	215	M 272.983/_.982
E-Class Cabriolet (A207)	E 350	01.10-	215	M 272.982/_.984
E-Class Coupe (C207)	E 350	01.09-	215	M 272.982/_.984
E-Class T-Model (S211)	350 CGI	05.06-07.09	215	M 272.985
E-Class T-Model (S212)	E 350 CGI	11.09-	215	M 272.983

CL629

OEM-No.
MERCEDES 2721500280
A2721500280
2761500080
A2761500080
2769060160
A2769060160

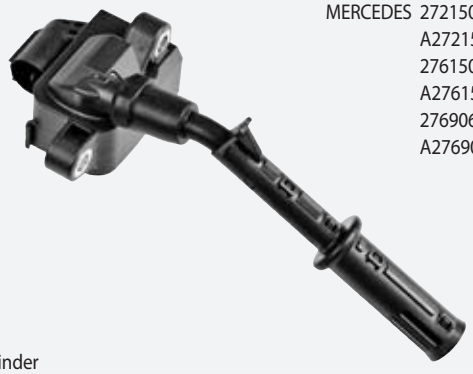

1 coil per cylinder

MERCEDES				
C-Class (W204)	C 300	02.11-01.14	185	M 276.957
	C 300 4-matic	02.11-01.14	185	M 276.957
C-Class Coupe (C204)	C 350	06.11-	225	M 276.957
C-Class T-Model (S204)	C 350 CGI	06.11-08.14	225	M 276.957
CLS (C218)	CLK 63 AMG	02.11-	386	M 157.981
	CLK 63 AMG	01.11-	410	M 157.981
	CLS 63 AMG	02.13-	430	M 157.981
	CLS 63 AMG	05.13-	410	M 157.981
CLS Shooting Brake	CLS 350	10.12-	225	M 276.952
	CLS 500	10.12-	300	M 278.922
	CLS 500 4-matic	10.12-	300	M 278.922
	CLS 63 AMG	05.13-	410	M 157.981
	CLS 63 AMG	02.13-	430	M 157.981
	CLS 63 AMG 4-mat	05.13-	410	M 157.981
E-Class (W212)	E 300	07.11-	185	M 276.952
	E 63 AMG	02.11-	386	M 157.980/_.981
	E 63 AMG	02.11-	410	M 157.981
	E 63 AMG	02.13-	430	M 157.981
	E 63 AMG 4-matic	02.13-	430	M 157.981
	E 63 AMG 4-matic	02.11-	410	M 157.981
E-Class Cabrio (A207)	E 300	04.11-	185	M 276.957
	E 350	04.11-	225	M 276.957
	E 500	09.11-	300	M 278.922
E-Class Coupe (C207)	E 300	04.11-	185	M 276.957
	E 350	04.11-	225	M 276.957
	E 500	09.11-	300	M 278.922
E-Class T-Model (S212)	E 300	07.11-	185	M 276.952
	E 300 4-matic	07.11-	185	M 276.952
	E 350	09.11-	225	M 276.952
	E 350 4-matic	09.11-	225	M 276.952
	E 500	09.11-	300	M 278.922
	E 500 4-matic	09.11-	300	M 278.922
	E 63 AMG	02.11-	386	M 157.980/_.981

CL629 ▶

< CL629

MERCEDES				
E-Class T-Model (S212)	E 63 AMG	02.11-	410	M 157.981
	E 63 AMG	02.13-	430	M 157.981
	E 63 AMG 4-matic	02.13-	430	M 157.981
	E 63 AMG 4-matic	02.11-	410	M 157.981
G-Class (W463)	G 63 AMG	05.12-	400	M 157.980
GL-Class (X166)	GL 500 4-matic	07.12-	320	M 278.928
	GL 63 AMG 4-matic	07.12-	410	M 157.982
GLK-Class (X204)	350 4-matic	06.08-	225	M 276.957
M-Class (W166)	ML 350 4-matic	06.11-	225	M 276.955
	ML 500 4-matic	02.12-	300	M 278.928
	ML 63 AMG 4-matic	11.11-	410	M 157.982
	ML 63 AMG 4-matic	11.11-	386	M 157.980
R-Class (W251, V251)	R 350 CGI 4-matic	01.06-	225	M 276.958
S-Class (W221)	S 500 CGI 4-matic	03.11-	320	M 278.932
	S 500 CGI	04.11-	320	M 278.932
	S 63 AMG	02.12-	420	M 157.980
	S 63 AMG	03.11-	400	M 157.980
S-Class Coupe (C216)	CL 500	02.11-	320	M 278.920
	CL 500 4-matic	02.11-	320	M 278.920
	CL 63 AMG	02.11-	400	M 157.980
	CL 63 AMG	01.10-	420	M 157.980
SL (R231)	350	02.12-	225	M 276.954
	500	01.12-	320	M 278.927
	63 AMG	01.12-	395	M 157.983
	63 AMG	01.12-	415	M 157.983
SLK (R172)	350	02.11-	225	M 276.956
	55 AMG	01.12-	310	M 152.980

CL700

SAE

OEM-No.
ROVER GCL 201
NEC100630

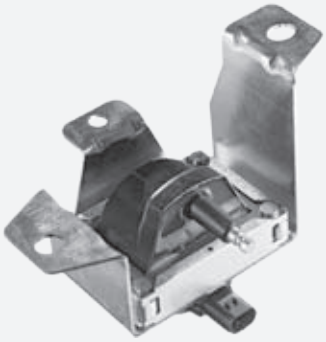

MG				
MG TF	115	03.02-12.09	85	16 K4F
	120	03.02-12.09	88	18 K4F
	135	03.02-12.09	100	18 K4F
MG ZR	105	06.01-04.05	76	14 K4F
	120	06.01-04.05	86	18 K4F
MGF (RD)	1.8 i 16V	03.95-03.02	88	18 K4F
ROVER				
100 / Metro (XP)	111 C/L/S	03.90-12.98	44	11 K2D/11 K2A
	114 S/L/GTA	03.90-12.98	55	14 K2D/14 K2A
100 Cabriolet (XP)	111	04.94-10.97	44	11 K2D
	114	04.94-10.97	55	14 K2D/14 K2A
200 (RF)	211	01.98-03.00	44	11 K2D
	214 i	11.95-03.00	55	14 K2F
	214 Si	11.95-03.00	76	14 K4F
	216 Si	11.95-03.00	82	16 K4F
25 (RF)	1.4 16V	10.99-05.05	62	14 K4M
	1.4 16V	10.99-05.05	76	14 K4F
	1.6 16V	10.99-05.05	80	16 K4F
	1.8 16V	10.99-05.05	85	18 K4F
400 (RT)	414 Si	05.95-03.00	76	14 K4F
	416 Si	05.95-03.00	82	16 K4F
	416 Si	05.95-03.00	83	D 16 Y2
400 Hatchback (RT)	414	03.96-12.97	55	14 K2F
	414 Si	05.95-03.00	76	14 K4F
	416 Si	05.95-03.00	82	16 K4F
	416 Si	06.95-03.00	83	D 16 Y2

< CL700

ROVER				
400 Tourer (XW)	1.6 i	05.94-11.98	82	D 16 Z2
	1.6 i	05.94-11.98	90	D 16 A8
Cabriolet (XW)	216 1.6i 16V	01.96-11.99	82	16 K4F
Coupe	1.6 16 V	03.96-11.99	82	16 K4F

CL702

OEM-No.
LANDROVER NEC 000070
NEC 000070 L
NEC 000110 L
ROVER NEC000070
NEC000110

1 coil per cylinder

LANDROVER				
Freelander (LN)	2.5 V6 4x4	11.00-10.06	130	25 K4F
MG				
MG ZT	160	06.01-07.05	118	25 K4F
	180	01.03-07.05	130	25 K4F
	190	06.01-07.05	140	25 K4F
MG ZT-T	160	10.01-07.05	118	25 K4F
	180	01.03-07.05	130	25 K4F
	190	10.01-07.05	140	25 K4F
ROVER				
75 (RJ)	2.0 V6	04.03-05.05	110	20 K4F
	2.5 V6	04.99-10.01	129	KV 6
	2.5 V6	04.03-05.05	130	25 K4F
75 Tourer (RJ)	2.0 V6	08.01-05.05	110	20 K4F
	2.5 V6	04.03-05.05	130	KV 6

CL705

OEM-No.
SAAB 55559955
55562588
9197559

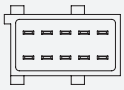

SAAB				
9-3 (YS3D)	2.0 i	02.98-09.02	96	B204I
	2.0 SE Turbo	02.98-09.02	147	B204R
	2.0 Turbo	01.01-09.02	110	B205E
	2.0 Turbo	10.98-09.02	113	B204E
	2.3 i	02.98-09.02	110	B234I
	2.3 Turbo	10.98-09.02	165	B235R
9-3 Cabriolet (YS3D)	2.0 i	02.98-08.03	96	B204I
	2.0 SE Turbo	02.98-08.03	147	B204R
	2.0 Turbo	01.01-08.03	110	B205E
	2.0 Turbo	10.98-08.03	113	B204E
	2.0 Turbo	02.98-08.03	136	B205L/B204L
	2.3 i	02.98-08.03	110	B234I
	2.3 Turbo	10.99-08.03	165	B235R
9-5 (YS3E)	2.0 T	09.97-	110	B205E
	2.0 T	07.00-	136	B205L
	2.3 T	09.97-	125	B235E
	2.3 T	01.01-	136	B235E
	2.3 Turbo	07.03-	162	B235L

< CL705

SAAB				
9-5 (YS3E)	2.3 Turbo	10.99-09.01	169	B235R
	2.3 Turbo	09.01-	184	B235R
	2.3 Turbo	11.05-	191	B235R
9-5 Combi (YS3E)	2.0 T	10.98-	110	B205E
	2.0 T	07.00-07.01	136	B205L
	2.0 T	10.98-	141	B204R
	2.3 T	10.98-	125	B235E
	2.3 T	01.01-	136	B235E
	2.3 T BioPower	11.06-	154	B235R
	2.3 Turbo	07.03-	162	B235L
	2.3 Turbo	10.99-09.01	169	B235R
	2.3 Turbo	09.01-	184	B235R
	2.3 Turbo	01.06-	191	B235R

CL706

SAE

OEM-No.
CHRYSLER 04609103AB
05269670
05269670AB
56032521
56032521AB

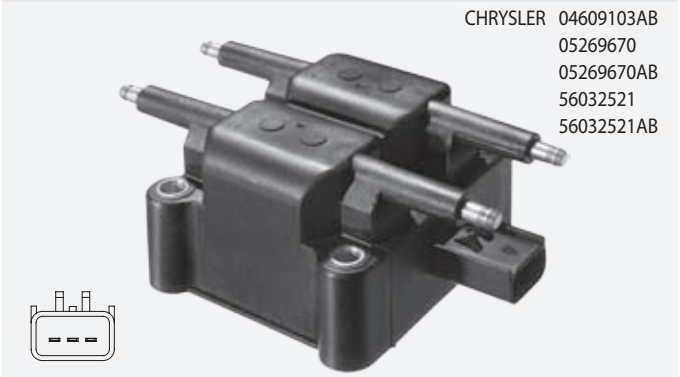

CHRYSLER				
Neon II	2.0 16V R/T	10.01-12.06	110	ECH
PT Cruiser (PT_)	1.6	11.01-12.10	85	EJD
	2.0	10.04-12.10	100	ECC
	2.0	06.00-12.10	104	ECC
	2.4	08.05-12.10	105	EDZ
	2.4	06.00-12.10	110	EDZ
PT Cruiser Cabriolet	2.4	03.04-03.08	105	EDZ
Sebring (JR)	2.0	04.01-06.07	104	ECC
Sebring Cabriolet	2.0	04.01-06.07	104	ECC
Stratus (JA)	2.0 LE	12.95-04.01	96	C00
Stratus Cabriolet	2.0 LE	06.96-04.01	96	420X
Voyager III (GS)	2.4 i	01.95-03.01	111	B00
Voyager IV (RG, RS)	2.4	02.00-12.08	108	EDZ
JEEP				
Cherokee (KJ)	2.4 4x4	09.01-01.08	108	ED1
MINI				
Mini (R50, R53)	1.4	04.03-09.06	55	
	1.6 Cooper	06.01-09.06	85	W10 B16 A
	1.6 Cooper S	03.02-09.06	120	W11 B16 A
	1.6 Cooper S	07.04-09.06	125	W11 B16 A
	1.6 One	06.01-09.06	66	W10 B16 A
	1.6 Works	11.03-09.06	155	W11 B16 A
Mini Cabriolet (R52)	1.6 Cooper	07.04-11.07	85	W10 B16 A
	1.6 Cooper S	07.04-11.07	125	W11 B16 A
	1.6 Cooper Works	07.04-11.07	155	W11 B16 A
	1.6 One	07.04-11.07	66	W10 B16 A

CL707

PIN

OEM-No.
VOLVO 1275602

semidirect - 2 coils and ignition lead set T382B

VOLVO				
S40 I (VS)	1.6	03.99-12.03	80	B 4164 S2
	1.8	07.95-08.99	85	B 4184 S_
	1.8	03.99-12.03	90	B 4184 S_
	1.8 i	06.01-12.03	90	B 4184 SJ
	1.9 T4	05.97-07.00	147	B 4194 T_
	2.0	07.95-12.03	100	B 4204 S_
	2.0 T	10.97-12.03	118	B 4204 T
	2.0 T	06.01-12.03	120	B 4204 T3
	2.0 T	07.00-06.01	121	B 4204 T_
	2.0 T4	07.00-12.03	147	B 4204 T5
V40 Combi (VW)	1.6	03.99-06.04	80	B 4164 S2
	1.8	07.95-08.99	85	B 4184 S_
	1.8	03.99-06.04	90	B 4184 S_
	1.8 i	06.01-06.04	90	B 4184 SJ
	1.9 T4	05.97-07.00	147	B 4194 T
	2.0	07.95-06.04	100	B 4204 S_
	2.0 T	10.97-07.00	118	B 4204 T
	2.0 T	06.01-06.04	120	B 4204 T3
	2.0 T4	07.00-06.04	147	B 4204 T5

CL708

DIN

OEM-No.
ROVER NEC000130
NEC100870

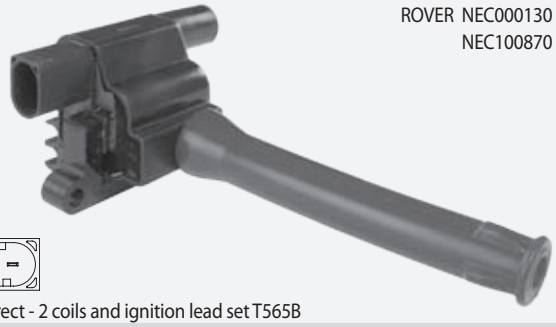

semidirect - 2 coils and ignition lead set T565B

MG				
MG TF	160	03.02-12.09	118	18 K4K
MG ZR	160	06.01-04.05	118	18 K4K
MGF (RD)	1.8 i VVC	03.95-03.02	107	18 K4K
	1,8 i VVC	10.01-03.02	118	18 K4K
ROVER				
200 (RF)	218 K Vi	11.95-03.00	107	18 K4K
25 (RF)	1.8 16V	10.99-05.05	85	18 K4F
	1.8 16V	02.00-05.05	107	18 K4K
400 Tourer (XW)	1.8 i	06.96-11.98	107	18 K4K
45 (RT)	1.8	02.00-05.05	86	18 K4F
45 Sedan (RT)	1.8	02.00-05.05	86	18 K4F

CL709

OEM-No.
CHRYSLER 56028138
56028138AB
56028138AD
56028138AE
56028138AF

1 coil per cylinder

JEEP

Commander (XK)	3.7 V6 4x4	09.05-12.10	157	EKG
	4.7 V8 4x4	09.05-12.10	170	EVA
Grand Cherokee II	4.7 V8	10.04-09.05	167	EVA
	4.7 V8 4x4	04.99-08.00	162	EVA
	4.7 V8 4x4	04.99-09.05	164	EVA
	4.7 V8 4x4	06.03-09.05	167	EVA
	4.7 V8 4x4	10.01-09.05	190	EVC
Grand Cherokee III	3.7 V6 4x4	06.05-12.10	157	EKG
	4.7 V8 4x4	06.05-12.10	170	EVA
Cherokee (KJ)	3.7 4x4	09.01-01.08	155	EKG
	3.7 4x4	08.03-01.08	150	EKG
	3.7 Laredo	10.01-09.04	150	EKG
Cherokee (KK)	3.7 V6 4x4	01.08-	151	EKG

CL710

OEM-No.
SAAB 9178955
55561132

SAAB

900 II	2.0 -16 Turbo	07.93-02.98	136	B204L
	2.0 i	08.94-02.98	96	B204I
900 II Cabriolet	2.0 -16 Turbo	12.93-02.98	136	B204L
	2.0 i	12.93-02.98	96	B204I
900 II Coupe	2.0 -16 Turbo	12.93-02.98	136	B204L
	2.0 i	08.94-02.98	96	B204I
	2.0 i	12.93-07.94	98	B206I
9000	2.0 -16	01.89-01.93	94	B202I
	2.0 -16 CD	09.93-12.98	96	B202I/B204I
	2.0 -16 CD	09.93-12.98	110	B204S/_E/B202S
	2.0 -16 Turbo	05.88-08.93	118	B202XL
	2.0 -16 Turbo	04.85-12.91	129	B202XL
	2.0 -16 Turbo CD	09.92-12.98	108	B204E/B202S
	2.0 -16 Turbo CD	09.88-08.93	120	B202XL
	2.0 -16 Turbo CD	09.89-12.98	136	B202L
	2.3 -16 CD	08.89-12.98	107	B234I
	2.3 -16 CD Turbo	07.90-12.98	147	B234L
	2.3 -16 CDE	09.93-12.98	108	B234I
	2.3 -16 CDE Eco	09.93-12.98	125	B234E
	2.3 -16 Turbo	09.90-08.93	143	B234L
9000 CC	2.0 -16	12.85-12.88	92	B202XI
	2.0 -16	12.85-08.88	94	B202XI
	2.0 -16 CS	01.89-12.98	94	B202I
	2.0 -16 CS	09.93-12.98	96	B204I
	2.0 -16 ND Turbo	09.93-12.98	110	B204S/_E/B202S
	2.0 -16 Turbo	09.84-08.93	118	B202XL
	2.0 -16 Turbo	05.88-08.93	120	B202XL
	2.0 -16 Turbo	09.84-12.91	129	B202XL/B202L
	2.0 -16 Turbo CS	09.88-12.98	136	B202L
	2.3 -16 Aero CS	02.93-12.98	162	B234R

< CL710

SAAB

9000 CC	2.3 -16 Aero CS	02.93-12.98	165	B234R
	2.3 -16 CS	09.89-12.98	107	B234I
	2.3 -16 CSE	09.93-12.98	108	B234I
	2.3 -16 CSE Eco	09.93-12.98	125	B234E
	2.3 -16 Turbo	09.90-12.98	143	B234L
	2.3 -16 Turbo CSE	09.93-12.98	147	B234L
9-3 (YS3D)	2.0 Turbo	10.98-09.02	113	B204E
	2.0 Turbo	02.98-09.02	136	B205L/B204L
	2.0 Turbo	10.99-09.02	151	B205R
	2.3 i	02.98-09.02	110	B234I
	2.3 Turbo	10.98-09.02	165	B235R
9-3 (YS3F)	1.8 i	01.04-	90	Z18 XE
	1.8 T	09.02-	110	B207E
	1.8 T BioPower	05.09-	129	B207L
	2.0 T	09.02-	129	B207L
	2.0 T	09.02-	154	B207R
	2.0 T	05.09-	177	B207R
	2.0 T BioPower	01.07-	129	B207L
	2.0 T BioPower	05.09-	147	B207M
	2.0 T BioPow. XWD	01.08-	120	B207H
	2.0 T XWD	01.07-	120	B207G
9-3 Combi (YS3F)	1.8 i	03.05-	90	Z18 XE
	2.0 T	03.05-	110	B207E
	2.0 T	03.05-	129	B207L
	2.0 T	02.09-	147	B207M
	2.0 T	03.05-	154	B207R
	2.0 T BioPower	01.07-	129	B207L
	2.0 T Bio Power	02.09-	147	B207M

CL711

DIN

OEM-No.
LANDROVER NEC000120L
ROVER NEC000120
NEC100730
NEC100730L

semidirect - 2 coils and ignition lead set T565B

LANDROVER

Freelander (LN)	1.8 16V 4x4	11.00-10.06	86	18 K4F
Freelander Soft Top	1.8 i 16V 4x4	02.98-10.06	88	18 K4F

MG

MG TF	115	03.02-12.09	85	16 K4F
	120	03.02-12.09	88	18 K4F
	135	03.02-12.09	100	18 K4F
MG ZR	105	06.01-04.05	76	14 K4F
	120	06.01-04.05	86	18 K4F
MG ZS	120	07.01-04.05	86	18 K4F
MG ZS Hatchback	120	07.01-10.05	86	18 K4F
MGF (RD)	1.8 i 16V	03.95-03.02	88	18 K4F

ROVER

200 (RF)	214 Si	11.95-03.00	76	14 K4F
	216 Si	11.95-03.00	82	16 K4F
25 (RF)	1.4 16V	10.99-05.05	62	14 K4M
	1.4 16V	10.99-05.05	76	14 K4F
	1.6 16V	10.99-05.05	80	16 K4F
45 (RT)	1.4	02.00-05.05	76	14 K4F
	1.6	02.00-05.05	80	16 K4F
	2.0 V6	02.00-05.05	110	20 K4F
45 Sedan (RT)	1.4	02.00-05.05	76	14 K4F
	1.6	02.00-05.05	80	16 K4F
	2.0 V6	02.00-05.05	110	20 K4F
75 (RJ)	1.8	02.99-05.05	88	K 1.8
	1.8 Turbo	05.03-05.05	110	18 K4G

< CL711

ROVER				
75 Tourer (RJ)	1.8	08.01-05.05	88	K 1.8
	1.8 Turbo	05.03-05.05	110	18 K4G
Cabriolet (XW)	214 1.4i 16V	01.93-11.99	76	14 K4F

CL712

SAE

OEM-No.
CHRYSLER 4797293
5234210
5234610
5252577
53008068
GM 19017110

CHRYSLER				
Daytona Coupe	2.2 i Turbo	09.86-12.90	130	EDR
	2.5 i Turbo	01.89-10.92	110	EDT
Voyager II (ES)	2.5 i	08.90-09.95	74	K
JEEP				
Grand Cherokee I	4.0 i 4x4 (Z)	10.95-12.97	130	S01
	4.0 i 4x4 (ZJ)	09.91-12.97	132	ERH
	4.0 i 4x4 (ZJ)	09.91-12.97	135	MX
	4.0 Laredo	10.96-12.97	131	ERH
	5.2	10.96-12.97	164	ELF
	5.2 4x4	10.96-12.97	164	ELF
	5.2 4x4 (Z)	10.95-12.97	156	Y01
	5.2 i 4x4 (ZJ)	01.92-04.99	155	ELF
	5.2 i 4x4 (ZJ)	09.92-04.99	158	Y
	5.2 Limited 4x4	10.96-12.97	136	ELF
Cherokee (XJ)	2.5	10.95-12.97	89	EPE
	2.5	10.90-09.96	89	EPE
	2.5	10.86-09.90	90	EPE
	2.5 4x4	10.86-09.90	90	EPE
	2.5 i 4x4	10.84-12.97	87	EPE
	2.5 i 4x4	12.91-12.97	90	EPE/HX
	2.5 SE	10.96-12.97	87	EPE
	4.0 i	07.98-09.01	127	
	4.0 i	12.91-09.01	135	MX
	4.0 i	02.99-09.01	135	MX
	4.0 i	01.88-09.01	136	ERH
	4.0 i 4x4	01.95-09.01	131	ERH
Wrangler I (YJ, SJ_)	2.5	12.91-08.96	89	EPE
	4.0	12.91-08.96	131	ERH
Wrangler II (TJ)	2.5	08.96-12.97	87	P00
	4.0	08.96-12.97	130	S01

CL713

SAE

OEM-No.
CHRYSLER 56028172
56028172AB
00K56028172AC

JEEP				
Grand Cherokee I	4.0 i 4x4 (Z)	01.98-04.99	130	S01
	4.0 i 4x4 (ZJ)	01.98-04.99	132	ERH
	4.0 i 4x4 (ZJ)	01.98-04.99	135	MX
	4.0 Laredo	01.98-09.98	131	ERH
	5.2	01.98-09.98	164	ELF
	5.2 4x4	01.98-09.98	164	ELF
	5.2 4x4 (Z)	01.98-04.99	156	Y01

< CL713

JEEP				
Grand Cherokee I	5.2 Limited 4x4	01.98-09.98	136	ELF
	5.9 i 4x4	08.97-04.99	177	
Cherokee (XJ)	2.5	01.98-09.01	89	EPE
	2.5 i 4x4	01.98-09.01	87	EPE
	2.5 i 4x4	01.98-09.01	90	EPE/HX
	2.5 SE	01.98-09.99	87	EPE
Wrangler II (TJ)	2.5	01.98-04.07	87	P00
	4.0	06.98-04.07	124	
	4.0	01.98-04.07	130	S01
	4.0 Rubicon	08.03-04.07	128	

CL716

DIN

OEM-No.
HONDA 30520-PH7-006
30520-PH7-016
ROVER GCL145
GCL146

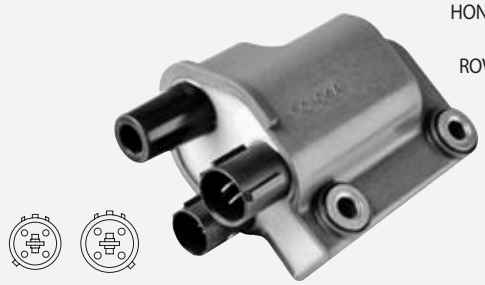

HONDA				
Legend I (HS, KA)	2.5 i	01.86-12.87	110	C25A1
	2.5 i	02.87-06.88	127	C25A2
	2.7 i 24V	01.88-12.90	124	C27A1
Legend I Coupe	2.7 i 24V	10.87-12.90	124	C27A1
ROVER				
800 (XS)	827 SI/Sterling	02.88-12.91	130	C27 A2
	827 SI/Sterling cat	02.88-02.99	124	C27 A1
800 Coupe	827 24V (RS)	08.92-02.99	124	C27 A1
800 Hatchback	827 24V I/SI cat	01.92-02.99	124	C27 A1
	827 Vitesse cat	10.88-12.91	124	C27 A1
	827 Vitesse/SLI	10.88-12.91	130	C27 A2

CL718

OEM-No.
CHRYSLER 56029129AA
56029129AB
56029129AF

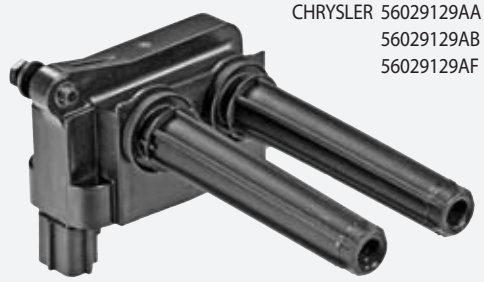

1 coil per cylinder

CHRYSLER				
300 C (LX)	5.7	01.06-12.08	250	EZH/EZD/EZB
	6.1 SRT8	06.05-11.12	317	ESF
300 C Touring	5.7	01.06-12.10	250	EZH/EZD/EZB
	5.7 AWD	04.05-12.10	250	EZH/EZB
	6.1 SRT8	06.05-12.10	317	ESF
JEEP				
Commander (XK)	5.7 V8 4x4	09.05-12.10	240	EZB
Grand Cherokee III	5.7 V8 4x4	01.06-12.10	240	EZB
	6.1 SRT8 4x4	03.06-12.10	313	ESF

CL719

OEM-No.
VOLVO 1275971
9146776

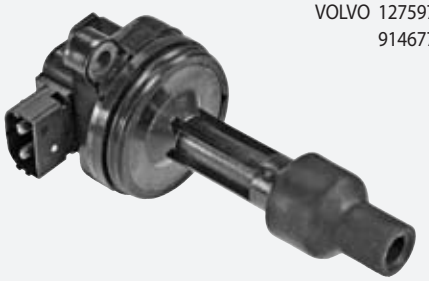

1 coil per cylinder

VOLVO				
940 (944)	2.0 Turbo	08.90-12.94	114	B 200 FT
940 II (944)	2.0 Turbo	04.96-10.98	114	B 200 FT
940 II Combi (945)	2.0 Turbo	04.96-10.98	114	B 200 FT
960 (964)	2.9	08.90-07.94	150	B 6304 F/B 6304G
960 Combi (965)	2.9	08.90-07.94	150	B 6304 F/B 6304S
960 II (964)	2.5	07.94-12.96	125	B 6254 S
	2.9	07.94-12.96	150	B 6304 S
960 II Combi (965)	2.5	08.94-12.96	125	B 6254 S
	2.9	09.94-12.96	150	B 6304 S
S90	2.9	01.97-05.98	132	B 6304 S2
	2.9	01.97-05.98	150	B 6304 G
V90 Combi	2.9	01.97-12.98	132	B 6304 S2
	2.9	01.97-12.98	150	B 6304 G

CL720

OEM-No.
CHRYSLER 04609088AC
04609088AD
04609088AF
4609088AC
4609088AD

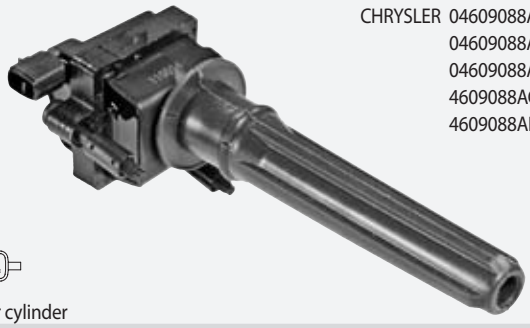

1 coil per cylinder

CHRYSLER				
300 C (LX)	3.5	09.04-12.05	183	3.5CSP
300 C Touring	3.5	09.04-12.05	183	3.5CSP/EEG
	3.5 AWD	09.04-12.05	183	3.5CSP
300 M (LR)	3.5 V6 24V	08.00-09.04	185	EGG
	3.5 V6 24V	07.98-08.00	187	EGG
Concorde	3.5 LX	10.97-09.03	174	EWZ
	3.5 LX Super	10.97-09.03	186	EWZ

CL721

OEM-No.
CHRYSLER 4606869AA
4606869AB

1 coil per cylinder

CHRYSLER				
300 C (LX)	2.7	01.07-11.12	130	EES
	2.7	01.06-11.12	142	FX/EER
	3.5	01.06-11.12	183	CSP
300 C Touring	2.7	01.07-12.10	130	EES
	2.7	01.06-12.10	142	FX/EER
	3.5	01.06-12.10	183	CSP/EEG
	3.5 AWD	01.06-12.10	183	CSP

< CL721

CHRYSLER				
Sebring Cabriolet (JS)	2.7	07.07-12.10	137	EER
FIAT				
Freemont (JF_)	3.6	08.11-	206	ERB
	3.6 4x4	08.11-	206	ERB

CL722

OEM-No.
CHRYSLER 4609095AB
4609095AC
4609095AD
4609095AE
4609095AF

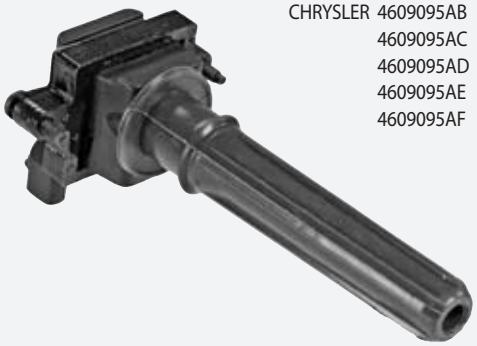

1 coil per cylinder

CHRYSLER				
300 C (LX)	2.7	09.04-12.05	142	FX/EER
300 C Touring	2.7	09.04-12.05	142	FX/EER
300 M (LR)	2.7 V6 24V	11.98-08.00	149	EER
	2.7 V6 24V	08.00-09.04	150	EER
Concorde	2.7 LX	10.97-09.03	149	EER
Sebring (JR)	2.7 V6 24V	04.01-06.07	149	EER/EES
Sebring Cabriolet	2.7 V6 24V	04.01-06.07	149	EES

CL723

OEM-No.
LANDROVER LR002954
VOLVO 30684245
30684245-0

1 coil per cylinder

LANDROVER				
Freelander 2 (FA_)	3.2 4x4	10.06-10.14	171	B 6324 S
VOLVO				
S60 II	3.0 T6 AWD	04.10-	224	B 6304 T4
S80 II (AS)	3.0 T6 AWD	10.10-	224	B 6304 T4
	3.2	03.06-	175	B 6324 S
	3.2 AWD	01.07-	175	B 6324 S
V60	3.0 T6 AWD	09.10-	224	B 6304 T4
V70 III (BW)	3.2	08.07-	175	B 6324 S
	3.0 T6 AWD	04.11-	224	B 6304 T4
	3.2 AWD	08.07-	175	B 6324 S
XC60	3.0 T6 AWD	03.10-	224	B 6304 T4
	3.2 AWD	07.09-	175	B 6324 S
XC70 II	3.2 AWD	08.07-	175	B 6324 S
	3.0 T6 AWD	01.10-	224	B 6304 T4
XC90 I	3.2 AWD	05.06-	175	B 6324 S

CL800

OEM-No.
LADA 21120370501010
2112-3705010-10

1 coil per cylinder

LADA (VAZ)				
110	1.6 16V	10.04-12.10	67	VAZ-21124
Granta (2190)	1.6	10.11-	72	VAZ-21126
	1.6	07.13-	78	VAZ-21127
Kalina Hatch. (1119)	1.4 16V	11.08-	66	VAZ-11194
	1.4 16V LPG	11.08-	65	VAZ-11194
	1.6 16V	10.04-	66	
Kalina Hatch. (2192)	1.6	06.13-	78	VAZ-21127
Kalina Combi (1117)	1.4 16V	11.08-	66	VAZ-11194
	1.4 16V LPG	11.08-	65	VAZ-11194
Kalina Combi (2194)	1.6	11.13-	78	VAZ-21127
Kalina Sedan (1118)	1.4 16V	11.08-	66	VAZ-11194
	1.4 16V LPG	11.08-	65	VAZ-11194
	1.6 16V	10.04-	66	
Priora CC (2172)	1.6	12.08-	72	VAZ-21126
	1.6	02.14-	78	VAZ-21127
	1.6 LPG	12.08-	71	VAZ-21126
Priora Combi (2171)	1.6	10.09-	60	VAZ-21703
	1.6	10.09-	72	VAZ-21126
	1.6	02.14-	78	VAZ-21127
Priora Sedan (2170)	1.6	12.08-	72	VAZ-21126
	1.6	02.14-	78	VAZ-21127
	1.6 LPG	03.09-	71	

CL801

PIN
OEM-No.
LADA 2112-3705010-02
2112-3705010-03
2112-3705010-07

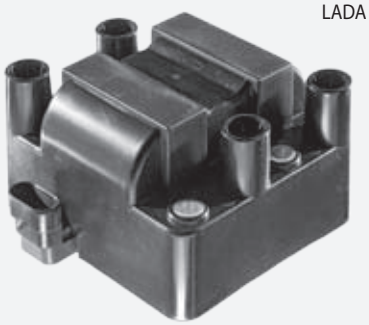

GAZ				
Gazelle Bus	2.3	10.93-08.01	96	ZMZ-4062.10
Gazelle Flatbed	2.4	10.93-08.01	66	ZMZ-402.10
Gazelle Van	2.4	10.93-08.01	66	ZMZ-402.10
LADA (VAZ)				
110	1.5	01.95-	57	VAZ-2111
	1.5 16V	10.00-	67	VAZ-2112
111	1.5	01.96-	57	VAZ-2111
	1.5 16V	10.00-	67	VAZ-2112
112	1.5	01.95-	57	VAZ-2111
	1.5 16V	10.00-	67	VAZ-2112
2107	1.7	06.02-	59	VAZ-2121.3
Nadezhda (2120)	1.7 i	12.97-	59	VAZ-21214
Samara (2109)	1.5	04.96-	57	VAZ-2111

CL802

PIN
OEM-No.
LADA 21110-3705010
21110-3705010-03
21113705010
21113745010

LADA (VAZ)				
110	1.6	01.00-	60	VAZ-21114
	1.6 LPG	10.04-03.07	60	VAZ-21114
111	1.6	01.05-	60	VAZ-21114
	1.6	03.06-	66	VAZ-21124
112	1.6	01.05-	60	VAZ-21114
Granta (2190)	1.6	10.11-	60	VAZ-11183
	1.6	10.11-	64	VAZ-11186
Granta (2349)	1.6	10.11-	64	VAZ-11186
Kalina Hatch. (1119)	1.6	10.04-	60	VAZ-21114
Kalina Combi (1117)	1.6	10.04-	60	VAZ-21114
Kalina Sedan (1118)	1.6	10.04-	60	VAZ-21124
Niva (2121)	1700 i	06.96-	59	VAZ-21214
	1700 i 4x4	09.10-	61	VAZ-21214
	1700 i 4x4	10.00-	60	VAZ-21214
Niva II (2123)	1.7	08.04-	61	VAZ-21214
	1.7	09.02-	59	VAZ-21214
	1.7 LPG	09.02-	57	VAZ-21214
Priora CC (2172)	1.6	12.08-	60	VAZ-21703
Priora Sedan (2170)	1.6	12.08-	60	VAZ-21703

CL803

PIN
OEM-No.
CHERY A113705110EA

GEELY				
BL Coupe	1.3	09.05-	63	MR479Q
	1.5	09.05-	69	MR479QA
CK Sedan	1.6	09.05-	79	MR481QA

CL900

OEM-No.
NISSAN 22448-1KC0A
RENAULT 22448-1KC0A

1 coil per cylinder

NISSAN				
Juke (F15)	1.6 DIG-T	06.10-	140	MR16DDT
	1.6 DIG-T 4x4	06.10-	140	MR16DDT
	1.6 DIG-T Nismo	11.12-	147	MR16DDT
	1.6 DIG-T Nis. 4x4	02.13-	147	MR16DDT
Pulsar CC (C13)	1.6 DIG-T	02.15-	140	MR16DDT
RENAULT				
Clio IV	1.6 RS	03.13-	147	M5M 450/M5M 400

CL901

DIN

OEM-No.
HYUNDAI 27301-23900
KIA 27301-23900

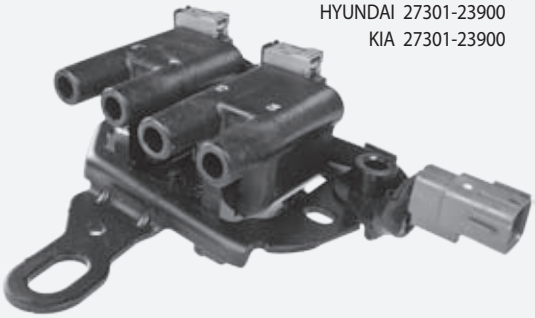

HYUNDAI				
i30 (FD)	2.0	10.07-11.11	105	G4GC-G/G4GC
KIA				
Cee'd CC (ED)	2.0	12.06-	105	G4GC
Cee'd SW (ED)	2.0	09.07-	105	G4GC
Pro Cee'd (ED)	2.0 LPG	01.09-12.09	105	G4GC

CL902

OEM-No.
HYUNDAI 27300-3F100
KIA 27300-3F100

1 coil per cylinder

HYUNDAI				
Equus / Centennial	4.5	10.99-09.03	195	8A80
	4.6 V8	03.09-	269	G8BA
	4.6 V8	03.09-	274	G8BA
	5.0 GDi	03.09-	316	G8BE
Genesis Coupe	2.0 T	01.08-	157	G4KF
	2.0 T	04.12-	204	G4KF
Santa Fé III (DM)	2.4	09.12-	141	G4KJ
	2.4 4WD	09.12-	141	G4KJ
Sonata VI (YF)	2.0	01.09-	110	G4KD
	2.4	01.09-	131	G4KC
	2.4	01.09-	128	G4KC

< CL902

KIA				
Cerato II Sedan (TD)	2.0	01.09-	115	G4KD
Magentis (MG)	2.0	07.09-	121	G4KD
Optima	2.0	03.12-	125	G4KD
	2.0	09.10-	204	
	2.0 CVVL	03.12-	121	G4KD
Sorento II (XM)	2.4 CVVT	10.12-	141	G4KJ
	2.4 CVVT 4WD	10.12-	141	G4KJ
Sportage (SL)	2.0 CVVT	07.10-	120	G4KD
	2.0 CVVT AWD	07.10-	120	G4KD

CL903

OEM-No.
HYUNDAI 27301-04000
KIA 27301-04000

1 coil per cylinder

HYUNDAI				
i10 (PA)	1.0	01.11-	51	G3LA
i10 (IA)	1.0	12.13-	49	G3LA
	1.0 LPG	02.14-	51	B3LA
KIA				
Picanto (TA)	1.0	05.11-	51	G3LA
	1.0 BiFuel	05.11-	60	B3LA

CL904

OEM-No.
HYUNDAI 27301-03110
KIA 27301-03110

1 coil per cylinder

HYUNDAI				
i10 (PA)	1.2	11.08-	57	G4LA
	1.2	04.11-	63	G4LA
i20 (PB, PBT)	1.2	09.08-	57	G4LA
i20 (GB)	1.2	11.14-	55	G4LA
	1.2	11.14-	62	G4LA
KIA				
Picanto (TA)	1.2	09.11-	63	G4LA
Rio III (UB)	1.25 CVVT	09.11-	63	G4LA
	1.25 LPG	09.11-	63	G4LA
Rio III Sedan (UB)	1.25 CVVT	10.11-	63	G4LA

CL905

OEM-No.
MAZDA ZJ20-18-100
ZJ20-18-100A

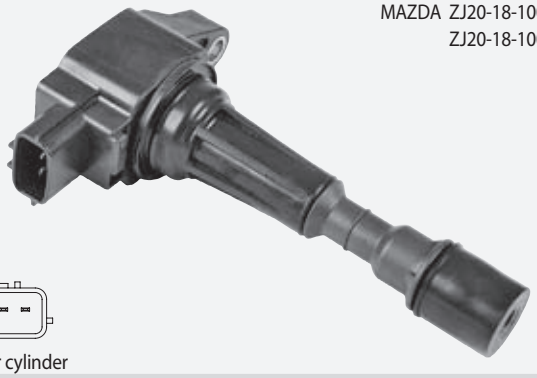

1 coil per cylinder

MAZDA				
2 (DE)	1.3	10.07-	55	ZJ-VE
	1.3	10.07-	63	ZJ-VE
	1.4 MZR-CD	01.08-	50	Y404
	1.5	10.07-	76	ZY-DE/ZY-VE
3 (BL)	1.6 MZR	06.09-	77	Z6
	1.6 MZR	01.10-12.13	79	Z6
	1.6 MZR CD	11.10-	85	Y655/Y650
3 (BM)	1.6	09.13-	77	Z6Y1
3 Sedan (BK)	1.6	02.04-	77	Z6
3 Sedan (BL)	1.6 MZR	06.09-	77	Z6
3 Sedan (BM)	1.6	09.13-	77	Z6Y3/Z6Y1

CL906

PIN

OEM-No.
MAZDA L81318100

MAZDA				
6 (GG)	1.8	08.02-08.07	88	L813
	2.0	06.02-08.07	104	LF18/LF17
	2.3	06.02-08.07	122	L3C1
6 Hatchback (GG)	1.8	08.02-08.07	88	L813
	2.0	08.02-08.07	104	LF18/LF17
	2.3	08.02-08.07	122	L3C1
6 Station Wagon (GY)	1.8	08.02-08.07	88	L813
	2.0	08.02-08.07	104	LF18/LF17
	2.3	08.02-08.07	122	L3C1
	2.3 AWD	11.02-08.07	119	L3C1
MPV II (LW)	2.3	07.02-02.06	104	L3

CL907

DIN

OEM-No.
DAIHATSU 90048-52083-000
90048-52088-000
90048-52094-000
MITSUBISHI MD309455

DAIHATSU				
Applause I (A1_)	1.6 16V	06.89-07.97	77	HD-E
	1.6 16V 4WD	06.89-07.97	77	HD-E
Feroza Hard Top	1.6 16V	06.92-12.99	63	HDC
	1.6 i 16V 4x4	01.90-12.99	70	HD-E
Feroza Soft Top	1.6 16V	06.92-12.99	63	HDC
	1.6 i 16V	06.90-12.99	70	HD-E
MITSUBISHI				
L 300 Bus	2.0 4WD	12.86-	65	4G63 (SOHC 8V)
	2.0 4WD	11.86-	66	4G63 (SOHC 8V)
L 300 Flatbed	2.0	07.94-04.00	85	4G63 (DOHC 16V)

CL908

OEM-No.
HYUNDAI 27301-3E400
KIA 27301-3E400

1 coil per cylinder

HYUNDAI				
Grandeur (TG)	2.7	05.06-	141	G6BA
i40 (VF)	2.0 GDI	03.12-	131	G4NC
Santa Fé II (CM)	2.7	01.07-	125	G6BA
	2.7 4x4	01.07-	125	G6BA
	2.7 V6 GLS	01.07-	139	G6EA
	2.7 V6 GLS 4x4	01.07-	139	G6EA
Sonata VI (YF)	2.0 i	01.11-	121	G4KD
KIA				
Carens IV	2.0	03.13-	130	G4NC

CL909

OEM-No.
HYUNDAI 27300-2E000

1 coil per cylinder

HYUNDAI				
i40 CW (VF)	2.0 GDI	07.11-	130	G4NC
Sonata V (NF)	2.0 VVTi GLS	05.05-	106	G4KA
	2.0 VVTi GLS	01.08-	121	G4KD

CL910

OEM-No.
MAZDA ZJ01-18-100A

1 coil per cylinder

MAZDA				
3 (BK)	1.4	10.03-06.09	62	ZJ-VE
	1.6	10.03-06.09	77	B6ZE

CL911

OEM-No.
NISSAN 22448-ED000
22448-EN200
22448-JA00A
22448-JA00C

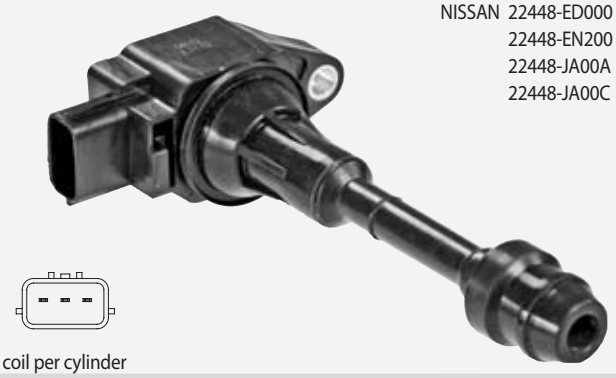

1 coil per cylinder

INFINITI				
FX	50 AWD	10.08-	287	VK50VE
	50 AWD	06.13-	309	VK50VE
NISSAN				
Juke (F15)	1.6	01.13-	69	HR16DE
Micra IV (K13)	1.2	05.10-	59	HR12DE
	1.2 DIG	04.11-	72	HR12DDR
Note (E12)	1.2	06.13-	59	HR12DE
Qashqai / Qashqai +2	1.6	11.10-	86	HR16DE
	2.0	02.07-	104	MR20DE
	2.0 Allrad	02.07-	104	MR20DE
X-Trail (T31)	2.5 4x4	06.07-	124	QR25DE
RENAULT				
Koleos (HY_)	2.5	09.08-	126	2TR700/_702/_703
	2.5 4x4	09.08-	126	2TR700/_702/_703

CL912

OEM-No.
NISSAN 22448-1KT0A

1 coil per cylinder

NISSAN				
Juke (F15)	1.6	06.10-	86	HR16DE
NV200 Evalia	1.6 16V	07.10-	81	HR16DE

CL913

OEM-No.
NISSAN 22448-4W011

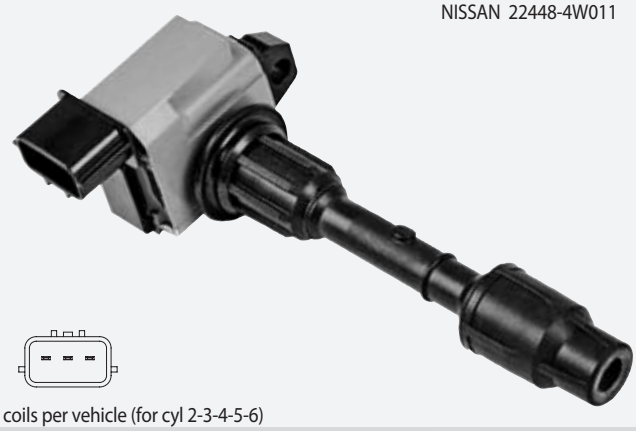

5 coils per vehicle (for cyl 2-3-4-5-6)

INFINITI				
QX4	3.3	01.97-	125	VG33E
NISSAN				
Pathfinder (R50)	3.3 V6 4WD	03.98-10.00	110	VG33E
	3.3 V6 4WD	-12.04	125	VG33E
	3.5 V6 4WD	11.00-12.01	162	VQ35

CL914

OEM-No.
NISSAN 22448-4W001

1 coil per vehicle (for cyl 1)

INFINITI				
QX4	3.3	01.97-	125	VG33E
NISSAN				
Pathfinder (R50)	3.3 V6 4WD	03.98-10.00	110	VG33E
	3.3 V6 4WD	09.97-12.04	125	VG33E
	3.5 V6 4WD	11.00-12.01	162	VQ35

CL915

OEM-No.
NISSAN 22448-8J110
22448-8J111
22448-8J115
22448-8J11C

1 coil per cylinder

NISSAN				
Murano (Z50)	3.5 4x4	08.03-	172	VQ35DE
Pathfinder (R50)	3.5 V6 4WD	01.03-12.04	162	VQ35
Pathfinder (R51)	4.0 4WD	09.05-	198	VQ40DE

CL916

OEM-No.
NISSAN 22448AR210
22448AR215

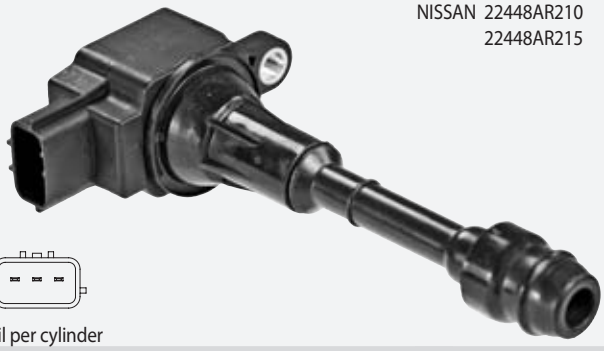

1 coil per cylinder

INFINITI				
FX	45	02.03-12.08	232	VK45DE
	45 Allrad	01.03-12.08	232	VK45DE
	45 Allrad	09.02-12.05	235	VK45DE
	45 Allrad	09.05-12.08	239	VK45DE
M45	4.5	09.06-12.10	242	VK45DE
	4.5X	09.07-12.10	242	VK45DE
	4.5	01.05-	250	VK45DE
	4.5X	09.07-12.08	250	VK45DE

CL917

OEM-No.
SUBARU 22433-AA451
22433-AA550

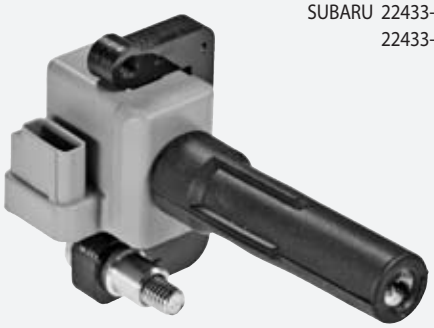

1 coil per cylinder

SUBARU				
Impreza CC	2.0 R AWD	01.08-	110	EJ204
Impreza Sedan (GD)	2.0 WRX STi AWD	11.01-	195	EJ207
	2.0 WRX Turbo	10.02-	160	EJ205
	2.0 WRX Turbo	12.02-	165	EJ205
Impreza Stat. Wagon	2.0 Turbo AWD	10.02-	160	EJ205
	2.0 WRX Turbo	12.02-	165	EJ205

CL919

DIN Ø5

OEM-No.
TOYOTA 90919-02217
90919-02218

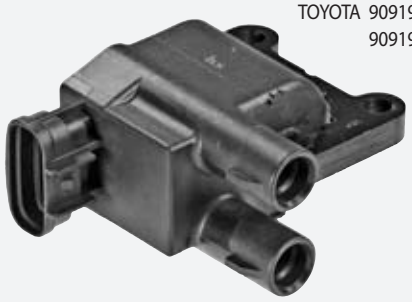

TOYOTA				
Avensis (T22)	2.0	09.97-10.00	94	3S-FE
Avensis Liftback (T22)	2.0	09.97-10.00	94	3S-FE
Avensis Station Wagon	2.0	09.97-10.00	94	3S-FE
Camry (CV2, XV2)	2.2	11.00-11.01	93	5S-FE
	2.2	08.96-11.01	96	5S-FE
Hiace IV Bus (LH1_)	2.7	04.98-08.01	105	3RZ-FE
	2.7	11.01-08.06	106	3RZ-FE
	2.7 4WD	04.98-08.01	105	3RZ-FE
Hiace IV Van	2.7	04.98-08.01	105	3RZ-FE
	2.7 4WD	04.98-08.01	106	3RZ-FE
Hilux II Pick-up	2.4 i 4WD	08.97-07.05	103	2RZ-FE
Picnic (_XM10)	2.0	01.01-12.01	90	3S-FE
	2.0 16V	05.96-12.01	94	3S-FE

CL920

OEM-No.
TOYOTA 90919-02251
90919-A2002
90919-A2004
LEXUS 90919-02255

1 coil per cylinder

LEXUS				
RX (_U3_)	350 AWD	02.06-12.08	203	2GR-FE
RX (_L1_ _)	350 AWD	12.08-	204	2GR-FE
	450h	12.08-	183	2GR-FXE
	450h AWD	12.08-	183	2GR-FXE

CL921

OEM-No.
TOYOTA 90919-02246
LEXUS 90919-02246

1 coil per cylinder

LEXUS				
RX (_U3_)	400h	09.05-12.08	155	3MZ-FE
	400h AWD	09.04-12.08	155	3MZ-FE

CL922

OEM-No.
DAIHATSU 90048-52126

1 coil per cylinder

DAIHATSU				
Cuore VI (L7_)	1.0 i	10.98-05.03	41	EJ-DE/EJ-VE
Sirion (M1)	1.0 i	04.98-09.00	41	EJ-DE
	1.0 i 4WD	04.99-09.00	41	EJ-DE

CL923

OEM-No.
SUZUKI 33400-50F20
33400-76G00
33400-76G01
33400-76G11

1 coil per cylinder

SUZUKI				
Alto (HA11)	1.0	09.94-09.98	39	G10BB
Alto (HA12, HA23)	1.0	01.00-06.02	43	G10BB
Wagon R+ (EM)	1.0	02.98-05.00	48	K10A

CL924

OEM-No.
TOYOTA 90919-02250
90919-02256
90919A2005

1 coil per cylinder

LEXUS				
ES (_ _V6_)	250	06.12-	135	2AR-FE
	300h	06.12-	118	2AR-FXE
GS (_ _S19_)	3.0	04.05-11.11	170	3GR-FE
	300	04.05-11.11	183	3GR-FSE
	350 AWD	05.08-11.11	232	2GR-FSE
	450h	02.06-11.11	218	2GR-FSE
	450h	02.06-11.11	254	2GR-FSE
GS (GRL1_, GWL1_)	250	01.12-	154	4GR-FSE
	350	01.12-	234	2GR-FSE
	300h	10.13-	133	2AR-FSE
	350 AWD	01.12-	234	2GR-FSE
GX (URJ15_)	460	11.09-	218	1UR-FE
IS II (GSE2_, ALE2_)	250	10.05-	153	4GR-FSE
	250 AWD	10.05-	153	4GR-FSE
IS III (GSE3_, AVE3_)	300h	04.13-	133	2AR-FSE
	250	04.13-	153	4GR-FSE
IS C (GSE2_)	250	04.09-	153	4GR-FSE
LS (UVF4_, USF4_)	460	05.08-	255	1UR-FE

< CL924

LEXUS				
LS (UVF4_, USF4_)	460	04.06-	280	1UR-FSE
	460	09.12-	285	1UR-FSE
	460 AWD	12.08-	270	1UR-FSE
	460 AWD	09.12-	272	1UR-FSE
	600h	08.07-	290	2UR-FSE
LX (URJ201)	570	11.07-	270	3UR-FE
RX (GYL1_, GGL15)	270	12.08-	138	1AR-FE
TOYOTA				
Camry Sedan (XV4)	2.5 VVTi	01.10-09.11	129	2AR-FE
Camry Sedan (_V5_)	2.5	09.11-	133	2AR-FE
Corolla Sedan (E15)	1.33	01.07-	74	1NR-FE
IQ	1.33	01.09-	72	1NR-FE
Land Cruiser (_J20_)	4.6 V8	09.10-	227	1UR-FE
	4.6 V8	01.12-	234	1UR-FE
Land Cruiser 150	4.0 V6 Dual VVTi	01.10-	205	1GR-FE
	4.0 V6 VVT-i	01.10-	207	1GR-FE
Mark X I (GRX12_)	2.5 VVTi	03.04-09.09	158	4GR-FSE
	2.5 VVTi 4WD	05.04-09.09	158	4GR-FSE
	3.0 VVTi	05.04-09.09	183	3GR-FSE
Urban Cruiser	1.33	04.10-	73	1NR-FE
	1.33	04.09-	74	1NR-FE
Verso S	1.33	11.10-	70	1NR-FE
	1.33	11.10-	73	1NR-FE
Yaris (_ _ _13_)	1.3	09.11-	70	1NR-FE
	1.3	09.11-	73	1NR-FKE/1NR-FE

CL925

OEM-No.
MITSUBISHI 1832A042
H006T11471
H6T11471

1 coil per cylinder

MITSUBISHI				
Lancer Sedan (CY/Z)	2.0 EVO 4WD	06.08-	217	4B11 T/C
Lancer Sportback	2.0 Ralliart 4WD	10.08-	177	4B11 T/C

CL926

OEM-No.
HYUNDAI 27301-2B100
KIA 27301-2B100

1 coil per cylinder

HYUNDAI				
i30 (GD)	1.6 GDI	12.11-	99	G4FD
i30 Coupe	1.6 GDI	05.13-	99	G4FD
i30 CW (GD)	1.6 GDI	06.12-	99	G4FD
i40 (VF)	1.6 GDI	03.12-	99	G4FD
i40 CW (VF)	1.6 GDI	07.11-	99	G4FD
ix35 (LM, EL, ELH)	1.6	11.10-	99	G4FD
Veloster (FS)	1.6 GDI	03.11-	103	G4FD
	1.6 T-GDI	10.12-	137	G4FJ

< CL926

KIA				
Carens IV	1.6	03.13-	99	G4FD
Cee'd	1.6 GDI	05.12-	99	G4FD
Cee'd Sportswagon	1.6 GDI	09.12-	99	G4FD
Pro Cee'd	1.6 GDI	03.13-	99	G4FD
Soul (AM)	1.6 GDI	06.11-	103	G4FD
Soul II (PS)	1.6 GDI	02.14-	97	G4FD
Sportage (SL)	1.6 GDI	02.11-	99	G4FD

CL927

OEM-No.
CITROEN 5970.96
MITSUBISHI 1832A016
PEUGEOT 5970.96

1 coil per cylinder

CITROEN				
C-Crosser (EP_)	2.4 16V	08.08-	125	SFZ (4B12-MMC)
C-Crosser Enteprise	2.4 16V	01.09-	125	4B12
MITSUBISHI				
ASX (GA_W_)	1.8	02.10-	102	4B10
Lancer Sedan (CY/Z)	1.8	05.10-	103	4B10
	1.8	02.08-	105	4B10
	1.8 BiFuel	02.10-	105	4B10
Lancer Sportback	1.8	03.09-	103	4B10
	1.8	06.08-	105	4B10
	1.8 BiFuel	02.10-	105	4B10
	1.8 Flex	03.09-	103	4B10
Outlander II (CW_W)	2.0	11.06-11.12	108	4B11
	2.4 4WD	09.07-11.12	125	4B12
PEUGEOT				
4007	2.4 16V	01.08-	125	

CL928

DIN Ø5

OEM-No.
MITSUBISHI MD314582

1 coil per vehicle (with coil CL598-2 pcs)

MITSUBISHI				
Pajero II	3.0 V6 24V	06.97-10.99	130	6G72 (SOHC 24V)
	3.0 V6 24V	06.94-05.97	133	6G72 (SOHC 24V)
	3.5 V6 24V	07.97-10.99	143	6G74 (DOHC/SOHC)
	3.5 V6 24V	06.94-10.99	153	6G74 (DOHC/SOHC)
Pajero II Canvas Top	3.0 V6 24V	06.94-04.00	133	6G72 (SOHC 24V)
Pajero Sport (K90)	3.0 V6	11.98-	130	6G72 (SOHC 24V)
	3.0 V6	06.00-	125	6G72 (SOHC 24V)

CL929

OEM-No.
MITSUBISHI MN195805
PSA 1607576780

1 coil per cylinder

CITROEN				
C4 AirCross	1.6	04.12-	86	4A92
MITSUBISHI				
ASX (GA_W_)	1.6	05.10-	85	4A92
	1.6	06.10-	86	4A92
Lancer Sedan (CY/Z)	1.5	06.08-	80	4A91
	1.5 BiFuel	02.10-	80	4A91
	1.6	05.10-	86	4A92
Lancer Sportback	1.5	06.08-	80	4A91
	1.5 BiFuel	03.10-	80	4A91
	1.6	05.10-	86	4A92
PEUGEOT				
4008	1.6	05.12-	86	4A92

CL930

OEM-No.
MITSUBISHI MR994643

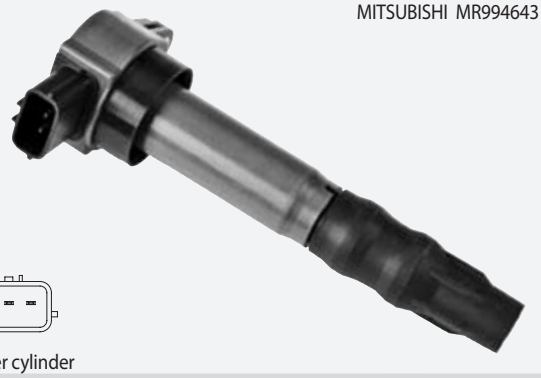

1 coil per cylinder

MITSUBISHI				
Galant Sedan	2.4	10.03-	116	4G69
Grandis (NA_W)	2.4	04.04-	121	4G69
Outlander I (CU_W)	2.4 4WD	11.03-10.06	118	4G69
	2.4 4WD	05.03-10.06	119	4G69

CL931

DIN Ø5

OEM-No.
MITSUBISHI MD361710

semidirect - 2 coils and ignition lead set T539P

MITSUBISHI				
Lancer Combi (CS)	1.6	09.03-10.08	72	4G18
Lancer Sedan	1.3	09.03-	60	4G13 (16V)
	1.6	09.03-	72	4G18
Space Star (DG_A)	1.3 16V	09.00-12.04	60	4G13 (16V)
	1.3 16V	12.98-12.04	61	4G13 (16V)

CL931 ▶

< CL931

MITSUBISHI				
Space Star (DG_A)	1.3 16V	06.98-12.04	63	4G13 (16V)
	1.6 16V	01.01-12.04	72	4G18

CL932

DIN

OEM-No.
HYUNDAI 27301-37150
KIA 27301-37150

HYUNDAI				
Tucson (JM)	2.7 Allrad	08.04-03.10	129	G6BA-G
KIA				
Sportage (JE, KM)	2.7 V6 4WD	09.04-	129	G6BA

CL933

OEM-No.
SUBARU 22433-AA441
22433-AA531
22443-AA530

1 coil per cylinder

SUBARU				
Outback (BE, BH)	3.0 H6	10.00-08.03	154	EZ30
Outback (BL, BP)	3.0 AWD	11.03-09.09	180	EZ30
Tribeca (B9)	3.0	10.06-	180	EZ30
	3.0	01.05-	184	EZ30
	3.6	09.07-	190	EZ36D

CL934

OEM-No.
SUBARU 22433-AA418
22433-AA480
22433-AA540
22433-AA640

1 coil per cylinder

SUBARU				
Forester (SG)	2.5 XT	09.05-	169	EJ255
Forester (SH)	2.0 AWD	01.10-	110	FB20
	2.0 AWD	01.08-	110	EJ20
	2.5 AWD	01.09-	126	EJ25
Impreza CC	2.5 WRX	09.05-	169	EJ255
Impreza CC (GR, GH)	2.5 WRX STI AWD	01.08-	221	EJ257
Impreza Sedan (GD)	2.0 i R AWD	09.05-	118	EJ204

< CL934

SUBARU				
Impreza Sedan (GD)	2.5 i WRX AWD	09.05-	169	EJ255
	2.5 WRX STi AWD	09.05-	206	EJ257
Legacy IV (BL, BP)	2.0 R	09.07-	110	EJ204
Legacy IV Stat. Wagon	2.0 AWD	06.05-	121	EJ20
	2.0 R AWD	09.07-	110	EJ204

Marking of boots
Обозначение наконечников
Typové označení koncovek

Original number of car producer
Обозначение производителя автомобилей
Označení dílu výrobcem automobilů

CP001

pencil coil (CL004)

OEM-No.
AUDI 058905447C
VW 058905447C

resistance: 2 kΩ
length: 111 mm

AUDI

A3 (8L1)	1.8 T quattro	12.96-05.03	110	AGU
A4 (8D2, B5)	1.8 T	01.95-11.00	110	ARK/AEB/ANB/APU
	1.8 T	12.97-11.00	132	AJL
	1.8 T quattro	01.95-11.00	110	ARK/AEB/ANB/APU
	1.8 T quattro	12.97-11.00	132	AJL
	S4 quattro 2.7	09.97-09.01	195	AGB/AZB
A4 Avant (8D5, B5)	1.8 T	03.96-09.01	110	ARK/AEB/ANB/APU

car / van make and model (body design)
марка и модель автомобиля (тип кузова)
značka a model osobního (užitkového) automobilu (typ karoserie)

year of production
год производства
rok výroby

engine power (kW)
мощность двигателя (kW)
výkon a objem motoru (kW)

type of engine
тип двигателя
typ motoru

application for coil
применение для катушки
použití pro cívku

Used designations / Использованные термины / Použité výrazy:

- **resistance**: сопротивление / odpor
- **length**: длина / délka
- **pencil / rail coil**: индивидуальная катушка / блок индивидуальных катушек / přímá cívka / zapalovací lišta
- **coil is not in offer**: катушка отсутствует в ассортименте / cívka není v nabídce
- **only for some versions of pencil coils**: только для некоторых типов катушек / pouze pro některé typy cívek

CP001

pencil coil (CL004)

OEM-No.
AUDI 058905447C
VW 058905447C

resistance: 2 kΩ
length: 111 mm

AUDI				
A3 (8L1)	1.8 T quattro	12.96-05.03	110	AGU
A4 (8D2, B5)	1.8 T	01.95-11.00	110	ARK/AEB/ANB/APU
	1.8 T	12.97-11.00	132	AJL
	1.8 T quattro	01.95-11.00	110	ARK/AEB/ANB/APU
	1.8 T quattro	12.97-11.00	132	AJL
	S4 quattro 2.7	09.97-09.01	195	AGB/AZB
A4 Avant (8D5, B5)	1.8 T	03.96-09.01	110	ARK/AEB/ANB/APU
	1.8 T	12.97-09.01	132	AJL
	1.8 T quattro	01.96-09.01	110	ARK/AEB/ANB/APU
	1.8 T quattro	12.97-09.01	132	AJL
	RS4 quattro 2.7	05.00-09.01	280	AZR/ASJ
	S4 quattro 2.7	09.97-09.01	195	AGB/AZB
A6 (4A, C4)	S6 Plus quattro 4.2	04.96-10.97	240	AHK
A6 (4B2, C5)	1.8 T	01.97-01.05	110	ARK/AEB/ANB/APU
	1.8 T	12.97-01.05	132	AJL
	1.8 T quattro	02.97-01.05	110	ARK/AEB/ANB/APU
	1.8 T quattro	12.97-01.05	132	AJL
	2.7 T	02.99-01.05	169	AJK
	2.7 T quattro	12.97-01.05	169	AJK/AZA
	2.7 T quattro	08.01-01.05	184	ARE
A6 Avant (4A, C4)	S6 Plus quattro 4.2	04.96-12.97	240	AHK
A6 Avant (4B5, C5)	1.8 T	12.97-01.05	110	ARK/AEB/ANB/APU
	1.8 T	04.99-01.05	132	AJL
	1.8 T quattro	12.97-01.05	110	ARK/AEB/ANB/APU
	1.8 T quattro	12.97-01.05	132	AJL
	2.7 T	02.99-01.05	169	AJK
	2.7 T quattro	12.97-01.05	169	AJK/AZA
	2.7 T quattro	08.01-01.05	184	ARE
A8 (4D2, 4D8)	S 8 quattro 4.2	07.96-06.99	250	AHC/AKH
Allroad (4BH, C5)	2.7 T quattro	05.00-08.05	184	ARE
SEAT				
Alhambra	1.8 T 20V	10.97-03.10	110	AWC/AJH
SKODA				
Octavia (1U2)	1.8 T	08.97-12.10	110	AGU
	1.8 T 4x4	05.01-05.06	110	AGU
Octavia Combi (1U5)	1.8 T	07.98-12.10	110	AGU
	1.8 T 4x4	05.01-05.06	110	AGU
VW				
Bora (1J2)	1.8 T	05.00-05.05	110	AGU
Bora Combi (1J6)	1.8 T	05.00-05.05	110	AGU
Golf IV (1J1)	1.8 T	08.97-06.05	110	AGU
Golf IV Variant (1J5)	1.8 T	05.00-06.06	110	AGU
Passat (3B2)	1.8 T	10.96-11.00	110	AEB/ANB/APU
Passat Variant (3B5)	1.8 T	06.97-11.00	110	AEB/ANB/APU
Sharan (7M_)	1.8 T 20V	09.97-03.10	110	AJH

CP002

pencil coil (CL033)

OEM-No.
AUDI 034905447

resistance: 5 kΩ
length: 123 mm

AUDI				
80 (8C, B4)	S2 quattro	02.93-12.94	169	ABY
80 Avant (8C, B4)	RS2 quattro	03.94-05.95	232	ADU
	S2 quattro	02.93-07.95	169	ABY
100 (4A, C4)	S4 Turbo quattro	08.91-06.94	169	AAN
100 Avant (4A, C4)	S4 Turbo quattro	09.91-06.94	169	AAN
A6 (4A, C4)	S6 Turbo quattro	06.94-10.97	169	AAN
A6 Avant (4A, C4)	S6 Turbo quattro	06.94-12.97	169	AAN
Coupe (89, 8B)	S2 quattro 2.2	10.92-12.96	169	ABY

CP003

pencil coil (CL600, CL601)

OEM-No.
BMW 1730412
1730521
9067831
1354489085

resistance: 1,8 kΩ
length: 115 mm

BMW				
3 (E30)	318 is	09.89-08.91	100	M42 B18 (184S1)
3 (E36)	318 is	03.93-02.98	103	M42 B18 (184S1)
	320 i	09.90-02.98	110	M52 B20/M50 B20
	323 i 2.5	03.95-02.98	125	M52 B25 (256S3)
	325 i	09.90-09.95	141	M50 B25
	328 i	01.95-02.98	142	M52 B28 (286S1)
	M3 3.2	09.95-02.98	236	S50 B32 (326S1)
3 (E46)	320 i	03.98-09.00	110	M52 B20 (206S4)
	320 i	06.00-09.02	125	M54 B22 (226S1)
	323 i	03.98-09.00	125	M52 B25 (256S4)
	325 i	06.00-09.02	141	M54 B25 (256S5)
	325 xi	06.00-09.02	141	M54 B25 (256S5)
	328 i	02.98-06.00	142	M52 B28 (286S2)
	330 i	06.00-09.02	170	M54 B30 (306S3)
	330 xi	06.00-09.02	170	M54 B30 (306S3)
3 Cabriolet (E36)	320 i	12.93-04.99	110	M52 B20/M50 B20
	323 i	06.95-04.99	125	M52 B25 (256S3)
	325 i	03.93-03.95	141	M50 B25 (256S2)
	328 i	03.95-04.99	142	M52 B28 (286S1)
	M3 3.2	10.95-04.99	236	S50 B32 (326S1)
3 Cabriolet (E46)	320 Ci	09.00-09.02	125	M54 B22 (226S1)
	323 Ci	04.00-09.00	125	M52 B25 (256S4)
	325 Ci	09.00-09.02	141	M54 B25 (256S5)
	330 Ci	06.00-09.02	170	M54 B30 (306S3)
3 Compact (E36)	323 ti	08.97-08.00	125	M52 B25 (256S3)
3 Compact (E46)	325 ti	06.01-09.02	141	M54 B25 (256S5)
3 Coupe (E36)	320 i	03.92-04.99	110	M52 B20/M50 B20
	323 i	03.95-04.99	125	M52 B25 (256S3)
	325 i	03.92-04.99	141	M50 B25
	328 i	01.95-04.99	142	M52 B28 (286S1)
	M3 3.2	10.95-04.99	236	S50 B32 (326S1)
3 Coupe (E46)	320 Ci	08.99-09.00	110	M52 B20 (206S4)
	320 Ci	06.00-09.02	125	M54 B22 (226S1)
	323 Ci	04.99-09.00	125	M52 B25 (256S4)
	325 Ci	06.00-09.02	141	M54 B25 (256S5)
	328 Ci	04.99-06.00	142	M52 B28 (286S2)
	330 Ci	06.00-09.02	170	M54 B30 (306S3)
	330 xi	06.00-09.02	170	M54 B30 (306S3)
3 Touring (E36)	320 i	01.95-10.99	110	M52 B20 (206S3)
	323 i	09.95-10.99	125	M52 B25 (256S3)
	328 i	01.95-10.99	142	M52 B28 (286S1)
3 Touring (E46)	320 i	10.99-09.00	110	M52 B20 (206S4)
	320 i	06.00-09.02	125	M54 B22 (226S1)
	325 i	06.00-09.02	141	M54 B25 (256S5)
	325 xi	06.00-09.02	141	M54 B25 (256S5)
	328 i	10.99-06.00	142	M52 B28 (286S2)
	330 i	06.00-09.02	170	M54 B30 (306S3)
	330 xi	06.00-09.02	170	M54 B30 (306S3)
5 (E34)	520 i 24V	09.89-09.95	110	M50 B20
	525 i 24V	09.89-09.95	141	M50 B25 (256S2)
	525 iX 24V	10.91-09.95	141	M50 B25
	530 i V8	09.92-09.95	160	M60 B30 (308S1)
	540 i V8	09.92-09.95	210	M60 B40 (408S1)
5 (E39)	520 i	04.99-06.03	100	M52 B20 (206S3)
	520 i	01.96-09.00	110	M52 B20 (206S3)
	520 i	09.00-09.02	125	M54 B22 (226S1)
	523 i	11.95-09.00	125	M52 B25 (256S3)
	525 i	09.00-09.02	141	M54 B25 (256S5)
	528 i	11.95-09.00	142	M52 B28
	530 i	09.00-09.02	170	M54 B30 (306S3)
	535 i	04.96-03.99	173	M62 B35
	535 i	04.99-06.03	180	M62 B35 (358S2)
	540 i	04.96-06.03	210	M62 B44

< CP003

BMW				
5 (E39)	M 4.9	10.98-06.03	294	S62 B50 (508S1)
5 Touring (E34)	520 i	11.91-01.97	110	M50 B20
	525 i	11.91-01.97	141	M50 B25
	525 ix	02.92-01.97	141	M50 B25
	530 i V8	09.92-01.97	160	M60 B30 (308S1)
	540 i	09.93-01.97	210	M60 B40 (408S1)
5 Touring (E39)	520 i	01.97-09.00	110	M52 B20 (206S3)
	520 i	04.99-05.04	100	M52 B20 (206S3)
	520 i	09.00-09.02	125	M54 B22 (226S1)
	523 i	01.97-09.00	125	M52 B25 (256S3)
	525 i	09.00-09.02	141	M54 B25 (256S5)
	528 i	01.97-09.00	142	M52 B28
	530 i	09.00-09.02	170	M54 B30 (306S3)
	540 i	01.97-05.04	210	M62 B44
7 (E32)	730 i,iL V8	04.92-09.94	160	M60 B30 (308S1)
	740 i,iL V8	04.92-09.94	210	M60 B40 (408S1)
7 (E38)	728 i,iL	08.95-11.01	142	M52 B28
	730 i,iL	10.94-11.01	155	M60 B30 (308S1)
	730 i,iL	10.94-11.01	160	M60 B30 (308S1)
	735 i,iL	01.96-11.01	173	M62 B35 (358S1)
	740 i,iL	10.94-11.01	210	M60 B40 (408S1)
	740 i,iL	01.96-11.01	210	M62 B44
	750 i,iL	12.94-11.01	240	M73 B54
8 (E31)	840 Ci	01.96-12.99	210	M62 B44 (448S1)
	840 i	02.93-02.96	210	M60 B40 (408S1)
	850 Ci	09.94-12.99	240	M73 B54 (54121)
X5 (E53)	3.0 i	05.00-10.02	163	M54 B30 (306S3)
	3.0 i	05.00-12.06	170	M54 B30 (306S3)
	4.4 i	05.00-12.03	210	M62 B44 (448S2)
	4.6 is	02.02-12.03	255	M62 B46 (468S1)
Z3 (E36)	2.0	04.99-01.03	110	M52 B20 (206S4)
	2.2	08.00-01.03	125	M54 B22 (226S1)
	2.8	04.97-06.00	141	M52 B28 (286S1)
	3.0	06.00-01.03	170	M54 B30 (306S3)
	M 3.2	03.97-06.01	236	S50 B32 (326S1)
Z3 Coupe (E36)	2.8	07.97-06.00	141	M52 B28 (286S1)
	3.0	06.00-06.03	170	M54 B30 (306S3)
	M 3.2	02.98-06.01	236	S50 B32 (326S1)
Z8 (E52)	4.9	06.00-06.03	294	S62 B50 (508S1)
LANDROVER				
Range Rover III (LM)	4.4 4x4	03.02-08.12	210	M62 B44
ROVER				
45 (RT)	2.0 V6	02.00-05.05	110	20 K4F
45 Sedan (RT)	2.0 V6	02.00-05.05	110	20 K4F
75 (RJ)	2.0 V6	02.99-03.03	110	20 K4F
	2.5 V6	02.99-03.99	129	KV 6
	2.5 V6	10.01-03.03	130	25 K4F
75 Tourer (RJ)	2.5 V6	08.01-03.03	130	KV 6

CP004

pencil coil (CL604, CL606)

OEM-No.

MERCEDES 0001593542
0001593642
for coil 0001587003
for coil 0001587503

resistance: 2 kΩ
length: 107 mm

DAEWOO				
Korando (KJ)	2.3	01.99-	105	M 161.970
	3.2 4x4	01.99-	156	M 104.995
Korando Cabrio (KJ)	2.0 16V	02.99-	94	M 161.950
	2.3	02.99-	105	M 161.970
Musso (FJ)	2.3	01.99-	103	M 111.970
	3.2 4x4	01.99-	162	M 104.992
Rexton (GAB_)	3.2 V6	04.02-	162	M 162.992
MERCEDES				
C-Class (W202)	C 180	09.95-05.00	90	M 111.921
	C 180	11.94-05.00	89	M 111.921
	C 200	09.95-05.00	100	M 111.945
	C 200 Kompressor	10.95-05.00	132	M 111.944

< CP004

MERCEDES				
C-Class (W202)	C 200 Kompressor	11.96-05.00	141	M 111.944
	C 220	06.96-06.97	110	M 111.974
	C 230 Kompressor	10.95-05.00	142	M 111.975
	C 280	05.93-05.00	142	M 104.941
	C 36 AMG	05.94-05.00	206	M 104.941 AMG
C-Class Kombi (S202)	C 180 T	06.96-09.00	90	M 111.921
	C 200 T	06.96-03.01	100	M 111.945
	C 200 T Kompr.	11.96-03.01	141	M 111.944
	C 230 T	06.96-06.98	110	M 111.974
	C 230 T Kompressor	06.97-09.00	142	M 111.975
CLK (C208)	200	06.97-06.02	100	M 111.945
	200 Kompressor	06.97-06.00	141	M 111.944
	230 Kompressor	06.97-06.00	142	M 111.975/_.973
CLK Cabriolet (A208)	200	03.98-03.02	100	M 111.941
	200 Kompressor	03.98-06.00	141	M 111.944
	230 Kompressor	03.98-06.00	142	M 111.975/_.973
Coupe (C124)	320 CE	10.92-05.93	162	M 104.992
E-Class (W124)	E 280	06.93-06.95	145	M 104.942
	E 280	06.93-06.95	142	M 104.942
	E 320	06.93-06.95	162	M 104.992
E-Class (W210)	E 200	06.95-08.00	100	M 111.942
	E 200 Kompressor	06.97-03.02	137	M 111.947
	E 230	06.95-06.97	110	M 111.970
	E 280	01.96-06.97	142	M 104.945
	E 320	06.95-06.97	162	M 104.995
E-Class Cabrio (A124)	E 320	06.93-03.98	162	M 104.992
	E 36 AMG	05.94-03.98	200	M 104.992 AMG
E-Class Coupe (C124)	E 320	06.93-06.97	162	M 104.992
	E 36 AMG	05.94-06.97	200	M 104.992 AMG
	E 36 AMG	06.93-04.95	195	M 104.992 AMG
E-Class Kombi (S124)	E 280 T	06.93-06.96	142	M 104.942
	E 280 T	06.93-06.96	145	M 104.942
	E 320 T	06.93-06.96	162	M 104.992
	E 36 T AMG	05.94-06.96	200	M 104.992 AMG
E-Class Kombi (S210)	E 200 T	06.96-08.00	100	M 111.942
	E 200 T Kompr.	06.97-03.03	137	M 111.947
	E 230 T	06.96-06.97	110	M 111.970
G-Class (W463)	G 320	09.94-12.97	155	M 104.996
	G 36 AMG	01.95-	200	M 104.996 AMG
G-Class Cabrio (W463)	320 GE	09.94-11.97	155	M 104.996
Kombi (S124)	280 TE	10.92-06.93	145	M 104.942
	320 TE	10.92-06.93	162	M 104.992
M-Class (W163)	ML 230	02.98-06.05	110	M 111.977
S-Class (W140)	300 SE 2.8	01.93-10.98	145	M 104.944
	300 SE,SEL/S320	03.91-10.98	170	M 104.994
	S 280	02.93-10.98	142	M 104.944
Sedan (W124)	280 E	10.92-06.93	145	M 104.942
	320 E	10.92-06.93	162	M 104.992
SL (R129)	280	08.93-10.01	142	M 104.943
	320	09.93-10.01	170	M 104.991
SLK (R170)	200	09.96-03.00	100	M 111.946
	200 Kompressor	03.00-04.04	120	M 111.958
	200 Kompressor	10.96-03.00	141	M 111.943
	230 Kompressor	09.96-03.00	142	M 111.973
Sprinter 2-t Bus	214	02.95-05.06	105	M 111.979
	214 NGT	04.00-05.06	92	M 111.984
Sprinter 2-t Flatbed	214	02.95-05.06	105	M 111.979
	214 NGT	04.00-05.06	92	
Sprinter 2-t Van	214	02.95-05.06	105	M 111.979/_.984
	214 NGT	04.00-05.06	92	M 111.984
Sprinter 3-t Bus	314	02.95-05.06	105	M 111.984
	314 4x4	08.02-05.06	105	M 111.984
	314 NGT	04.00-05.06	92	M 111.984
Sprinter 3-t Flatbed	314	02.95-05.06	105	M 111.984
	314 4x4	08.02-05.06	105	M 111.984
	314 NGT	04.00-05.06	92	
Sprinter 3-t Van	314	02.95-05.06	105	M 111.979/_.984
	314 4x4	08.02-05.06	105	M 111.984
	314 NGT	04.00-05.06	92	
Sprinter 4-t Bus	414	02.96-05.06	105	M 111.979
Sprinter 4-t Flatbed	414	02.96-05.06	105	M 111.979

CP004 ▶

< CP004

MERCEDES				
Sprinter 4-t Flatbed	414 4x4	05.97-05.06	105	M 111.979
Sprinter 4-t Van	414	02.96-05.06	105	M 111.979
	414 4x4	05.97-05.06	105	M 111.979
V-Class (638/2)	V 200	02.97-07.03	95	M 111.948/_.950
	V 230	10.96-07.03	105	M 111.978
Vito Bus (638)	113 2.0	02.96-07.03	95	M 111.948/_.950
	114 2.3	12.96-07.03	105	M 111.978
	113 2.0	03.97-07.03	95	M 111.948/_.950
	114 2.3	03.97-07.03	105	M 111.978
SSANG YONG				
Korando (KJ)	2.0	05.97-	94	
	2.3	05.97-	103	M 111.970
	2.3	01.99-	105	
	3.2	12.96-	154	M 104.995
	3.2	01.99-	156	M 104.995
	3.2	06.97-	162	M 104.992
Korando Cabrio	2.3	11.97-	103	
	2.3	02.99-	105	
	3.2	01.99-	156	M 104.995
	3.2	06.97-	162	M 104.992
Musso (FJ)	2.0	10.96-	93	E20
	2.3	10.96-	103	M 111.970
	2.3	04.03-	110	
	3.2	06.96-	162	M 104.992
Rexton (GAB_)	3.2	04.02-	162	G32D
TAGAZ				
Road Partner	2.3 4x4	01.08-	110	
	3.2 4x4	01.08-	162	
Tager	2.3	10.08-	110	
	2.3 4x4	10.08-	110	
	3.2 4x4	10.08-	162	
VW				
LT 28-35 II Bus	2.3	05.96-07.06	105	AGL
LT 28-46 II Flatbed	2.3	06.96-07.06	105	AGL
LT 28-46 II Van	2.3	05.96-07.06	105	AGL

CP005

pencil coil (CL601) — OEM-No.

BMW 1402463

resistance: 1,8 kΩ
length: 122 mm

BMW				
3 (E36)	M3 3.0	08.94-09.95	210	S50 B30 (306S1)
3 Cabriolet (E36)	M3 3.0	01.94-10.95	210	S50 B30 (306S1)
3 Coupe (E36)	M3 3.0	10.92-01.95	210	S50 B30 (306S1)
	M3 3.0	01.95-10.95	217	S50 B30 (306S1)

CP008

coil is not in offer — OEM-No.

LANDROVER for coil NEC101010

resistance: 1,8 kΩ
length: 122 mm

ROVER				
45 (RT)	2.0 V6	02.00-05.05	110	20 K4F
45 Sedan (RT)	2.0 V6	02.00-05.05	110	20 K4F

CP009

pencil coil — OEM-No.

AUDI 077905447A
VW 077905447A

resistance: 2 kΩ
length: 130 mm

AUDI				
A8 (4D2, 4D8)	3.7	07.95-12.98	169	AEW
	3.7 quattro	07.95-11.98	169	AKJ/AEW
	4.2 quattro	03.94-07.96	180	AEM
	4.2 quattro	03.94-11.98	220	AKG/ABZ

CP010

pencil coil (CL505, CL589) — OEM-No.

HYUNDAI for coil 0K247-18-100A
for coil 27301-26002
KIA for coil 0K247-18-100A
for coil 27301-26002

resistance: - kΩ
length: 105 mm

KIA				
Carens I (FC)	1.8 i	11.00-07.02	81	T8
Carens II (FJ)	1.8	07.02-	93	TB
Clarus (K9A)	1.8 i 16V	07.96-	85	T8
Clarus Combi (GC)	1.8 i 16V	05.98-	85	T8
Sephia (FA)	1.5 i	02.96-10.97	59	B5
	1.6 i	01.95-10.97	59	B6
	1.8 i 16V	01.95-10.97	82	OK24N/OK26Y
Sephia Sedan	1.5 i	02.96-10.97	59	B5
	1.8 i 16V	01.95-10.97	82	OK24N/OK26Y
Shuma (FB)	1.5 i 16V	10.97-03.01	65	
	1.8 i 16V	10.97-03.01	81	T8
Shuma Sedan	1.5	03.96-12.98	59	OK280
	1.5 i 16V	10.97-10.01	65	
	1.8 GX	05.99-10.01	85	
Shuma II (FB)	1.8	04.03-08.04	84	T8

CP011

pencil coil (CL553) — OEM-No.

KIA for coil 27300-39050
for coil 27300-39700
for coil 27300-39800

resistance: - kΩ
length: 103 mm

KIA				
Opirus (GH)	3.5	09.03-	149	G6CU

CP012

pencil coil (CL515) — OEM-No.

HYUNDAI for coil 27301-38020
KIA for coil 27301-38020

resistance: 1 kΩ
length: 104 mm

HYUNDAI				
H-1 / Starex	2.4	08.01-04.04	82	G4CS
	2.4 4WD	08.01-04.04	82	G4CS
	2.4 4WD	06.01-04.04	99	G4JS

< CP012

HYUNDAI				
Santa Fé I (SM)	2.0	08.01-03.06	99	G4BP
	2.4 16V	02.01-03.06	100	G4JS-G
	2.4 16V	02.01-03.06	107	G4JS-G
	2.4 16V 4x4	02.01-03.06	100	G4JS-G
	2.4 16V 4x4	02.01-03.06	107	G4JS-G
Sonata IV (EF)	2.0 16V	10.01-11.04	96	G4JP-EG
	2.0 16V	06.98-10.01	100	G4JP-G
	2.4 16V	03.98-10.01	105	G4BS
Trajet (FO)	2.0	02.04-07.08	100	G4JP-G
	2.0	02.04-07.08	103	G4GC-G
Tucson (JM)	2.0	08.04-03.10	104	G4GC
	2.0 Allrad	08.04-03.10	104	G4GC
KIA				
Magentis (GD)	2.0	05.01-	100	G4JP
Sorento I (JC)	2.4	08.02-	102	G4JS

CP013

pencil coil (CL548)

OEM-No.
HYUNDAI for coil 0K013-18-100
KIA for coil 0K013-18-100

resistance: 5 kΩ
length: 94 mm

KIA				
Sportage (K00)	2.0	10.00-08.03	87	FE (16V)
	2.0 4WD	10.00-08.03	87	FE (16V)
	2.0 i 16V	10.99-08.03	94	FE (16V)
	2.0 i 16V 4WD	04.94-08.03	94	FE (16V)

CP014

coil is not in offer

OEM-No.
GM 89057965
JEEP 56041476AA

resistance: - kΩ
length: 69 mm

JEEP				
Cherokee (XJ)	4.0 i	07.98-09.01	127	
	4.0 i 4x4	01.95-09.01	131	ERH
Wrangler II (TJ)	4.0	06.98-04.07	124	
	4.0 Rubicon	08.03-04.07	128	

CP015

pencil coil (CL621)

OEM-No.
MERCEDES 2721590142

resistance: - kΩ
length: 111 mm

MERCEDES				
C-Class (W203)	C 230	01.05-02.07	150	M 272.920
	C 280	01.05-02.07	170	M 272.940
	C 280 4-matic	01.05-02.07	170	M 272.941
	C 350	01.05-02.07	200	M 272.960
	C 350 4-matic	01.05-02.07	200	M 272.960/_.970
C-Class (W204)	C 230	01.07-	150	M 272.921
	C 230 4-matic	07.07-	150	M 272.911
	C 280	01.07-	170	M 272.947
	C 280 4-matic	07.07-	170	M 272.948
	C 300	07.09-	170	M 272.947
	C 300 4-matic	07.07-	170	M 272.948

< CP015

MERCEDES				
C-Class (W204)	C 350	01.07-	200	M 272.961
	C 350	01.11-	225	M 276.957
	C 350 4-matic	07.07-	200	M 272.971
	C 350 4-matic	01.11-	225	M 276.957
C-Class Coupe (CL203)	C 230	01.05-05.08	150	M 272.920
	C 350	01.05-05.08	200	M 272.960
C-Class T-Model (S203)	C 230	01.05-08.07	150	M 272.920
	C 280	01.05-08.07	170	M 272.940
	C 280 4-matic	01.05-08.07	170	M 272.941
	C 350	01.05-08.07	200	M 272.960
	C 350 4-matic	01.05-08.07	200	M 272.970
C-Class T-Model (S204)	C 230	08.07-	150	M 272.921
	C 280	08.07-	170	M 272.947
	C 350	08.07-	200	M 272.961
CLC-Class (CL203)	CLC 230	05.08-06.11	150	M 272.920
	CLC 350	05.08-06.11	200	M 272.960
CLK (C209)	280	01.05-05.09	170	M 272.940
	350	01.05-05.09	200	M 272.960
CLK Cabriolet (A209)	CLK 280	01.05-03.10	170	M 272.940
	CLK 350	01.05-03.10	200	M 272.960
	CLK 500	06.06-03.10	285	M 273.967
CLS (C219)	CLS 280	07.08-12.10	170	M 272.943
	CLS 300	04.09-12.10	170	M 272.943
	CLS 350	10.04-12.10	200	M 272.964
	CLS 500	04.06-12.10	285	M 273.960
E-Class (W211)	E 230	09.07-12.08	150	M 272.922
	E 280	03.05-12.08	170	M 272.943
	E 280 4-matic	01.06-12.08	170	M 272.943
	E 350	03.05-12.08	200	M 272.964
	E 350 4-matic	03.05-12.08	200	M 272.972
	E 500	04.06-12.08	285	M 273.960
	E 500 4-matic	04.06-12.08	285	M 273.962
E-Class (W212)	E 350 4-matic	01.09-08.11	200	M 272.977
	E 500	01.09-	285	M 273.971
	E 500 4-matic	01.09-	285	M 273.970
E-Class Cabrio (A207)	E 500	01.10-	285	M 273.966
E-Class Coupe (C207)	E 500	01.09-	285	M 273.966
E-Class T-Model (S211)	E 230 T	05.07-07.09	150	M 272.922
	E 280 T	03.05-07.09	170	M 272.943
	E 280 T 4-matic	03.05-07.09	170	M 272.943
	E 350 T	03.05-07.09	200	M 272.964
	E 350 T 4-matic	03.05-07.09	200	M 272.972
	E 500 T	04.06-07.09	285	M 273.960
	E 500 T 4-matic	04.06-07.09	285	M 273.962
E-Class T-Model (S212)	E 350 4-matic	11.09-	200	M 272.977
	E 500	11.09-	285	M 273.971
GL-Class (X164)	GL 450 4-matic	09.06-	250	M 273.923
	GL 500 4-matic	09.06-	285	M 273.963
GLK-Class (X204)	280 4-matic	06.08-06.09	170	M 272.948
	300 4-matic	07.09-04.11	170	M 272.948
	350 4-matic	06.08-04.11	200	M 272.971
M-Class (W164)	ML 350 4-matic	07.05-	200	
	ML 500 4-matic	12.07-	285	M 273.963
R-Class (W251, V251)	R 280	01.07-	170	M 272.945
	R 300	07.09-	170	M 272.945
	R 350	01.07-	200	M 272.967
	R 350 4-matic	01.06-	200	M 272.967
	R 500 4-matic	01.07-	285	M 273.963
S-Class (W221)	S 350	10.05-	200	M 272.965
	S 350 4-matic	02.08-	200	M 272.975
	S 350 CGI	04.11-	225	M 276.950
	S 350 CGI 4-matic	04.11-	225	M 276.950
	S 450	12.05-	250	M 273.922
	S 450 4-matic	12.05-	250	M 273.924
	S 500	10.05-	285	M 273.961
	S 500 4-matic	10.05-	285	M 273.961/_.968
S-Class Coupe (C216)	CL 500	06.06-	285	M 273.961
	CL 500 4-matic	02.08-	285	M 273.968
SL (R230)	280	03.08-01.12	170	M 272.949
	300	04.09-01.12	170	M 272.949
	350	03.06-01.12	200	M 272.966

CP015 ▶

< CP015

MERCEDES				
SL (R230)	350	04.08-01.12	232	M 272.968
SLK (R171)	280	01.05-02.11	170	M 272.942
	300	04.09-02.11	170	M 272.942
	350	06.04-02.11	200	M 272.963
	350	01.08-02.11	224	M 272.969
Sprinter 3-t Bus	224	06.06-	190	M 272.979
Sprinter 3-t Flatbed	224	06.06-	190	M 272.979
Sprinter 3-t Van	224	06.06-	190	M 272.979
Sprinter 3,5-t Bus	324	06.06-	190	M 272.979
Sprinter 3,5-t Flatbed	324	06.06-	190	M 272.979
Sprinter 3,5-t Van	324	06.06-	190	M 272.979
Sprinter 4,6-t Flatbed	424	06.06-	190	M 272.979
Sprinter 4,6-t Van	424	06.06-	190	M 272.979
Sprinter 5-t Flatbed	524	06.06-	190	M 272.979
Sprinter 5-t Van	524	06.06-	190	M 272.979
Vito / Mixto Van	126	09.07-	190	M 272.978
Vito Bus (W639)	126	09.07-	190	M 272.978

CP016

pencil coil (CL547)

OEM-No.
GM 89057916
89057964
MITSUBISHI for coil MD362907

resistance: - kΩ
length: 139 mm

MITSUBISHI				
Carisma (DA_)	1.6	05.96-06.06	66	4G92
	1.6	01.00-06.06	70	4G92
	1.6	05.97-06.06	73	4G92
	1.6	09.00-06.06	76	4G92
	1.8	05.96-06.06	85	4G93
	1.8 16V	07.95-06.06	103	4G93
Carisma Sedan	1.3	09.00-10.04	55	4G13 (12V)
	1.6	09.96-06.06	66	4G92
	1.6	01.00-06.06	70	4G92
	1.6	05.97-06.06	73	4G92
	1.6	09.00-06.06	76	4G92
	1.8	09.96-06.06	85	4G93
Colt IV (CA_A)	1.6	03.96-04.96	66	4G92
Colt V (CJ_, CP_)	1300	09.00-09.03	60	4G13 (16V)
	1600	09.00-09.03	76	4G92
	1600 GLX	05.96-09.00	66	4G92
Galant VI (EA_)	2.0	09.00-10.04	98	4G63 (SOHC 16V)
	2.0	09.96-09.00	100	4G63 (SOHC 16V)
	2.4 GDI	09.00-10.04	106	4G64 (GDI)
	2.4 GDI	02.99-09.00	110	4G64 (GDI)
Galant VI Stat. Wagon	2.0	09.96-09.00	100	4G63 (SOHC 16V)
	2.0	09.00-10.03	98	4G63 (SOHC 16V)
	2.4 GDI	09.00-10.03	106	4G64 (GDI)
	2.4 GDI	02.99-10.03	110	4G64 (GDI)
Lancer VI (CJ-CP_)	1.6 16V	12.95-08.03	66	4G92
Lancer Combi (CS_W)	2.0	09.03-12.07	99	4G63 (DOHC 16V)
Lancer Sedan (CS_A)	2.0	12.03-	99	4G63 (DOHC 16V)
Outlander I (CU_W)	2.4 4WD	05.03-10.06	102	4G64 (SOHC 16V)
Pajero II Canvas Top	1.8 GDI	06.98-04.00	96	4G93 (GDI)
Pajero Pinin	1.8	11.01-06.07	84	4G93
	1.8 GDI	10.99-06.07	88	4G93 (GDI)
Space Runner (N6_W)	2.0	08.99-08.02	100	4G63 (DOHC 16V)
Space Star (DG_A)	1.8 GDI	06.98-12.04	87	4G93 (GDI)
	1.8 GDI	06.98-12.04	90	4G93 (GDI)
	1.8 MPI	10.02-12.04	82	4G93
Space Wagon (N3_W)	2.0	10.92-10.98	98	4G63 (DOHC 16V)
	2.0 4WD	10.92-10.98	98	4G63 (DOHC 16V)
Space Wagon (N9_W)	2.0 GDI	10.98-12.04	98	4G63 (SOHC 16V)
	2.4 GDI	10.98-12.04	110	4G64 (GDI)
	2.4 GDI	09.00-12.04	108	4G64 (GDI)

< CP016

MITSUBISHI				
Space Wagon (N9_W)	2.4 GDI 4WD	10.98-12.04	110	4G64 (GDI)
	2.4 GDI 4WD	09.00-12.04	108	4G64 (GDI)

CP018

pencil coil (CL915)

OEM-No.
NISSAN 22448-7S015
22448-8J110
for coil 22448-8J115

resistance: 2 kΩ
length: 124 mm

NISSAN				
Murano (Z50)	3.5 4x4	08.03-	172	VQ35DE
Pathfinder (R50)	3.5 V6 4WD	01.03-12.04	162	VQ35
Pathfinder (R51)	4.0 4WD	09.05-	198	VQ40DE

CP019

pencil coil (CL592, CL911, CL916)

OEM-No.
NISSAN 22448-3H315
22448-EA000

resistance: 2 kΩ
length: 130 mm

INFINITI				
FX	45	02.03-12.08	232	VK45DE
	45 Allrad	01.03-12.08	232	VK45DE
NISSAN				
Primera (P12)	2.0	03.02-	103	QR20DE
Primera Combi (P12)	2.0	03.02-	103	QR20DE
Primera Hatchback	2.0	07.02-	103	QR20DE
Teana I (J31)	2.0	10.03-06.08	103	QR20DE
X-Trail (T30)	2.0	07.01-	103	QR20DE
	2.0 4x4	07.01-	103	QR20DE
	2.5 4x4	09.02-	121	QR25DE
X-Trail (T31)	2.5 4x4	06.07-	124	QR25DE

CP020

pencil coil (CL535, CL537)

OEM-No.
NISSAN for coil 22448-2Y000
for coil 22448-2Y001
for coil 22448-31U01

resistance: - kΩ
length: 153 mm

INFINITI				
I30	3.0	01.97-	142	VQ30DE
NISSAN				
Maxima II (J30)	3.0 i	10.88-06.94	125	VG30E
Maxima QX (A32)	2.0	02.95-08.00	103	VQ20DE
	2.5 V6 24V	02.95-08.00	140	VQ25DE
	3.0	01.95-08.00	142	VQ30DE
Maxima QX (A33)	2.0 V6 24V	03.00-11.03	103	VQ20DE
	2.5 V6 24V	03.00-11.03	154	VQ25DE
	3.0 V6 24V	03.00-11.03	147	VQ30DE
Maxima St. Wagon	2.0 QX	10.97-	103	VQ20DE
	2.5 V6 24V	10.97-	140	VQ25DE
	3.0 QX	10.97-	142	VQ30DE

CP021

pencil coil (CL536) OEM-No.
NISSAN for coil 22448-31U06

resistance: - kΩ
length: 132 mm

INFINITI				
I30	3.0	01.97-	142	VQ30DE
NISSAN				
Maxima QX (A32)	2.0	02.95-08.00	103	VQ20DE
	2.5 V6 24V	02.95-08.00	140	VQ25DE
	3.0	01.95-08.00	142	VQ30DE
Maxima QX (A33)	2.0 V6 24V	03.00-11.03	103	VQ20DE
	2.5 V6 24V	03.00-11.03	154	VQ25DE
	3.0 V6 24V	03.00-11.03	147	VQ30DE
Maxima St. Wagon	2.0 QX	10.97-	103	VQ20DE
	2.5 V6 24V	10.97-	140	VQ25DE
	3.0 QX	10.97-	142	VQ30DE

CP022

pencil coil (CL538) OEM-No.
NISSAN for coil 22448-2Y005

resistance: - kΩ
length: 129 mm

NISSAN				
Maxima II (J30)	3.0 i	10.88-06.94	125	VG30E

CP023

pencil coil (Mitsubishi system right) OEM-No.
NISSAN for coil 22448-31U01

resistance: - kΩ
length: 154 mm

INFINITI				
I30	3.0	01.97-	142	VQ30DE
NISSAN				
Maxima II (J30)	3.0 i	10.88-06.94	125	VG30E
Maxima QX (A32)	2.0	02.95-08.00	103	VQ20DE
	2.5 V6 24V	02.95-08.00	140	VQ25DE
	3.0	01.95-08.00	142	VQ30DE
Maxima QX (A33)	2.0 V6 24V	03.00-11.03	103	VQ20DE
	2.5 V6 24V	03.00-11.03	154	VQ25DE
	3.0 V6 24V	03.00-11.03	147	VQ30DE
Maxima St. Wagon	2.0 QX	10.97-	103	VQ20DE
	2.5 V6 24V	10.97-	140	VQ25DE
	3.0 QX	10.97-	142	VQ30DE

CP024

pencil coil (Mitsubishi system left) OEM-No.
NISSAN for coil 22448-31U16

resistance: - kΩ
length: 133 mm

INFINITI				
I30	3.0	01.97-	142	VQ30DE
NISSAN				
Maxima II (J30)	3.0 i	10.88-06.94	125	VG30E
Maxima QX (A32)	2.0	02.95-08.00	103	VQ20DE
	2.5 V6 24V	02.95-08.00	140	VQ25DE
	3.0	01.95-08.00	142	VQ30DE

< CP024

NISSAN				
Maxima QX (A33)	2.0 V6 24V	03.00-11.03	103	VQ20DE
	2.5 V6 24V	03.00-11.03	154	VQ25DE
	3.0 V6 24V	03.00-11.03	147	VQ30DE
Maxima St. Wagon	2.0 QX	10.97-	103	VQ20DE
	2.5 V6 24V	10.97-	140	VQ25DE
	3.0 QX	10.97-	142	VQ30DE

CP025

pencil coil (CL914: cyl 1) OEM-No.
NISSAN for coil 22448-4W001

resistance: - kΩ
length: 143 mm

NISSAN				
Pathfinder (R50)	3.3 V6 4WD	03.98-10.00	110	VG33E
	3.3 V6 4WD	09.97-12.04	125	VG33E
	3.5 V6 4WD	11.00-12.01	162	VQ35

CP026

pencil coil (CL913: cyl 2-6) OEM-No.
NISSAN for coil 22448-4W011

resistance: - kΩ
length: 121 mm

NISSAN				
Pathfinder (R50)	3.3 V6 4WD	03.98-10.00	110	VG33E
	3.3 V6 4WD	09.97-12.04	125	VG33E
	3.5 V6 4WD	11.00-12.01	162	VQ35

CP027

pencil coil (CL625) OEM-No.
PORSCHE 99660210301

resistance: 2 kΩ
length: 113 mm

PORSCHE				
911 (996)	3.4 Carrera	09.97-09.01	221	M 96.01/M 96.04
	3.4 Carrera 4	09.97-09.01	221	M 96.01/M 96.04
	3.6 Carrera 4	10.01-08.05	235	M 96.03
911 (997)	3.6 Carrera	07.04-12.08	239	M 96.05
	3.6 GT 3	03.06-12.09	305	M 97.76
	3.6 Turbo	03.06-12.09	353	M 97.70
	3.8 Carrera 4S	07.04-12.08	261	M 97.01
	3.8 Carrera S	07.04-12.08	261	M 97.01
911 Cabriolet (996)	3.4 Carrera	02.98-09.01	221	M 96.01/M 96.04
911 Cabriolet (997)	3.6 Carrera	04.05-12.08	239	M 96.05
	3.6 Carrera 4	04.05-12.08	239	M 96.05
	3.6 Turbo	09.07-12.09	353	M 97.70
Boxster (986)	2.5	09.96-08.99	150	M 96.20
Boxster (987)	2.7	11.04-12.06	176	M 96.25
	2.7	07.06-12.09	180	M 97.20
	S 3.2	11.04-12.06	206	M 96.26
	S 3.4	07.06-12.09	217	M 97.21
Cayman (987)	2.7	07.06-12.09	180	M 97.20

CP028

pencil coil (CL625)

OEM-No.
PORSCHE 99660210500

resistance: 2 kΩ
length: 115 mm

PORSCHE				
911 (996)	3.6 Carrera	10.01-08.05	235	M 96.03
	3.6 Carrera S	02.03-08.05	254	M 96.03
	3.6 Carrera 4S	02.03-08.05	254	M 96.03
	3.6 GT2	04.01-08.05	340	M 96.70
	3.6 GT2	10.03-08.05	355	M 96.70
	3.6 GT3	03.99-08.05	265	M 96.76
	3.6 GT3	03.03-08.05	280	M 96.79
	3.6 Turbo 4	06.00-08.05	309	M 96.70
	3.6 Turbo 4S	02.03-08.05	331	M 96.70
911 Cabriolet (996)	3.4 Carrera 4	02.98-09.01	221	M 96.02/M 96.04
	3.6 Carrera	10.01-08.05	235	M 96.03
	3.6 Carrera 4	10.01-08.05	235	M 96.03
	3.6 Carrera S	06.02-08.05	254	M 96.03
	3.6 Carrera 4S	06.02-08.05	254	M 96.03
	3.6 Turbo 4	10.03-08.05	309	M 96.70
	3.6 Turbo 4S	10.03-08.05	331	M 96.70
911 Cabriolet (997)	3.8 Carrera S	04.05-12.08	261	M 97.01
	3.8 Carrera 4S	04.05-12.08	261	M 97.01
911 Targa (996)	3.6	12.01-08.05	235	M 96.03
Boxster (986)	2.7	08.99-07.02	162	M 96.22
	2.7	07.02-12.04	168	M 96.23
	S 3.2	08.99-07.02	185	M 96.21
	S 3.2	07.02-12.04	191	M 96.24
	S 3.2	01.04-12.04	196	M 96.24
Cayman (987)	S 3.4	11.05-12.09	217	M 97.21

CP029

pencil coil (CL512, CL557)

OEM-No.
SUZUKI for coil 33410-77E20
for coil 33410-77E21
for coil 33410-77E22

resistance: - kΩ
length: 118 mm

SUZUKI				
Baleno (EG)	1.8 GTX	03.96-05.02	89	J18A
Baleno CC	1.8 GTX	03.96-05.02	89	J18A
Baleno Combi	1.8 i 16V	08.96-05.02	89	J18A
Grand Vitara I (FT)	2.0 4x4	03.98-07.03	94	J20A
	2.5 V6 24V	04.98-07.03	106	H 25 A
	2.5 V6 24V 4x4	04.01-07.03	116	H 25 A
	2.7 4x4	09.01-07.03	127	H 27 A
	2.7 4x4	04.03-07.03	135	H 27 A
Grand Vitara II (JT)	2.0 Allrad	10.05-	103	J20A
Vitara (ET, TA)	2.0 16V Allrad	12.96-03.98	97	J20A
	2.0 V6 24V Allrad	12.94-03.98	100	H 20 A
	2.5 V6 24V Allrad	12.95-03.98	118	H 25 A
Vitara Cabrio (ET, TA)	2.0 16V	12.96-03.99	97	J20A

CP030

pencil coil (CL580)

OEM-No.
TOYOTA 90919-02212

resistance: - kΩ
length: 136 mm

TOYOTA				
4 Runner	3.4 i	11.95-03.96	136	5VZ-FE
Land Cruiser 90	3.4 i 24V	04.96-	131	5VZ-FE

CP031

coil is not in offer

OEM-No.
TOYOTA 90919-02213

resistance: - kΩ
length: 131 mm

TOYOTA				
Paseo Cabrio (EL54)	1.5	10.96-01.98	66	5E-FE
Paseo Coupe (EL54)	1.5 16V	08.95-07.99	66	5E-FE

CP033

coil is not in offer

OEM-No.
TOYOTA 90080-19012

resistance: - kΩ
length: 126 mm

TOYOTA				
Camry (_ V2_)	3.0 24V	08.96-11.01	140	1MZ-FE
	3.0 V6	08.96-11.01	135	1MZ-FE

CP034

pencil coil (CL121)

OEM-No.
VOLVO for coil 30713416
9125601-0
9125601-6

resistance: - kΩ
length: 104 mm

VOLVO				
C70 I Cabriolet	2.0 T	03.00-10.05	120	B 5204 T4
	2.0 T	08.98-10.05	166	B 5204 T3
	2.3 T5	08.98-10.05	176	B 5234 T3
	2.3 T5	07.02-10.05	180	B 5234 T9
	2.4 T	07.02-10.05	147	B 5244 T7
	2.5	06.98-10.05	125	B 5254 S
	2.5 T	08.98-10.05	142	B 5254 T/B 5244T
C70 I Coupe	2.0 T	03.00-09.02	120	B 5204 T4
	2.0 T	08.98-09.02	166	B 5204 T3
	2.3 T-5	08.98-09.02	176	B 5234 T3
	2.5	03.99-09.02	121	B 5254 S
	2.5	05.99-09.02	125	B 5244 S/B 5254S
S60 I	2.0 T	07.00-07.04	132	B 5204 T5
	2.4	11.00-04.10	103	B 5244 S2
	2.4	11.00-04.10	125	B 5244 S
	2.4 BiFuel (CNG)	06.02-04.10	103	B 5244 SG
	2.5 T	02.04-04.10	154	B 5254 T2
	2.5 T AWD	04.04-04.10	154	B 5254 T2
S70 (LS)	2.0	01.97-11.00	120	B 5204 T4
	2.0 Turbo	01.97-11.00	166	B 5204 T3
	2.3	04.99-09.00	195	B 5234 T7
	2.3 T-5	08.98-11.00	176	B 5234 T3
	2.4	08.99-11.00	103	B 5244 SG/B 5244S2
	2.4	01.97-11.00	125	B 5244 S/B 5254S
	2.4 AWD	04.99-09.00	103	B 5244 S2
	2.4 AWD	10.98-05.99	121	B 5254 S
	2.4 AWD	04.99-09.00	125	B 5244 S
	2.4 T5 AWD	08.98-04.99	142	B 5254 T
	2.4 Turbo	08.98-11.00	142	B 5254 T/B 5244T
	2.5 BiFuel	07.99-11.00	103	B 5244 SG
S80 I (TS, XY)	2.0	06.98-07.06	120	B 5204 T4
	2.0 T	12.99-07.04	132	B 5204 T5
	2.0 T	06.98-07.06	166	B 5204 T3
	2.4	01.99-07.06	103	B 5244 S2

< CP034

VOLVO				
S80 I (TS, XY)	2.4	01.99-07.06	125	B 5244 S
	2.4 BiFuel	09.01-07.06	103	B 5244 SG2
	2.4 T	06.00-07.06	147	B 5244 T3
	2.4 T5 AWD	04.00-09.03	147	B 5244 T3
	2.5 T	03.03-07.06	154	B 5254 T2
	2.5 T AWD	07.03-07.06	154	B 5254 T2
	2.8 T6	05.98-07.06	200	B 6284 T
	2.9	03.99-07.06	147	B 6294 S
	2.9	05.98-07.06	150	B 6304 S3
	3.0	06.01-07.06	144	B 6294 S2
	3.0 T6	06.01-07.06	200	B 6294 T
V70 I (LV)	2.0	01.97-03.00	120	B 5204 T4
	2.0 Turbo	08.98-03.00	155	B 5204 T
	2.0 Turbo	08.98-03.00	166	B 5204 T3
	2.0 Turbo AWD	08.98-03.00	166	B 5204 T3
	2.3 AWD	08.98-09.98	177	B 5234 T3
	2.3 T-5	08.98-03.00	176	B 5234 T3
	2.3 T-5 AWD	08.98-03.00	176	B 5234 T3
	2.4	08.99-05.00	103	B 5244 SG2/B 5244S2
	2.4	01.97-05.00	125	B 5244 S/B 5254S
	2.4 AWD	10.98-05.99	121	B 5254 S
	2.4 BiFuel	08.99-03.00	103	B 5244 SG
	2.4 Turbo	08.98-03.00	142	B 5254 T/B 5244T
	2.5 Turbo AWD	08.98-05.00	142	B 5254 T/B 5244T
V70 II (SW)	2.0 T	07.01-08.07	132	B 5204 T5
	2.3 T5	03.00-08.04	184	B 5234 T3
	2.4	03.00-08.07	103	B 5244 S2
	2.4	03.00-08.07	125	B 5244 S
	2.4 BiFuel	09.01-08.07	103	B 5244 SG
	2.4 T	03.00-08.03	147	B 5244 T3
	2.4 T AWD	09.01-08.02	147	B 5244 T3
	2.5 AWD	09.02-12.04	155	B 5254 T2
	2.5 T	04.04-08.07	154	B 5254 T2
	2.5 T AWD	09.02-08.07	154	B 5254 T2
XC70 Cross Country	2.4 T XC AWD	11.97-09.02	142	B 5254 T
	2.4 T XC AWD	03.00-09.02	147	B 5244 T3
	2.5 T XC AWD	09.02-08.07	154	B 5254 T2
XC90 I	2.5 T	10.02-	154	B 5254 T2
	2.5 T AWD	10.12-	154	B 5254 T9
	2.9 T6	10.02-	200	B 6294 T

CP035

pencil coil (CL410) — OEM-No. VOLVO for coil 8677837

resistance: - kΩ
length: 96 mm

FORD				
Focus II (DA_)	2.5 RS	01.09-07.11	224	JZDA
	2.5 RS 500	05.10-07.11	257	JZDA
	2.5 ST	10.05-09.12	166	HYDA
Kuga I	2.5	03.09-	147	HYDB/HYDC
	2.5 4x4	03.09-	147	HYDB
Mondeo IV (BA7)	2.5	03.07-09.14	162	HUBA
Mondeo IV Sedan	2.5	03.07-09.14	162	HUBA
Mondeo IV Turnier	2.5	03.07-12.12	162	HUBA
S-Max (WA6)	2.5 ST	05.06-	162	HUWA
VOLVO				
C30	2.4 i	10.06-12.12	125	B 5244 S4
	2.5 T5	10.06-12.12	162	B 5254 T3
	2.5 T5	03.07-12.12	169	B 5254 T7
C70 II Cabriolet	2.4	03.06-	103	B 5244 S5
	2.4 i	03.06-	125	B 5244 S4
	2.5 T5	03.06-	162	B 5254 T3
	2.5 T5	03.07-	169	B 5254 T7
S40 II (MS)	2.4	01.04-	103	B 5244 S5

< CP035

VOLVO				
S40 II (MS)	2.4	01.04-	125	B 5244 S4
	2.5 T5	01.04-	162	B 5254 T3
	2.5 T5	03.07-	169	B 5254 T7
	2.5 T5 AWD	04.04-	162	B 5254 T3
	2.5 T5 AWD	03.07-	169	B 5254 T7
S60 I	2.0 T	08.04-04.10	132	B 5204 T5
	2.4 T	11.00-04.10	147	B 5244 T3
	2.4 T AWD	11.01-04.10	147	B 5244 T3
	2.4 T5	04.04-04.10	191	B 5244 T5
	R 2.5 T AWD	03.03-04.10	221	B 5254 T4
S80 I (TS, XY)	2.0 T	08.04-07.06	132	B 5204 T5
S80 II (AS)	2.5 T	03.06-	147	B 5254 T6
	2.5 T	01.10-	170	B 5254 T10
	2.5 T FlexFuel	05.08-	147	B 5254 T8
	2.5 T FlexFuel	01.10-	170	B 5254 T11
V40 CC	2.5 T5	01.14-	183	B 5254 T14
V50 (MW)	2.4	04.04-	103	B 5244 S5
	2.4	04.04-	125	B 5244 S4
	2.5 T5	04.04-	162	B 5254 T3
	2.5 T5	03.07-	169	B 5254 T7
	2.5 T5 AWD	04.04-	162	B 5254 T3
	2.5 T5 AWD	03.07-	169	B 5254 T7
V70 II (SW)	2.0 T	07.01-08.07	132	B 5204 T5
	2.4 T5	04.04-08.07	191	B 5244 T5
	R 2,5 T AWD	03.03-08.07	221	B 5254 T4
V70 III (BW)	2.5 T	08.07-	147	B 5254 T6
	2.5 T	01.10-	170	B 5254 T10
	2.5 T FlexiFuel	05.08-	147	B 5254 T8
	2.5 T FlexiFuel	10.09-	170	B 5254 T11
XC60	2.5 T5 AWD	04.14-	187	B 5254 T12

CP036

pencil coil (CL1305, CL306, CL307) — OEM-No. ALFA ROMEO 71713719

resistance: 2 kΩ
length: 102 mm

ALFA ROMEO				
145 (930)	1.4 i.e. 16V T.S.	12.96-01.01	76	AR 33503
	1.6 i.e. 16V T.S.	12.96-01.01	88	AR 67601
	1.8 i.e. 16V	03.98-01.01	106	AR 32201
	1.8 i.e. 16V T.S.	12.96-12.98	103	AR 67106
	2.0 16V Quadrifoglio	03.98-01.01	114	AR 32301
	2.0 16V T.S.	10.95-01.01	110	AR 67204
146 (930)	1.4 i.e. 16V T.S.	11.96-01.01	76	AR 33503
	1.6 i.e. 16V T.S.	11.96-01.01	88	AR 67601
	1.8 i.e. 16V T.S.	11.96-01.01	103	AR 67106
	1.8 i.e. 16V T.S.	03.98-01.01	106	AR 32201
	2.0 16V Quadrifoglio	03.98-01.01	114	AR 32301
	2.0 16V T.S.	10.95-01.01	110	AR 67204
147 (937)	1.6 16V T.S.	01.01-03.10	88	AR 32104
	1.6 16V T.S. Eco	01.01-03.10	77	AR 37203
	2.0 16V T.S.	01.01-03.10	110	AR 32310
155 (167)	1.6 16V T.S.	05.96-12.97	88	AR 67601
	1.7 T.S. 16V	05.96-12.97	103	AR 67106
	2.0 T.S. 16V	03.95-12.97	110	AR 67299/_67204
156 (932)	1.6 16V T.S.	09.97-09.05	88	AR 32103/_32104
	1.8 16V T.S.	09.97-10.00	106	AR 32201
	1.8 16V T.S.	10.00-09.05	103	AR 32205
	2.0 16V T.S.	09.97-10.00	114	AR 32301
	2.0 16V T.S.	10.00-03.02	110	AR 32310
156 Sportwagon	1.6 16V T.S.	05.00-05.06	88	AR 32103/_32104
	1.8 16V T.S.	05.00-10.00	106	AR 32201
	1.8 16V T.S.	10.00-05.06	103	AR 32205
	2.0 16V T.S.	05.00-06.02	114	AR 32301
	2.0 16V T.S.	10.00-03.02	110	AR 32310
166 (936)	2.0 T.S.	09.98-10.00	114	AR 34103
	2.0 T.S.	10.00-06.07	110	AR 36301
GT (937)	1.8 TS	11.03-09.10	103	AR 32205

CP036 ▶

< CP036

ALFA ROMEO				
GTV (916C_)	1.8 16V	05.98-10.05	106	AR 32201
	2.0 T.S. 16V	06.95-10.05	110	AR 16201/_32310
	2.0 T.S. 16V	05.98-08.00	114	AR 32301
Spider (916S_)	1.8 16V	05.98-04.05	106	AR 32201
	2.0 T.S. 16V	06.95-04.05	110	AR 16201/_32310
	2.0 T.S. 16V	05.98-08.00	114	AR 32301

CP038

pencil coil (CL616) OEM-No.

MERCEDES 0001594942

resistance: - kΩ
length: 94 mm

MERCEDES				
C-Class (W203)	C 180	10.00-05.02	95	M 111.951
	C 200 Kompressor	05.00-06.02	120	M 111.955
C-Class Coupe (CL203)	C 180	03.01-05.02	95	M 111.951
	C 200 Kompressor	03.01-05.02	120	M 111.955
	C 230 Kompressor	03.01-05.02	145	M 111.981
C-Class Kombi (S202)	C 180 T	09.00-03.01	95	M 111.952
	C 200 T Kompr.	09.00-03.01	120	M 111.956
C-Class T-Model (S203)	C 180	03.01-05.02	95	M 111.951
	C 200 Kompressor	03.01-05.02	120	M 111.955
CLK (C208)	200 Kompressor	06.00-06.02	120	M 111.956
	230 Kompressor	06.00-06.02	145	M 111.982
CLK Cabriolet (A208)	200 Kompressor	06.00-03.02	120	M 111.956
	230 Kompressor	06.00-03.02	145	M 111.982
E-Class (W210)	E 200 Kompressor	08.00-03.02	120	M 111.957
E-Class Kombi (S210)	E 200 T Kompr.	08.00-03.03	120	M 111.957
SLK (R170)	200 Kompressor	03.00-04.04	120	M 111.958
	230 Kompressor	03.00-04.04	145	M 111.983

CP039

pencil coil (CL618, CL622) OEM-No.

MERCEDES 0001594842

resistance: - kΩ
length: 98 mm

MERCEDES				
C-Class (W203)	C 180 Kompressor	05.02-02.07	105	M 271.946
	C 200 CGI Kompr.	07.03-02.07	125	M 271.942
	C 200 Kompressor	05.02-02.07	120	M 271.940
	C 230 Kompressor	02.04-02.07	141	M 271.948
C-Class (W204)	C 180 CGI	01.07-	115	M 271.820
	C 180 Kompressor	01.08-	115	M 271.910
	C 180 Kompressor	01.07-	115	M 271.952
	C 200 CG	01.07-	135	M 271.820
	C 200 Kompressor	01.07-	135	M 271.950
	C 250 CGI	07.09-	150	M 271.860
C-Class Coupe (C204)	C 180	06.11-	115	M 271.820
	C 250	06.11-	150	M 271.860
C-Class Coupe (CL203)	C 160 Kompressor	05.02-05.08	90	M 271.921
	C 180 Kompressor	05.02-05.08	105	M 271.946
	C 200 CGI Kompr.	03.03-05.08	125	M 271.942
	C 200 Kompressor	05.02-05.08	120	M 271.940
	C 230 Kompressor	05.02-05.08	141	M 271.948
C-Class T-Model (S203)	C 180 Kompressor	05.02-08.07	105	M 271.946
	C 200 CGI Kompr.	07.03-08.07	125	M 271.942
	C 200 Kompressor	05.02-08.07	120	M 271.940
	C 230 Kompressor	02.04-08.07	141	M 271.948
C-Class T-Model (S204)	C 180 CGI	11.09-	115	M 271.820
	C 180 Kompressor	01.08-	115	M 271.910
	C 180 Kompressor	08.07-	115	M 271.952
	C 200 Kompressor	08.07-	135	M 271.950
	C 250	07.09-	150	M 271.860

< CP039

MERCEDES				
CLC-Class (CL203)	CLC 160	02.09-06.11	95	M 271.911
	CLC 180 Kompr.	05.08-06.11	105	M 271.946
	CLC 200 Kompr.	05.08-06.11	135	M 271.957
CLK (C209)	200 CGI	07.03-05.09	125	M 271.942
	200 Kompressor	10.06-05.09	135	M 271.955
	200 Kompressor	09.02-05.09	120	M 271.940
CLK Cabriolet (A209)	CLK 200 CGI	07.03-03.10	125	M 271.942
	CLK 200 Kompr.	02.03-03.10	120	M 271.940
	CLK 200 Kompr.	10.06-03.10	135	M 271.955
E-Class (W211)	E 200 Kompressor	04.06-12.08	135	M 271.956
	E 200 Kompressor	11.02-12.08	120	M 271.941
	E 200 NGT	11.06-12.08	120	M 271.941
E-Class (W212)	E 200 CGI	08.09-	135	M 271.820/_.860
	E 200 NGT	03.11-	120	M 271.958
	E 250 CGI	01.09-	150	M 271.860
E-Class Cabrio (A207)	E 200 CGI	01.10-	135	M 271.820/_.860
	E 250 CGI	01.10-	150	M 271.860
E-Class Coupe (C207)	E 200 CGI	01.10-	135	M 271.820/_.860
	E 250 CGI	01.09-	150	M 271.860
E-Class T-Model (S211)	E 200 Kompressor	04.06-07.09	135	M 271.956
	E 200 T Kompr.	03.03-07.09	120	M 271.941
E-Class T-Model (S212)	E 200 CGI	11.09-	135	M 271.860
	E 250 CGI	11.09-	150	M 271.860
SLK (R171)	200 Kompressor	03.04-02.11	120	M 271.944
	200 Kompressor	01.08-02.11	135	M 271.954
SLK (R172)	200	02.11-	135	M 271.860/_.861
	250	02.11-	150	M 271.860/_.861
Sprinter 3,5-t Bus	316	09.08-	115	M 271.951
Sprinter 3,5-t Flatbed	316	09.08-	115	M 271.951
Sprinter 3,5-t Van	316	09.08-	115	M 271.951
Sprinter 5-t Flatbed	516	09.08-	115	M 271.951

CP040

pencil coil (CL620) OEM-No.

PORSCHE for coil 94860210401

resistance: - kΩ
length: 57 mm

PORSCHE				
Cayenne (955)	S 4.5	09.02-09.07	250	M 48.00
	4.5 Turbo	09.02-09.07	331	M 48.50
	S 4.5 Turbo	01.04-09.07	368	M 48.50S

CP041

pencil coil (CL564, CL571, CL575, CL579, CL924) OEM-No.

TOYOTA for coil 90080-19027
90919-A2003
for coil 90919-A2005

resistance: - kΩ
length: 40 mm

LEXUS				
ES (_ _V6_)	250	06.12-	135	2AR-FE
	300h	06.12-	118	2AR-FXE
GS (UZS161, JZS160)	430	11.00-03.05	208	3UZ-FE
GS (_ _S19_)	3.0	04.05-11.11	170	3GR-FE
	300	04.05-11.11	183	3GR-FSE
	350 AWD	05.08-11.11	232	2GR-FSE
	450h	02.06-11.11	218	2GR-FSE
	450h	02.06-11.11	254	2GR-FSE
GS (GRL1_, GWL1_)	250	01.12-	154	4GR-FSE
	350	01.12-	234	2GR-FSE
	300h	10.13-	133	2AR-FSE
	350 AWD	01.12-	234	2GR-FSE
GX (URJ15_)	460	11.09-	218	1UR-FE
IS I (JCE1_, GXE1_)	200	04.99-07.05	114	1G-FE

< CP041

LEXUS				
IS II (GSE2_, ALE2)	250	10.05-	153	4GR-FSE
	250 AWD	10.05-	153	4GR-FSE
IS III (GSE3_, AVE3_)	300h	04.13-	133	2AR-FSE
	250	04.13-	153	4GR-FSE
IS C (GSE2_)	250	04.09-	153	4GR-FSE
IS SportCross	200	10.02-10.05	114	1G-FE
LS (UCF30)	430	10.00-08.06	207	3UZ-FE
LS (UVF4_, USF4_)	460	05.08-	255	1UR-FE
	460	04.06-	280	1UR-FSE
	460	09.12-	285	1UR-FSE
	460 AWD	12.08-	270	1UR-FSE
	460 AWD	09.12-	272	1UR-FSE
	600h	08.07-	290	2UR-FSE
LX (URJ201)	570	11.07-	270	3UR-FE
RX (MCU15)	300 AWD	10.00-05.03	148	1MZ-FE
RX (MHU3_, GSU3_)	300	05.03-12.08	150	1MZ-FE
RX (GYL1_, GGL15)	270	12.08-	138	1AR-FE
SC (UZZ40_)	430	05.01-07.10	210	3UZ-FE
TOYOTA				
Avensis (T22)	2.0 VVT-i	10.00-02.03	110	1AZ-FSE
Avensis (T25)	2.0	04.03-11.08	108	1AZ-FSE
	2.4	10.03-11.08	120	2AZ-FSE
	2.4	09.03-11.08	125	2AZ-FSE
Avensis Combi (T25)	2.0	04.03-12.09	108	1AZ-FSE
	2.4	10.03-11.08	120	2AZ-FSE
	2.4	09.03-11.08	125	2AZ-FSE
Avensis Liftback (T22)	2.0 VVT-i	10.00-02.03	110	1AZ-FSE
Avensis Sedan (T25)	2.0	04.03-11.08	108	1AZ-FSE
	2.4	10.03-11.08	120	2AZ-FSE
	2.4	09.03-11.08	125	2AZ-FSE
Avensis S. Wagon (T22)	2.0 VVT-i	10.00-02.03	110	1AZ-FSE
Avensis Verso	2.0 VVT-i	08.01-11.09	110	1AZ-FE
Camry	2.4 VVT-i	11.01-11.06	112	2AZ-FE
	3.0 V6	11.01-11.06	137	1MZ-FE
Camry Sedan (XV4)	2.4 VVTi	01.06-09.11	116	2AZ-FE
	2.4 VVTi Hybrid	01.06-09.11	105	2AZ-FXE
Camry Sedan (AVV5_)	2.5	09.11-	133	2AR-FE
Corolla Sedan (E15_)	1.33	01.07-	74	1NR-FE
IQ	1.33	01.09-	72	1NR-FE
Land Cruiser (J12)	4.0	01.03-	183	1GR-FE
Land Cruiser (J20)	4.6 V8	09.10-	227	1UR-FE
	4.7 V8	01.08-	212	2UZ-FE
Land Cruiser 100	4.7	01.98-	173	2UZ-FE
	4.7	02.02-	175	2UZ-FE
Land Cruiser 150	4.0 V6 Dual VVTi	01.10-	205	1GR-FE
	4.0 V6 VVT-i	01.10-	207	1GR-FE
Mark X I (GRX12_)	2.5 VVTi	03.04-09.09	158	4GR-FSE
	2.5 VVTi 4WD	05.04-09.09	158	4GR-FSE
	3.0 VVTi	05.04-09.09	183	3GR-FSE
Previa	2.4	08.00-01.06	115	2AZ-FE
RAV 4 II	2.0 VVTi 4WD	06.00-11.05	110	1AZ-FE
RAV 4 III	2.0 VVT-i 4WD	03.06-	112	1AZ-FE
Urban Cruiser	1.33	04.10-	73	1NR-FE
	1.33	04.09-	74	1NR-FE
Verso S (_P12_)	1.33	11.10-	70	1NR-FE
	1.33	11.10-	73	1NR-FE
Yaris (_ _P13_)	1.3	09.11-	70	1NR-FE
	1.3	09.11-	73	1NR-FKE/1NR-FE

CP042

pencil coil (CL520, CL555, CL576)

OEM-No.

TOYOTA for coil 91919-02237
for coil 91919-02239
for coil 91919-02240
for coil 91919-02243

resistance: - kΩ
length: 40 mm

CITROEN				
C1 (PM_, PN_)	1.0	06.05-	50	1KR-FE

< CP042

DAIHATSU				
Cuore VIII	1.0	04.07-	51	1KR-FE
PEUGEOT				
107	1.0	06.05-	50	1KR (384 F)
SUBARU				
Justy IV	1.0	01.07-	51	1KR-FE
TOYOTA				
Auris	1.4 VVTi	03.07-	71	4ZZ-FE
Avensis (T22)	1.6 VVT-i	10.00-02.03	81	3ZZ-FE
	1.8 VVT-i	10.00-02.03	95	1ZZ-FE
Avensis (T25)	1.6 VVT-i	04.03-11.08	81	3ZZ-FE
	1.8	04.03-11.08	95	1ZZ-FE
Avensis Combi (T25)	1.6 VVT-i	04.03-11.08	81	3ZZ-FE
	1.8	04.03-11.08	95	1ZZ-FE
Avensis Liftback (T22)	1.6 VVT-i	10.00-02.03	81	3ZZ-FE
	1.8 VVT-i	10.00-02.03	95	1ZZ-FE
Avensis Sedan (T25)	1.6 VVT-i	04.03-11.08	81	3ZZ-FE
	1.8	04.03-11.08	95	1ZZ-FE
Avensis S. Wagon (T22)	1.6 VVT-i	10.00-02.03	81	3ZZ-FE
	1.8 VVT-i	10.00-02.03	95	1ZZ-FE
Aygo (WNB1, KGB1)	1.0	07.05-	50	1KR-FE
Celica (ZZT23_)	1.8 16V VT-i	08.99-07.05	105	1ZZ-FE
Corolla (E11)	1.6 16V	02.00-11.01	81	3ZZ-FE
Corolla (E12)	1.4 VVT-i	01.02-12.06	71	4ZZ-FE
	1.6 VVT-i	01.02-12.06	81	3ZZ-FE
Corolla Combi (E12)	1.4 VVT-i	01.02-02.07	71	4ZZ-FE
	1.6 VVT-i	01.02-02.07	81	3ZZ-FE
Corolla Compact (E11)	1.6	02.00-01.02	81	3ZZ-FE
Corolla Liftback (E11)	1.6	02.00-01.02	81	3ZZ-FE
Corolla Sedan (E12)	1.4 VVT-i	08.02-07.07	71	4ZZ-FE
	1.6 VVT-i	08.02-07.07	81	3ZZ-FE
Corolla S. Wagon (E16)	1.5 Hybrid	10.14-	54	1NZ-FXE
Corolla Verso (ZDE12)	1.6 VVT-i	01.02-05.04	81	3ZZ-FE
	1.8 VVT-i	01.02-05.04	99	1ZZ-FE
	1.8 VVTi 4WD	10.01-02.04	99	1ZZ-FE
Corolla Verso (ZER)	1.6	04.04-03.09	81	3ZZ-FE
	1.8	04.04-03.09	95	1ZZ-FE
Corolla Wagon (E11)	1.6 16V	02.00-10.01	81	3ZZ-FE
Hiace IV Bus (LH1_)	2.7	09.01-11.01	105	3RZ-FE
	2.7	11.01-08.06	106	3RZ-FE
	2.7 4WD	09.01-08.06	105	3RZ-FE
Hiace IV Van	2.7	09.01-08.06	105	3RZ-FE
	2.7 4WD	09.01-	106	3RZ-FE
IQ	1.0	01.09-	50	1KR-FE
Land Cruiser	2.7	09.02-08.04	112	3RZ-FE
MR 2 III (ZZW3_)	1.8 16V VT-i	10.99-06.07	103	1ZZ-FE
Prius Liftback	1.5	08.03-03.09	57	1NZ-FXE
Prius Sedan	1.5 Hybrid	05.00-01.04	53	1NZ-FXE
RAV 4 II	1.8 VVTi	08.00-11.05	92	1ZZ-FE
Yaris (_ _P1_)	1.0 16V	03.03-09.05	48	1SZ-FE
	1.0 16V	04.99-09.05	50	1SZ-FE
	1.3	04.02-09.05	64	2SZ-FE
	1.3 16V	11.99-09.05	63	2NZ-FE
	1.5 TS	01.03-09.05	77	1NZ-FE
	1.5 VVT-i TS	04.01-09.05	78	1NZ-FE
	1.5 VVT-i TS	03.03-07.05	110	1NZ-FE
Yaris (_ _P9_)	1.0 VVT-i	08.05-	51	1KR-FE
	1.3 VVT-i	08.05-	64	2NZ-FE/2SZ-FE
	1.33 VVT-i	07.10-	73	1NR-FE
	1.33 VVT-i	03.09-	74	1NR-FE
Yaris Verso (_P2_)	1.3	11.02-09.05	62	2NZ-FE
	1.3	08.99-10.02	63	2NZ-FE
	1.5	05.03-09.05	77	1NZ-FE
	1.5	03.00-09.05	78	1NZ-FE
	1.5 4WD	03.00-09.05	78	1NZ-FE

CP043

CP043

pencil coil (CL581) OEM-No.

TOYOTA for coil 91919-02252
for coil 91919-02258

resistance: - kΩ
length: 55 mm

TOYOTA				
Auris (_E15_)	1.6	05.09-	97	1ZR-FAE
	1.6 VVTi	03.07-	91	1ZR-FE
	1.8	02.09-	108	2ZR-FAE
Avensis Sedan (ZRT27)	1.6	11.08-	97	1ZR-FAE
	1.8	11.08-	108	2ZR-FAE
	2.0	11.08-	112	3ZR-FAE/3ZR-FE
Avensis S. Wagon (T27)	1.6	02.09-	97	1ZR-FAE
	1.8	02.09-	108	2ZR-FAE
	2.0	02.09-	112	3ZR-FAE/3ZR-FE
Corolla Sedan (E18)	1.6 BiFuel	06.13-	90	1ZR-FE
RAV 4 III	2.0	12.08-	116	3ZR-FAE
	2.0 4WD	12.08-	116	3ZR-FAE
Verso (_AUR2_)	1.6	04.09-	97	1ZR-FAE
	1.8	04.09-	108	2ZR-FAE
Yaris (_ _ P9_)	1.8 VVTi	01.07-	98	2ZR-FE

CP044

pencil coil (CL920) OEM-No.

TOYOTA for coil 91919-A2004

resistance: - kΩ
length: 59 mm

LEXUS				
RX (_U3_)	350 AWD	02.06-12.08	203	2GR-FE
RX (GYL1_, GGL15)	350 AWD	12.08-	204	2GR-FE
	450h	12.08-	183	2GR-FXE
	450h AWD	12.08-	183	2GR-FXE

CP045

pencil coil (CL572) OEM-No.

MAZDA for coil FP85-18-100C
KJ01-18-T08

resistance: - kΩ
length: 117 mm

MAZDA				
323 F VI (BJ)	1.9 16V	09.98-01.01	84	FP /FP55
	2.0	01.01-05.04	96	FS7G/FS7E
323 S VI (BJ)	1.9 16V	09.98-05.04	84	FP /FP55
	2.0	01.01-05.04	96	FS7G/FS7E
Premacy (CP)	1.9	07.99-03.05	74	FP
	1.9	07.99-03.05	84	FP
	2.0	11.01-03.05	96	FS7G/FS7E

CP046

pencil coil (CL594) OEM-No.

MAZDA for coil ZZY1-18-100

resistance: - kΩ
length: 94 mm

MAZDA				
323 F VI (BJ)	1.5 16V	09.98-01.01	65	ZL06/ZL05
	1.6	01.01-05.04	70	ZM
	1.6	01.01-05.04	72	ZM

< CP046

MAZDA				
323 S VI (BJ)	1.5 16V	09.98-01.01	65	ZL06/ZL05
	1.6	01.01-05.04	70	ZM
	1.6	01.01-05.04	72	ZM

CP047

pencil coil (CL412, CL599) OEM-No.

MAZDA for coil L3G2-18-100A

resistance: - kΩ
length: 102 mm

FORD				
Galaxy (WA6)	2.3	07.07-	118	SEWA
Mondeo IV (BA7)	2.3	07.07-09.14	118	SEBA
Mondeo IV Sedan	2.3	07.07-09.14	118	SEBA
Mondeo IV Turnier	2.3	07.07-09.14	118	SEBA
S-Max (WA6)	2.3	07.07-	118	SEWA
MAZDA				
3 (BK)	2.0	03.06-06.09	110	LF17
	2.3 MPS Turbo	12.06-06.09	191	L3-VDT/L3N9
3 (BL)	2.0 MZR	06.09-	110	LF17/LF-DE
	2.0 MZR DISI	06.09-	111	LF5W/LF5H
3 Sedan (BK)	2.0	03.06-	110	LF17
3 Sedan (BL)	2.0 MZR	06.09-	110	LF17/LF-DE
	2.0 MZR DISI	06.09-	111	LF5W/LF5H
6 (GH)	2.0 MZR	08.07-	108	LF17
	2.0 MZR	01.10-	114	LF-DE
	2.5 MZR	08.07-	125	L5-VE
6 CC (GH)	2.0 MZR	08.07-	108	LF17
	2.0 MZR	01.10-	114	LF-DE
	2.5 MZR	08.07-	125	L5-VE
6 Combi (GH)	2.0 MZR	02.08-	108	LF17
	2.0 MZR	01.10-	114	LF-DE
	2.5 MZR	02.08-	125	L5-VE
6 Station Wagon (GY)	2.0	03.05-08.07	108	LFF7
CX-7 (ER)	2.3 MZR DISI Turbo	11.06-	175	L3Y7
	2.3 MZR DISI Turbo	10.07-	190	L3-VDT
	2.3 MZR DISI Turbo	09.09-	191	L3-VDT
MX-5 III (NC)	2.0	09.08-	118	LF62/LF-DE

CP048

pencil coil (CL405) OEM-No.

FORD for coil 4MSZ-12029-BC
MAZDA for coil LF16-18-100B

resistance: - kΩ
length: 100 mm

FORD				
C-Max (DM2)	1.8	02.07-09.10	92	QQDA/QQDB
	1.8 Flexifuel	02.07-09.10	92	Q7DA
	2.0	02.07-09.10	107	AODA/AODB/SYDA
	2.0 CNG	04.09-09.10	107	SYDA
	2.0 LPG	06.08-09.10	107	SYDA
Focus C-Max	1.8	10.03-03.07	88	CSDB/CSDA
	1.8	04.04-03.07	92	QQDA/QQDB/Q7DA
	1.8 Flexifuel	01.06-03.07	92	Q7DA
	2.0	03.04-03.07	107	AODA/AODB/SYDA
Focus II (DA_)	1.8	03.06-09.12	92	QQDB
	1.8 Flexifuel	01.06-09.12	92	Q7DA
	2.0	11.04-01.08	107	AODA/AODB
	2.0 CNG	04.09-07.11	107	SYDA
	2.0 LPG	06.08-07.11	107	SYDA
Focus II Cabriolet	2.0	10.06-07.11	107	AODA/AODB
Focus II Combi	1.8	03.06-09.12	92	QQDB/Q7DA

< CP048

FORD				
Focus II Combi	1.8 Flexifuel	01.06-09.12	92	Q7DA
	2.0	11.04-01.08	107	AODA/AODB
	2.0 LPG	06.08-07.11	107	SYDA
Focus II Sedan	1.8	03.06-01.08	92	QQDB
	1.8 Flexifuel	06.06-07.11	92	Q7DA
	2.0	04.05-07.11	107	AODA/AODB
Galaxy (WA6)	2.0	05.06-06.15	107	AOWB/AOWA
	2.0 EcoBoost	05.11-06.15	149	TNWA
Mondeo IV (BA7)	2.0	03.07-09.14	107	AOBC/AOBA/TBBA
	2.0 Flexifuel	03.09-09.14	107	TBBB/TBBA
	2.0 LPG	07.09-09.14	107	TBBA
	2.0 SCTi	05.11-09.14	149	TNBA
Mondeo IV Sedan	2.0	03.07-09.14	107	AOBC/AOBA/TBBA
	2.0 Flexifuel	03.09-09.14	107	TBBB/TBBA
	2.0 LPG	07.09-09.14	107	TBBA
Mondeo IV Turnier	2.0	03.07-09.14	107	AOBC/AOBA/TBBA
	2.0 Flexifuel	03.09-09.14	107	TBBB/TBBA
	2.0 LPG	07.09-09.14	107	TBBA
	2.0 SCTi	03.10-09.14	149	TNBA
S-Max (WA6)	2.0	05.06-	107	AOWB/AOWA
	2.0 EcoBoost	05.11-	149	TNWA
	2.0 Flexifuel	05.06-	107	TBWA/TBWB
Transit Flatbed	2.3 16V [RWD]	04.06-08.14	107	GZFA/GZFC/GZFB
	2.3 16V CNG [RWD]	04.06-08.14	100	GZFA
	2.3 16V LPG [RWD]	04.06-08.14	107	GZFA
Transit Van	2.3 16V [RWD]	04.06-08.14	107	GZFA/GZFC/GZFB
	2.3 16V CNG [RWD]	04.06-08.14	100	GZFA
	2.3 16V LPG [RWD]	04.06-08.14	107	GZFA
MAZDA				
3 (BK)	2.0	10.03-06.09	110	LF17
3 Sedan (BK)	2.0	02.04-	110	LF17
Tribute (EP)	2.3 AWD	04.04-05.08	110	L3-VE
VOLVO				
C30	1.8	10.06-12.12	92	B 4184 S11
	1.8 FlexFuel	01.07-12.12	92	B 4184 S8
	2.0	10.06-12.12	107	B 4204 S3
	2.0 FlexFuel	01.10-12.12	107	B 4204 S4
S40 II (MS)	1.8	04.04-	92	B 4184 S11
	1.8 FlexFuel	01.06-	92	B 4184 S8
	2.0	10.06-	107	B 4204 S3
S80 II (AS)	2.0	01.08-	107	B 4204 S3
	2.0 FlexFuel	01.08-	107	B 4204 S4
V50 (MW)	1.8	04.04-	92	B 4184 S11
	1.8 FlexFuel	01.05-	92	B 4184 S8
	2.0	10.06-	107	B 4204 S3
	2.0 FlexFuel	01.10-	107	B 4204 S4
V70 III (BW)	2.0	10.07-	107	B 4204 S3
	2.0 FlexiFuel	01.08-	107	B 4204 S4

CP049

pencil coil (CL511) — OEM-No.
NISSAN for coil 22448-6N011
for coil 22448-6N015

resistance: 2 kΩ
length: 136 mm

NISSAN				
Almera II (N16)	1.5	07.00-	66	QG15DE
	1.5	10.02-	72	QG15DE
	1.8	07.00-	84	QG18DE
	1.8	10.02-	85	QG18DE
Almera II Hatchback	1.5	03.00-	66	QG15DE
	1.5	10.02-	72	QG15DE
	1.8	01.00-	84	QG18DE
	1.8	10.02-	85	QG18DE
Almera Tino (V10)	1.8	08.00-	84	QG18DE
	1.8	12.02-	85	QG18DE

< CP049

NISSAN				
Primera (P11)	1.6 16V	09.00-12.01	78	QG16DE
	1.8 16V	08.99-12.01	84	QG18DE
Primera (P12)	1.6	03.02-	78	QG16DE
	1.6	01.02-	80	QG16DE
Primera Combi (WP12)	1.6 Visia	01.02-	80	QG16DE
Primera Hatch. (P11)	1.6 16V	09.00-07.02	78	QG16DE
	1.8 16V	08.99-07.02	84	QG18DE
Primera Hatch. (P12)	1.6	07.02-	78	QG16DE
	1.6	07.02-	80	QG16DE
	1.8	07.02-	85	QG18DE
Primera Traveller	1.8 16V	08.99-12.01	84	QG18DE

CP050

pencil coil (CL153, CL554) — OEM-No.
NISSAN for coil 22448-ED800

resistance: - kΩ
length: 132 mm

NISSAN				
Cube (Z12)	1.6 16V	03.10-	81	HR16DE
Micra C+C (K12)	1.6 160 SR	08.05-	81	HR16DE
Micra III (K12)	160 SR 1.6	05.05-06.10	81	HR16DE
Note (E11)	1.6	03.06-	81	HR16DE
Qashqai / Qashqai +2	1.6	02.07-	84	HR16DE
Tiida CC (C11X)	1.6	09.07-	81	HR16DE
	1.8	09.07-	93	MR18DE
Tiida Sedan	1.6	09.07-	81	HR16DE
	1.8	09.07-	93	MR18DE
X-Trail (T31)	2.0	06.08-	103	MR20DE
	2.0	06.07-	104	MR20DE
	2.0 FWD	06.08-	103	MR20DE
	2.0 FWD	03.07-	104	MR20DE
RENAULT				
Fluence (L30_)	2.0 16V	02.10-	103	M4R 751/M4R 714
Grand Scénic III	2.0 16V	02.09-	103	M4R 711
Laguna III (BT0/1)	2.0 16V	10.07-	103	M4R 704
	2.0 16V Hi-Flex	10.07-	103	M4R 726
Laguna III Grandtour	2.0 16V	10.07-	103	M4R 704
	2.0 16V Hi-Flex	10.07-	103	M4R 704/M4R 726
Latitude (L70_)	2.0 16V	02.11-	103	M4R 746
Megane CC (EZ0/1_)	2.0 CVT	06.10-	103	M4R 713/M4R 711
Megane III CC	2.0 CVT	02.09-	103	M4R 713/M4R 711
Megane III Coupe	2.0 CVT	05.09-	103	M4R 711
Megane III Grandtour	2.0 CVT	05.09-	103	M4R 711/M4R F713
Scénic III	2.0 16V	02.09-	103	M4R 711/M4R 710

CP051

coil is not in offer — OEM-No.
NISSAN

resistance: 2 kΩ
length: 130 mm

NISSAN				
Qashqai / Qashqai +2	2.0	02.07-	104	MR20DE
	2.0 Allrad	02.07-	104	MR20DE

CP052

CP052

only for some versions of pencil coils

OEM-No.

NISSAN for coil 2244800QAA
OPEL for coil 4413233
RENAULT for coil 7700875000

resistance: - kΩ
length: 70 mm

DACIA, NISSAN, OPEL (VAUXHALL), RENAULT
- see CL100 in summary (CP052 is not for CL100!)

CP053

pencil coil (CL590)

OEM-No.

HYUNDAI for coil 27301-3E100
KIA for coil 27301-3E100

resistance: - kΩ
length: 52 mm

HYUNDAI				
Santa Fé II (CM)	2.7	01.07-	125	G6BA
	2.7 4x4	01.07-	125	G6BA
	2.7 V6 GLS	01.07-	139	G6EA
	2.7 V6 GLS 4x4	01.07-	139	G6EA
KIA				
Grand / Carnival III	2.7 V6	06.06-	139	G6EA
Magentis (MG)	2.7	11.05-	138	G6EA

CP054

pencil coil (CL595)

OEM-No.

HYUNDAI for coil 27301-26640
KIA for coil 27301-26640

resistance: - kΩ
length: 46 mm

HYUNDAI				
Accent II (LC)	1.6	12.02-11.05	77	G4ED-G
Accent II Sedan	1.6	12.02-11.05	77	G4ED-G
Accent III (MC)	1.4 GL	11.05-11.10	71	G4EE
	1.6 GLS	11.05-11.10	82	G4ED
Accent III Sedan	1.4 GL	11.05-11.10	71	G4EE
	1.6 GLS	11.05-11.10	82	G4ED
KIA				
Rio II (JB)	1.4 16V	03.05-	71	G4EE
	1.6 CVVT	03.05-	82	G4ED
Rio II Sedan	1.4 16V	03.05-	71	G4EE
	1.6 16V	03.05-	82	G4ED

CP055

pencil coil (CL908)

OEM-No.

HYUNDAI for coil 27301-3E400

resistance: - kΩ
length: 54 mm

HYUNDAI				
Grandeur (TG)	2.7	05.06-	141	G6BA
i40 (VF)	2.0 GDI	03.12-	131	G4NC
Santa Fé II (CM)	2.7	01.07-	125	G6BA
	2.7 4x4	01.07-	125	G6BA
	2.7 V6 GLS	01.07-	139	G6EA
	2.7 V6 GLS 4x4	01.07-	139	G6EA
Sonata VI (YF)	2.0 i	01.11-	121	G4KD

< CP055

KIA				
Carens IV	2.0	03.13-	130	G4NC

CP056

pencil coil (CL561)

OEM-No.

SUZUKI for coil 33400-65G00
for coil 33400-65G01

resistance: - kΩ
length: 117 mm

SUBARU				
Justy II (JMA, MS)	1.3 4x4	04.01-11.03	63	G13BB
Justy III (G3X)	1.5	09.03-	73	M15A
SUZUKI				
Alto (HA24)	1.1	09.04-12.08	46	F10DN/F10D
Baleno (EG)	1.3	02.99-05.02	52	G13BA
	1.3 i 16V	02.99-05.02	63	G13BB
	1.6 i 16V	02.99-05.02	72	G16B
	1.6 i 16V 4x4	02.99-05.02	72	G16B
Baleno CC	1.3	09.96-05.02	52	G13BA
	1.3 i 16V	02.99-05.02	63	G13BB
	1.6 i 16V	02.99-05.02	72	G16B
	1.6 i 16V 4x4	02.99-05.02	72	G16B
Baleno Combi	1.3 16V	02.99-05.02	63	G13BB
	1.6 i 16V	02.99-05.02	72	G16B
	1.6 i 16V	02.99-05.02	73	G16B
	1.6 i 16V 4x4	02.99-05.02	72	G16B
	1.6 i 16V 4x4	02.99-05.02	73	G16B
Carry Van (FD)	1.3	03.99-	58	G13BB
	1.3 16 V	03.00-	58	G13BB
Grand Vitara II (JT)	1.6 Allrad	04.05-	78	M16A
Ignis (FH)	1.3	10.00-09.03	61	M13A
	1.3 4WD	10.00-09.03	61	M13A
Ignis II	1.3	09.03-	69	M13A
	1.3 4x4	09.03-	69	M13A
	1.5	09.03-	73	M15A
	1.5 4x4	09.03-	73	M15A
	1.5 Sport	12.03-	80	M15A
Jimny (FJ)	1.3 16V	02.01-	60	M13A
	1.3 16V 4WD	02.01-	60	M13A
	1.3 16V 4x4	08.05-	63	M13A
	1.3 4WD	05.14-	62	M13A
Liana (ER)	1.3	03.02-	66	M13A
	1.6	03.02-	76	M16A
	1.6	01.05-	79	M16A
	1.6 4WD	03.02-	76	M16A
	1.6 4WD	04.02-	78	M16A
	1.6 4WD	01.05-12.07	79	M16A
	1.6 i	04.02-	78	M16A
Liana Combi	1.3	07.01-12.07	66	M13A
	1.6	07.01-12.07	76	M16A
	1.6 4WD	07.01-12.07	76	M16A
	1.6 4WD	04.02-12.07	78	M16A
	1.6 4WD	01.05-12.07	79	M16A
	1.6 i	04.02-12.07	78	M16A
Swift Cabriolet	1.3 i	09.91-10.96	50	G13BA
Swift III (MZ, EZ)	1.3	02.05-	68	M13A
	1.3 4x4	01.06-	66	M13A
	1.3 4x4	02.05-	68	M13A
	1.5	02.05-	75	M15A
	1.6	05.06-	92	M16A
SX4 (EY, GY)	1.5	06.06-	73	M15A
	1.5 VVT	07.10-	82	M15A
	1.5 VVT 4x4	07.10-	82	M15A
	1.6 VVT	06.06-	79	M16A
	1.6 VVT	07.09-	88	M16A
	1.6 VVT 4x4	06.06-	79	M16A
	1.6 VVT 4x4	07.09-	82	M16A

< CP056

SUZUKI				
SX4 (EY, GY)	1.6 VVT 4x4	07.09-	88	M16A
SX4 Sedan (GY)	1.6	10.07-	79	M16A
	1.6 AWD	10.07-	88	M16A
Wagon R+ (MM)	1.3	05.00-12.04	56	G13BB
	1.3	09.03-	69	M13A
	1.3 4WD	10.01-	56	G13BB
	1.3 4WD	09.03-	69	M13A

CP057

pencil coil (CL917)

OEM-No.
SUBARU for coil 22433-AA451
for coil 22433-AA550

resistance: - kΩ
length: 77 mm

SUBARU				
Impreza CC	2.0 R AWD	01.08-	110	EJ204
Impreza Sedan (GD)	2.0 WRX STi AWD	11.01-	195	EJ207
	2.0 WRX Turbo	10.02-	160	EJ205
	2.0 WRX Turbo	12.02-	165	EJ205
Impreza S. Wagon	2.0 Turbo AWD	10.02-	160	EJ205
	2.0 WRX Turbo	12.02-	165	EJ205

CP058

rail coil (CL224)

OEM-No.
GM 12576464
for coil 12580538
for coil 12587426

resistance: - kΩ
length: 97 mm

FIAT				
Croma (194)	2.2 16V	06.05-	108	194 A1.000
OPEL (VAUXHALL)				
Astra G Cabriolet	2.2 16V	03.01-10.05	108	Z 22 SE
Astra G Caravan	2.2 16V	03.01-07.04	108	Z 22 SE
Astra G CC	2.2 16V	06.00-01.05	108	Z 22 SE
Astra G Coupe	2.2 16V	09.00-05.05	108	Z 22 SE
Astra G Sedan	2.2 16V	03.01-01.05	108	Z 22 SE
Speedster	2.2	09.00-	108	Z 22 SE
Vectra B	2.2 i 16V	09.00-04.02	108	Z 22 SE
Vectra B Caravan	2.2 i 16V	09.00-07.03	108	Z 22 SE
Vectra B CC	2.2 i 16V	09.00-07.03	108	Z 22 SE
Vectra C	2.2 16V	04.02-	108	Z 22 SE
Vectra C GTS	2.2 16V	08.02-	108	Z 22 SE
Zafira A (F75_)	2.2 16V	09.00-06.05	108	Z 22 SE

CP059

rail coil (CL229, CL230, CL232)

OEM-No.
GM for coil 90584336
for coil 90584337

resistance: - kΩ
length: 75 mm

OPEL (VAUXHALL)				
Omega B	2.6 V6	09.00-07.03	132	Y 26 SE
	3.2 V6	02.01-07.03	160	Y 32 SE
Omega B Caravan	2.6 V6	09.00-07.03	132	Y 26 SE
	3.2 V6	02.01-07.03	160	Y 32 SE
Signum	3.2 V6	05.03-	155	Z 32 SE
Vectra B	2.6 i V6	09.00-04.02	125	Y 26 SE
Vectra B Caravan	2.6 i V6	09.00-07.03	125	Y 26 SE
Vectra B CC	2.6 i V6	09.00-07.03	125	Y 26 SE
Vectra C	3.2 V6	08.02-	155	Z 32 SE
Vectra C Caravan	3.2 V6	10.03-	155	Z 32 SE
Vectra C GTS	3.2 V6	08.02-	155	Z 32 SE

CP060

rail coil (CL203)

OEM-No.
GM for coil 9119567
for coil 90536194

resistance: - kΩ
length: 52 mm

OPEL (VAUXHALL)				
Astra G Cabriolet	1.8 16V	03.01-10.05	92	Z18 XE
Astra G Caravan	1.8 16V	02.98-09.00	85	X18 XE1
	1.8 16V	09.00-07.04	92	Z18 XE
Astra G CC	1.8 16V	02.98-09.00	85	X18 XE1
	1.8 16V	09.00-01.05	92	Z18 XE
Astra G Coupe	1.8 16V	03.00-10.00	85	X18 XE1
	1.8 16V	09.00-05.05	92	Z18 XE
Astra G Sedan	1.8 16V	09.98-09.00	85	X18 XE1
	1.8 16V	06.00-01.05	92	Z18 XE
Astra H	1.8	03.04-	92	Z18 XE
Astra H Caravan	1.8	08.04-	92	Z18 XE
Astra H GTC	1.8	03.05-	92	Z18 XE
Astra H TwinTop	1.8	09.05-	92	Z18 XE
Corsa C	1.8	09.00-12.09	92	Z18 XE
Meriva	1.8	05.03-05.10	92	Z18 XE
Signum	1.8	05.03-	90	Z18 XE
Tigra TwinTop	1.8	06.04-	92	Z18 XE
Vectra B	1.8 i 16V	10.95-09.00	85	X18 XE1
	1.8 i 16V	09.00-04.02	92	Z18 XE
Vectra B Caravan	1.8 i 16V	11.96-09.00	85	X18 XE1
	1.8 i 16V	09.00-07.03	92	Z18 XE
Vectra B CC	1.8 i 16V	10.95-09.00	85	X18 XE1
	1.8 i 16V	09.00-07.03	92	Z18 XE
Vectra C	1.8	04.02-	81	Z18 XEL
	1.8 16V	04.02-	90	Z18 XE
Vectra C Caravan	1.8	10.03-	90	Z18 XE
Vectra C GTS	1.8 16V	08.02-	90	Z18 XE
Zafira A (F75_)	1.8 16V	04.99-09.00	85	X18 XE1
	1.8 16V	09.00-06.05	92	Z18 XE
SAAB				
9-3 (YS3F)	1.8 i	01.04-	90	Z18 XE
9-3 Combi (YS3F)	1.8 i	03.05-	90	Z18 XE

CP061

pencil coil (CL239)

OEM-No.
GM for coil 12629037

resistance: - kΩ
length: 55 mm

OPEL (VAUXHALL)				
Signum	2.8 V6 Turbo	09.05-	169	Z 28 NEL
	2.8 V6 Turbo	01.06-	184	Z 28 NET
Vectra C	2.8 V6 Turbo	08.05-	169	Z 28 NEL
	2.8 V6 Turbo	08.06-	184	Z 28 NET
	2.8 V6 Turbo	08.05-	188	Z 28 NET
Vectra C Caravan	2.8 V6 Turbo	08.05-	169	Z 28 NEL
	2.8 V6 Turbo	01.07-	184	Z 28 NET
	2.8 V6 Turbo	08.05-	188	Z 28 NET
	2.8 V6 Turbo	01.07-	206	Z 28 NET
Vectra C GTS	2.8 V6 Turbo	08.05-	169	Z 28 NEL
	2.8 V6 Turbo	08.06-	184	Z 28 NET
	2.8 V6 Turbo	08.05-	188	Z 28 NET
	2.8 V6 Turbo	08.06-	206	Z 28 NET
SAAB				
9-3 (YS3F)	2.8 Turbo V6	03.05-	184	LP9
	2.8 Turbo V6	12.07-	188	B284L
	2.8 Turbo V6 XWD	05.08-	206	B284R

CP061 ▶

< CP061

SAAB				
9-3 Cabriolet	2.8 Turbo V6	02.06-	184	LP9
	2.8 Turbo V6	12.07-	188	B284L
	2.8 Turbo V6	02.09-	203	B284R
	2.8 Turbo V6	02.09-	206	B284R
9-3 Combi	2.8 Turbo V6	03.05-	184	LP9
	2.8 Turbo V6	12.07-	188	B284L
	2.8 Turbo V6 XWD	05.08-	206	B284R

CP062

rail coil (CL221)

OEM-No.
GM for coil 10458316
OPEL for coil 1208021

resistance: - kΩ
length: 56 mm

ALFA ROMEO				
159 (939)	1.8 MPI	03.07-11.11	103	939 A4.000
	1.8 TBi	05.09-11.11	147	939 B1.000
159 Sportwagon	1.8 MPI	03.07-11.11	103	939 A4.000
	1.8 TBi	05.09-11.11	147	939 B1.000
FIAT				
Croma (194)	1.8 16V	12.05-	103	939 A4.000
Stilo (192)	1.6 16V	05.05-11.06	77	192 B3.000
OPEL (VAUXHALL)				
Astra G Cabriolet	1.6	01.03-10.05	76	Z16 XEP
Astra G Caravan	1.6	12.02-07.09	76	Z16 XEP
Astra G CC	1.6	12.02-12.09	76	Z16 XEP
Astra G Coupe	1.6 16V	03.00-05.05	76	Z16 XEP
Astra G Sedan	1.6	12.02-12.09	76	Z16 XEP
Astra H (L48)	1.6	03.04-	77	Z16 XE1/Z16 XEP
	1.6	12.06-	85	A 16 XER/Z16 XER
	1.6 Turbo	02.07-	132	Z16 LET
	1.8	01.06-	103	Z18 XER/A 18 XER
Astra H Caravan	1.6	08.04-	77	Z16 XE1/Z16 XEP
	1.6	12.06-	85	A 16 XER/Z16 XER
	1.6 Turbo	02.07-	132	Z16 LET
	1.8	08.05-	103	Z18 XER/A 18 XER
Astra H GTC	1.6	03.05-	77	Z16 XE1/Z16 XEP
	1.6	12.06-	85	Z16 XER
	1.6 Turbo	02.07-	132	Z16 LET
	1.8	01.06-	103	Z18 XER
Astra H TwinTop	1.6	09.05-	77	Z16 XE1/Z16 XEP
	1.6	12.06-	85	Z16 XER
	1.6 Turbo	02.07-	132	Z16 LET
	1.8	09.05-	103	Z18 XER/A 18 XER
Corsa D	1.6 Turbo	02.07-	110	Z16 LEL/A 16 LEL
	1.6 Turbo	02.07-	141	B16 LER/A16 LER
Insignia	1.6 Turbo	07.08-	132	A 16 LET
Insignia Caravan	1.6 Turbo	01.09-	132	A 16 LET
Insignia Sedan	1.6 Turbo	01.09-	132	A 16 LET
Meriva	1.6	01.06-05.10	77	Z16 XEP
	1.6 Turbo	09.05-05.10	132	Z16 LET
Signum	1.8	09.05-	103	Z18 XER
Vectra C	1.6	01.06-	77	Z16 XEP
	1.8	01.06-	103	Z18 XER
Vectra C Caravan	1.6	01.06-	77	Z16 XEP
	1.8	01.06-	103	Z18 XER
Vectra C GTS	1.6	01.06-	77	Z16 XEP
	1.8	01.06-	103	Z18 XER
Zafira B (A05)	1.6	07.05-	77	Z16 XE1/Z16 XEP
	1.6	01.08-	85	A 16 XER/Z16 XER
	1.6 CNG Turbo	02.09-	110	A 16 XNT/Z16 XNT
	1.8	07.05-	103	Z18 XER/A 18 XER
Zafira B Van	1.8	07.05-	103	Z18 XER/A 18 XER

CP063

rail coil (CL213, CL214, CL215, CL217)

OEM-No.
OPEL for coil 1208012
for coil 1208020
for coil 1208028
for coil 1208306

resistance: - kΩ
length: 75 mm

OPEL (VAUXHALL)				
Agila (A) (H00)	1.0	08.03-12.07	44	Z10 XEP
	1.0 12V	09.00-12.07	43	Z10 XE
	1.2 16V	09.00-12.07	55	Z12 XE
	1.2 16V Twinport	07.04-12.07	59	Z12 XEP
Astra G Caravan	1.2 16V	02.98-09.00	48	X12 XE
	1.2 16V	09.00-07.04	55	Z12 XE
	1.4	09.07-12.09	66	Z14 XEP
Astra G CC	1.2 16V	02.98-09.00	48	X12 XE
	1.2 16V	09.00-01.05	55	Z12 XE
	1.4	09.07-12.09	66	Z14 XEP
Astra G Sedan	1.2 16V	09.98-09.00	48	X12 XE
	1.2 16V	09.00-01.05	55	Z12 XE
	1.4	09.07-12.09	66	Z14 XEP
Astra H (L48)	1.2	08.05-	59	Z12 XEP
	1.4	03.04-	66	Z14 XEP
Astra H Caravan	1.4	08.04-	55	Z14 XEL
	1.4	08.04-	66	Z14 XEP
	1.4 LPG	08.09-	66	Z14 XEP
Astra H GTC	1.2	08.05-	59	Z12 XEP
	1.4	03.05-	66	Z14 XEP
Combo Tour	1.4	10.04-	66	Z14 XEP
Combo Van/Combi	1.4 16V	08.05-	66	Z14 XEP
Corsa B	1.0 i 12V	11.96-09.00	40	X10 XE
	1.2 i 16V	03.98-09.00	48	X12 XE
Corsa C	1.0	09.00-06.03	43	Z10 XE
	1.0	06.03-12.09	44	Z10 XEP
	1.2	09.00-12.09	55	Z12 XE
	1.2 Twinport	07.04-12.09	59	Z12 XEP
	1.4 Twinport	06.03-12.09	66	Z14 XEP
Corsa C Van	1.2	07.05-	59	Z12 XEP
	1.2 16V	09.00-	55	Z12 XE
	1.4	08.03-	66	Z14 XEP
Corsa D	1.0	07.06-	44	Z10 XEP
	1.2	07.06-	59	Z12 XEP
	1.2 LPG	09.09-	59	Z12 XEP
	1.4	07.06-	66	Z14 XEP
	1.4 LPG	07.06-	66	Z14 XEP
Corsa D Van	1.2	06.10-	51	A 12 XEL
	1.2	07.09-	59	Z12 XEP
	1.2	06.10-	63	A 12 XER
Meriva	1.4 16V Twinport	07.04-05.10	66	Z14 XEP
	1.4 16V Twinp. LPG	07.04-05.10	66	Z14 XEP
Tigra TwinTop	1.4	06.04-	66	Z14 XEP

CP064

pencil coil (CL718)

OEM-No.
CHRYSLER for coil 56029129AA
for coil 56029129AB

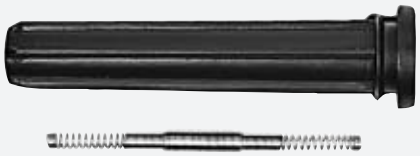

resistance: - kΩ
length: 110 mm

CHRYSLER				
300 C (LX)	5.7	01.06-12.08	250	EZH/EZD/EZB
	6.1 SRT8	06.05-11.12	317	ESF
300 C Touring	5.7	01.06-12.10	250	EZH/EZD/EZB
	5.7 AWD	04.05-12.10	250	EZH/EZB
	6.1 SRT8	06.05-12.10	317	ESF
JEEP				
Commander (XK)	5.7 V8 4x4	09.05-12.10	240	EZB

< CP064

JEEP				
Grand Cherokee III	5.7 V8 4x4	01.06-12.10	240	EZB
	6.1 SRT8 4x4	03.06-12.10	313	ESF

CP065

pencil coil (CL721)

OEM-No.
CHRYSLER for coil 4606869AA
for coil 4606869AB

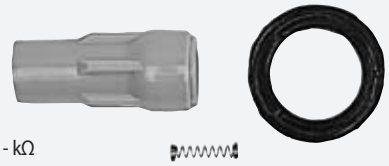

resistance: - kΩ
length: 47 mm

CHRYSLER				
300 C (LX)	2.7	01.07-11.12	130	EES
	2.7	01.06-11.12	142	2.7FX/EER
	3.5	01.06-11.12	183	3.5CSP
300 C Touring	2.7	01.07-12.10	130	EES
	2.7	01.06-12.10	142	2.7FX/EER
	3.5	01.06-12.10	183	3.5CSP/EEG
	3.5 AWD	01.06-12.10	183	3.5CSP
Sebring Cabriolet	2.7	07.07-12.10	137	EER
FIAT				
Freemont (JF_)	3.6	08.11-	206	ERB
	3.6 4x4	08.11-	206	ERB

CP066

coil is not in offer

OEM-No.
CHRYSLER for coil 4606824AB

resistance: - kΩ
length: 42 mm

CHRYSLER				
Sebring (JS)	2.0 VVT	07.07-12.10	115	ECN
	2.4 VVT	07.07-12.10	125	EDG/ED3
Sebring Cabriolet	2.4 VVT	07.07-12.10	125	ED3
JEEP				
Compass (MK49)	2.0	05.11-	115	ECN
	2.4	08.06-	125	ED3/ERZ
	2.4 4x4	09.06-	125	ED3/ERZ
Patriot (MK74)	2.4 4x4	01.08-	125	ED3

CP067

pencil coil (CL720, CL722)

OEM-No.
CHRYSLER for coil 4609088AF
for coil 4609088AH
for coil 4609095AG
for coil 4609095AI

resistance: - kΩ
length: 125 mm

CHRYSLER				
300 C (LX)	2.7	09.04-12.05	142	2.7FX/EER
	3.5	09.04-12.05	183	3.5CSP
300 C Touring	2.7	09.04-12.05	142	2.7FX/EER
	3.5	09.04-12.05	183	3.5CSP/EEG
	3.5 AWD	09.04-12.05	183	3.5CSP
300 M (LR)	2.7 V6 24V	11.98-08.00	149	EER
	2.7 V6 24V	08.00-09.04	150	EER
	3.5 V6 24V	08.00-09.04	185	EGG
	3.5 V6 24V	07.98-08.00	187	EGG
Concorde	2.7 LX	10.97-09.03	149	EER
	3.5 LX	10.97-09.03	174	EWZ
	3.5 LX Super	10.97-09.03	186	EWZ
Sebring (JR)	2.7 V6 24V	04.01-06.07	149	EER/EES

< CP067

CHRYSLER				
Sebring Cabriolet	2.7 V6 24V	04.01-06.07	149	EES

CP068

rail coil (CL104)

OEM-No.
PSA for coil 5963.21
for coil 5970.80
for coil 96363378

resistance: - kΩ
length: 65 mm

CITROEN				
Berlingo (B9)	1.6	04.08-	66	NFR (TU5JP4B)
	1.6	04.08-	80	NFU (TU5JP4)
Berlingo (MF)	1.6 16V	10.00-	80	NFU (TU5JP4)
Berlingo Van (B9)	1.6	04.08-	66	NFR (TU5JP4B)
	1.6	04.08-	80	NFU (TU5JP4)
Berlingo Van (M_)	1.6 16V	10.00-	80	NFU (TU5JP4)
C2 (JM_)	1.6	09.03-	80	NFU (TU5JP4)
	1.6 VTS	01.05-	90	NFS (TU5JP4S)
C3 I (FC_)	1.6 16V	02.02-	80	NFU (TU5JP4)
C3 Pluriel (HB_)	1.6	05.03-	80	NFU (TU5JP4)
C4 Coupe (LA_)	1.6 16V	11.04-07.11	80	NFU (TU5JP4)
C4 I (LC_)	1.6 16V	11.04-07.11	80	NFU (TU5JP4)
	1.6 16V Bio-Flex	09.07-07.08	80	NFU (TU5JP4)
Xsara (N1)	1.6 16V	09.00-03.05	80	NFU (TU5JP4)
Xsara Break (N2)	1.6 16V	09.00-08.05	80	NFU (TU5JP4)
Xsara Coupe (N0)	1.6 16V	09.00-03.05	80	NFU (TU5JP4)
Xsara Picasso (N68)	1.6 16V	09.05-	80	NFU (TU5JP4)
PEUGEOT				
1007 (KM_)	1.6 16V	04.05-	80	NFU (TU5JP4)
206 CC (2A/C)	1.6 16V	12.00-	80	NFU (TU5JP4)
206 CC (2D)	1.6 16V	09.00-	80	NFU (TU5JP4)
206 Sedan	1.6 16V	03.07-	80	NFU (TU5JP4)
206 SW (2E/K)	1.6 16V	07.02-	80	NFU (TU5JP4)
206+ (T3E)	1.6 16V	07.10-	80	NFU (TU5JP4)
207 (WA_, WC_)	1.6 16V	02.06-	80	NFU (TU5JP4)
307 (3A/C)	1.6 16V	08.00-	80	NFU (TU5JP4)
307 Break (3E)	1.6 16V	03.02-	80	NFU (TU5JP4)
307 CC (3B)	1.6 16V	02.05-	80	NFU (TU5JP4)
307 SW (3H)	1.6 16V	03.02-	80	NFU (TU5JP4)
308 (4A_, 4C_)	1.6 Bioflex	04.08-	80	NFU (TU5JP4)
308 SW	1.6 Bioflex	03.09-	82	NFU (TU5JP4)
Partner Combispace	1.6 16V	07.01-	80	NFU (TU5JP4)
Partner Tepee	1.6	04.08-	66	NFR (TU5JP4B)
	1.6	04.08-	80	NFU (TU5JP4)
Partner Van	1.6	04.08-	66	NFR (TU5JP4B)
	1.6	04.08-	80	NFU (TU5JP4)

CP069

rail coil (CL110, CL111, CL120)

OEM-No.
PSA for coil 5970.74

resistance: - kΩ
length: 80 mm

CITROEN				
Berlingo (MF)	1.4 i	06.98-	55	KFX/KFW
Berlingo Van (M_)	1.4 i	06.98-	55	KFX/KFW
C2 (JM_)	1.1	09.03-	44	HFX (TU1JP)
	1.4	09.03-	54	KFV (TU3JP)
C3 I (FC_)	1.1 i	02.02-	44	HFX
	1.4 16V	12.03-	65	KFU (ET3J4)
	1.4 i Bivalent	02.02-	54	KFV (TU3JP)
C3 II	1.1	11.09-	44	HFX (TU1JP)
	1.4	11.09-	54	KFT/KFV (TU3A)
C3 Pluriel (HB_)	1.4	05.03-	54	KFV (TU3JP)
Nemo Combi	1.4	04.09-	54	KFT/KFV (TU3A)
Nemo Van (AA_)	1.4	02.08-	54	KFV (TU3A)
Saxo (S0, S1)	1.1 X,SX	05.96-09.03	40	HDZ (TU1M)

CP069 ▶

< CP069

CITROEN				
Saxo (S0, S1)	1.1 X,SX	09.00-09.03	44	HFX (TU1JP)
	1.4 VTS	02.98-06.03	55	KFX/KFW
	1.6	06.98-06.03	66	NFZ (TU5JP)
	1.6	02.01-04.04	74	NFT
	1.6 VTL,VTR	06.98-06.03	65	NFZ (TU5JP)
	1.6 VTS	09.00-09.03	72	NFT
	1.6 VTS	06.96-09.03	87	NFX (TU5JP4)
Xsara (N1)	1.4 i	04.97-03.05	55	KFX (TU3JP)
	1.6 i	04.97-09.00	65	NFZ (TU5JP)
Xsara Break (N2)	1.4 i	10.97-08.05	55	KFX (TU3JP)
	1.6 i	10.97-09.00	65	NFZ (TU5JP)
Xsara Coupe (N0)	1.4 i	03.98-03.05	55	KFX/KFW (TU3JP)
PEUGEOT				
106 II (1)	1.1 i	06.00-	40	HDY (TU1M)
	1.1 i	05.96-	44	HFX (TU1JP)
	1.4 i	06.97-	55	KFX/KFW (TU3JP)
1007 (KM_)	1.4	04.05-	54	KFV (TU3JP)
206 CC (2A/C)	1.1 i	09.98-	44	HFZ/HFX (TU1JP)
	1.4 i	09.98-02.09	55	KFX/KFW (TU3JP)
	1.6 i	09.98-12.00	65	NFZ (TU5JP)
206 Sedan	1.4	03.07-	55	KFV/KFW
206 SW (2E/K)	1.1	07.02-	44	HFX (TU1JP)
	1.4	07.02-	55	KFV/KFW
	1.4 16V	10.03-	65	KFU (ET3J4)
206+ (T3E)	1.1	01.09-	44	HFX
	1.4 i	01.09-	55	KFV/KFW (TU3A)
207 (WA_, WC_)	1.4	02.06-	53	KFV (TU3A)
207 SW (WK_)	1.4	06.07-	54	KFV (TU3A)
306 (7B, N3, N5)	1.4 SL	06.94-05.01	55	KDX/KFX/KFW
	1.6	10.00-05.01	72	NFT
	1.6 SR	07.98-10.00	65	NFZ (TU5JP)
306 Break	1.4	03.97-04.02	55	KFX/KFW (TU3JP)
	1.6	07.98-10.00	65	NFZ (TU5JP)
	1.6	10.00-04.02	72	NFT
306 Cabriolet	1.6	10.00-04.02	72	NFT
306 CC	1.4	06.97-05.01	55	KDX/KFX/KFW
	1.6	10.00-05.01	72	NFT
307 (3A/C)	1.4	08.00-	55	KFW (TU3JP)
307 Break (3E)	1.4 16V	11.03-	65	KFU (ET3J4)
307 SW (3H)	1.4 16V	11.03-	65	KFU (ET3J4)
Bipper (AA_)	1.4	02.08-	54	KFV (TU3A)
Bipper Tepee	1.4	04.08-	54	KFV (TU3A)
Partner Combispace	1.4	09.00-	55	KFX/KFW
Partner Van (5)	1.4 BiFuel	04.03-	55	KFW (TU3JP)

CP070

pencil coil (CL321, CL800)

OEM-No.
FIAT for coil 46794782
LADA for coil 21120370501010

resistance: - kΩ
length: 63 mm

ALFA ROMEO				
156 (932)	2.0 JTS	03.02-09.05	122	937 A1.000
156 Sportwagon	2.0 JTS	03.02-05.06	122	937 A1.000
159 (939)	1.9 JTS	09.05-11.11	118	939 A6.000
159 Sportwagon	1.9 JTS	03.06-11.11	118	939 A6.000
GT (937)	2.0 JTS	12.06-09.10	119	932 A2.000
	2.0 JTS	11.03-09.10	121	932 A2._/937 A1._
GTV (916C_)	2.0 JTS	04.03-10.05	121	937 A1.000
Spider (916S_)	2.0 JTS	04.03-04.05	121	937 A1.000
LADA (VAZ)				
110	1.6 16V	10.04-12.10	67	VAZ-21124
Granta (2190)	1.6	10.11-	72	VAZ-21126
	1.6	07.13-	78	VAZ-21127
Kalina Hatch. (1119)	1.4 16V	11.08-	66	VAZ-11194
	1.4 16V LPG	11.08-	65	VAZ-11194
	1.6 16V	10.04-	66	

< CP070

LADA (VAZ)				
Kalina Hatch. (2192)	1.6	06.13-	78	VAZ-21127
Kalina Combi (1117)	1.4 16V	11.08-	66	VAZ-11194
	1.4 16V LPG	11.08-	65	VAZ-11194
Kalina Combi (2194)	1.6	11.13-	78	VAZ-21127
Kalina Sedan (1118)	1.4 16V	11.08-	66	VAZ-11194
	1.4 16V LPG	11.08-	65	VAZ-11194
	1.6 16V	10.04-	66	
Priora CC (2172)	1.6	12.08-	72	VAZ-21126
	1.6	02.14-	78	VAZ-21127
	1.6 LPG	12.08-	71	VAZ-21126
Priora Combi (2171)	1.6	10.09-	60	VAZ-21703
	1.6	10.09-	72	VAZ-21126
	1.6	02.14-	78	VAZ-21127
Priora Sedan (2170)	1.6	12.08-	72	VAZ-21126
	1.6	02.14-	78	VAZ-21127
	1.6 LPG	03.09-	71	

CP071

rail coil (CL218)

OEM-No.
Opel for coil 6235037
for coil 90424480
for coil 9198834

resistance: - kΩ
length: 96 mm

OPEL (VAUXHALL)				
Astra G Cabriolet	2.0 16V Turbo	11.02-10.05	147	Z 20 LET
	2.0 OPC	03.02-10.05	141	Z 20 LET
Astra G Caravan	2.0 OPC	09.02-07.04	141	Z 20 LET
	2.0 OPC	11.02-07.04	147	Z 20 LET
Astra G CC	2.0 OPC	09.02-01.05	141	Z 20 LET
	2.0 OPC	11.02-01.05	147	Z 20 LET
Astra G Coupe	2.0 16V Turbo	09.00-08.01	140	Z 20 LET
	2.0 16V Turbo	08.01-05.05	141	Z 20 LET
	2.0 16V Turbo	11.02-05.05	147	Z 20 LET
Astra H (L48)	2.0 Turbo	03.04-	125	Z 20 LEL
	2.0 Turbo	09.04-	147	Z 20 LER
	2.0 Turbo	03.05-	177	Z 20 LEH
Astra H Caravan	2.0 Turbo	08.04-	125	Z 20 LEL
	2.0 Turbo	09.04-	147	Z 20 LER
Astra H GTC	2.0 Turbo	03.05-	147	Z 20 LER
	2.0 Turbo	03.05-	125	Z 20 LEL
	2.0 Turbo	08.05-	177	Z 20 LEH
Astra H TwinTop	2.0 Turbo	09.05-	125	Z 20 LEL
	2.0 Turbo	09.05-	147	Z 20 LER
Speedster	2.0 Turbo	04.03-	147	Z 20 LET
Zafira A (F75_)	2.0 OPC	09.01-06.05	141	Z 20 LET
	2.0 OPC	11.02-06.05	147	Z 20 LET/Z 20 LER
Zafira B (A05)	2.0	07.05-	147	Z 20 LER
	2.0	01.06-	177	Z 20 LEH

CP072

pencil coil (CL310)

OEM-No.
Fiat for coil 46777288
for coil G226355246099

resistance: - kΩ
length: 66 mm

ALFA ROMEO				
Mito (955)	1.4	03.11-	57	955 A1.000
	1.4	09.08-	58	955 A1.000
	1.4	09.08-	70	199 A6.000
FIAT				
500 (312)	0.9	12.13-	44	312 A4._/312 A6._
	0.9	09.12-	48	312 A4.000
	1.4	10.07-	74	169 A3.000
500 C (312)	0.9	09.12-	48	312 A4.000

< CP072

FIAT				
500 C (312)	1.4	09.09-	74	169 A3.000
	1.4	09.11-	75	169 A3.000
500L	1.4	09.12-	70	843 A1.000
Bravo II (198)	1.4	04.07-	66	192 B2.000
	1.4 LPG	11.09-	66	192 B2.000
Doblo Flatbed (263)	1.4	04.10-	70	843 A1.000
Doblo MPV (152, 263)	1.4	02.10-	70	843 A1.000
Doblo Van/Combi	1.4	02.10-	70	843 A1.000
Ducato Van (250)	3.0 Natural Power	04.09-	100	F1CFA_/F1CE_
Grande Punto (199)	1.4 16V	10.05-	70	199 A6.000
Idea	1.2 16V	01.04-	59	188 A5.000
	1.4	12.03-	66	192 B2.000
	1.4 16V	01.04-	70	843 A1.000
Panda (169)	1.4	10.06-	74	169 A3.000
Panda (312)	0.9	12.13-	44	312 A4._/312 A6._
	0.9	02.12-	48	312 A4.000
Panda Van (312)	0.9	02.12-	48	312 A4.000
Punto (188)	1.4	09.03-	70	843 A1.000
	1.4	11.05-	71	199 A6.000
Stilo (192)	1.2 16V	02.02-11.06	59	188 A5.000
	1.4 16V	01.04-11.06	70	843 A1.000
	1.4 16V	03.05-11.06	66	192 B2.000
Stilo Multi Wagon	1.4 16V	01.04-08.08	70	843 A1.000
	1.4 16V	03.05-08.08	66	192 B2.000
LANCIA				
Musa (350)	1.4	10.07-	66	192 B2.000
	1.4	10.04-	70	843 A 1.000
Ypsilon (843)	1.2	10.03-12.11	59	188 A5.000
	1.4 16V	10.03-12.11	70	843 A 1.000

CP073

rail coil (CL112, CL127, CL133, CL139, CL141)

OEM-No.

PSA for coil 5970.56
for coil 5970.81
for coil 5970.84
for coil 5970.92
for coil 9634131480

resistance: - kΩ
length: 73 mm

CITROEN				
C4 Coupe (LA_)	2.0 16V	11.04-07.07	100	RFN (EW10J4)
	2.0 16V	11.04-12.10	130	RFK (EW10J4S)
C4 I (LC_)	2.0 16V	11.04-07.07	100	RFN (EW10J4)
	2.0 16V	11.04-07.08	130	RFK (EW10J4S)
C5 I (DC_)	1.8 16V	03.01-08.04	85	6FZ (EW7J4)
	2.0 16V	03.01-08.04	100	RFN (EW10J4)
C5 I Break (DE_)	1.8 16V	06.01-08.04	85	6FZ (EW7J4)
	2.0 16V	06.01-08.04	100	RFN (EW10J4)
C5 II (RC_)	1.8 16V	09.04-	85	6FZ (EW7J4)
C5 II Break (RE_)	1.8 16V	09.04-	85	6FZ (EW7J4)
C8 (EA_, EB_)	2.0	07.02-	100	RFN (EW10J4)
	2.2	07.02-	116	3FZ (EW12J4)
Evasion (22, U6)	2.0 16V	05.00-07.02	100	RFN (EW10J4)
Jumpy (U6U)	2.0	04.00-12.06	100	RFN (EW10J4)
	2.0 i 16V	03.00-	102	
Jumpy Van	2.0 i 16V	03.00-	102	RFN (EW10J4)
Saxo (S0, S1)	1.6	02.96-04.04	88	NFX (TU5JP4)
	1.6 VTS	06.96-09.03	87	NFX (TU5JP4)
Xsara (N1)	2.0 16V	09.00-03.05	100	RFN (EW10J4)
Xsara Break (N2)	2.0 16V	09.00-08.05	100	RFN (EW10J4)
Xsara Coupe (N0)	2.0 16V	09.00-03.05	100	RFN (EW10J4)
Xsara Picasso (N68)	1.8 16V	02.00-	85	6FZ (EW7J4)
	2.0 16V	01.03-	100	RFN (EW10J4)
FIAT				
Scudo Combinato	2.0 16V	06.00-12.06	100	RFN (EW10J4)
Scudo Van (220L)	2.0	05.00-12.06	100	RFN (EW10J4)
Ulysse (179AX)	2.0	08.02-06.11	100	RFN (EW10J4)
Ulysse (220)	2.0 16V	09.00-08.02	100	RFN (EW10J4)

< CP073

PEUGEOT				
106 II (1)	1.6 S16	05.96-	87	NFX (TU5J4)
206 CC (2A/C)	2.0 RC	07.03-	130	RFK (EW10J4S)
	2.0 S16	04.99-10.00	99	RFR (DEW10J4)
	2.0 S16	06.99-	100	RFN (EW10J4)
206 CC (2D)	2.0 S16	09.00-	100	RFN (EW10J4)
206 SW (2E/K)	2.0 16V	07.02-	100	RFN (EW10J4)
307 (3A/C)	2.0 16V	08.00-	100	RFN (EW10J4)
	2.0 16V	06.05-	130	RFK (EW10J4S)
307 Break (3E)	2.0	03.02-	100	RFN (EW10J4)
	2.0 16V	06.05-	130	RFK (EW10J4S)
307 CC (3B)	2.0 16V	10.03-	100	RFN (EW10J4)
	2.0 16V	10.03-	130	RFK (EW10J4S)
307 SW (3H)	2.0 16V	03.02-	100	RFN (EW10J4)
406 (8B)	1.8 16V	10.00-05.04	85	6FZ (EW7J4)
	2.0 16V	01.99-08.00	99	RFR (DEW10J4)
	2.0 16V	08.00-06.04	100	RFN (EW10J4)
	2.2	07.00-05.04	116	3FZ (EW12J4)
406 Break (8E/F)	1.8 16V	10.00-10.04	85	6FZ (EW7J4)
	2.0 16V	01.99-10.00	99	RFR (DEW10J4)
	2.0 16V	10.00-10.04	100	RFN (EW10J4)
	2.2	07.00-10.04	116	3FZ (EW12J4)
406 Coupe (8C)	2.0 16V	01.99-10.00	99	RFR (DEW10J4)
	2.0 16V	10.00-12.04	100	RFN (EW10J4)
	2.2	03.02-12.04	116	3FZ (EW12J4)
407 (6D_)	1.8	05.04-	85	6FZ (EW7J4)
	2.0	05.04-	100	RFN (EW10J4)
	2.2	05.04-	116	3FZ (EW12J4)
407 Coupe (6C_)	2.2 16V	10.05-	120	3FY (EW12J4)
407 SW (6E_)	1.8	05.04-	85	6FZ (EW7J4)
	2.0	05.04-	100	RFN (EW10J4)
	2.2	05.04-	116	3FZ (EW12J4)
607 (9D, 9U)	2.0	02.00-	100	RFN (EW10J4)
	2.2 16V	02.00-	116	3FZ (EW12J4)
806 (221)	2.0 16V	09.00-08.02	100	RFN (EW10J4)
807 (E)	2.0	06.02-	100	RFN (EW10J4)
	2.2	06.02-	116	3FZ (EW12J4)
Expert (224)	2.0	07.00-	100	RFN (EW10J4)
Expert Van (222)	2.0	09.02-	100	RFN (EW10J4)

Summary HP / kW
Переводная таблица л.с. / kW
Přehled HP / kW

HP	kW
1	0,74
30	22,06
35	25,74
40	29,42
45	33,09
50	36,77
55	40,45
60	44,13
65	47,80
70	51,48
75	55,16
80	58,84
85	62,51
90	66,19
95	69,87
100	73,55
105	77,22
110	80,90
115	84,58
120	88,26
125	91,93
130	95,61
135	99,29
140	102,97
145	106,64
150	110,32
155	114,00
160	117,68
165	121,35
170	125,03
175	128,71
180	132,39
185	136,06
190	139,74
195	143,42
200	147,10
205	150,77
210	154,45
215	158,13
220	161,81
225	165,48
230	169,16
235	172,84
240	176,52
245	180,19
250	183,87
255	187,55
260	191,23
265	194,90
270	198,58
275	202,26

kW	HP
1	1,36
20	27,19
25	33,99
30	40,78
35	47,58
40	54,38
45	61,18
50	67,98
55	74,77
60	81,57
65	88,37
70	95,17
75	101,97
80	108,77
85	115,56
90	122,36
95	129,16
100	135,96
105	142,76
110	149,55
115	156,35
120	163,15
125	169,95
130	176,75
135	183,54
140	190,34
145	197,14
150	203,94
155	210,74
160	217,53
165	224,33
170	231,13
175	237,93
180	244,73
185	251,53
190	258,32
195	265,12
200	271,92
205	278,72
210	285,52
215	292,31
220	299,11
225	305,91
230	312,71
235	319,51
240	326,30
245	333,10
250	339,90
255	346,70
260	353,50
265	360,29

HP = л.с.
kW = кВт

Ignition coils – cross references
Катушки зажигания – таблицы сравнения
Zapalovací cívky – srovnávací tabulky

ALFA ROMEO	TESLA
46467542	CL318
46469863	CL305
46755605	CL307
46794782	CL321
55212624	CL324
60558152	CL302
60562701	CL320
60586072	CL319
60805420	CL300
60809492	CL300
60809606	CL302
60810690	CL320
71739702	CL226
71739725	CL221
76487970	CL302
7793212	CL306

BBT	TESLA
IC01100	CL121
IC01101	CL410
IC01102	CL119
IC02101	CL625
IC03100	CL001
IC03101	CL003
IC03102	CL005
IC03103	CL014
IC03104	CL002
IC03105	CL018
IC03106	CL004
IC03108	CL006
IC03109	CL019
IC03109	CL318
IC03111	CL015
IC03112	CL022
IC03113	CL010
IC03114	CL007
IC03115	CL021
IC03118	CL023
IC03119	CL028
IC03120	CL020
IC03121	CL034
IC03122	CL009
IC03123	CL016
IC03124	CL029
IC03125	CL024
IC03127	CL031
IC03128	CL032
IC04100	CL613
IC04101	CL611
IC04102	CL604
IC04104	CL609
IC04105	CL612
IC04106	CL607
IC04107	CL616
IC04108	CL606
IC04109	CL605
IC04110	CL610
IC04111	CL617
IC04112	CL618
IC04113	CL622
IC04114	CL621
IC04115	CL627
IC04118	CL628
IC04119	CL629
IC06100	CL710
IC06101	CL705
IC07100	CL207
IC07101	CL206

BBT	TESLA
IC07102	CL202
IC07103	CL205
IC07104	CL200
IC07105	CL203
IC07106	CL213
IC07107	CL214
IC07108	CL218
IC07109	CL221
IC07110	CL219
IC07111	CL210
IC07112	CL222
IC07113	CL209
IC07115	CL215
IC07116	CL229
IC07117	CL230
IC07118	CL224
IC07119	CL212
IC07120	CL232
IC07121	CL223
IC07122	CL217
IC07123	CL233
IC07125	CL240
IC07127	CL237
IC09101	CL615
IC09102	CL601
IC09103	CL600
IC09107	CL602
IC09108	CL603
IC09109	CL619
IC09110	CL624
IC09111	CL623
IC09113	CL626
IC10101	CL305
IC10102	CL307
IC10103	CL306
IC10104	CL321
IC10105	CL320
IC10106	CL319
IC11100	CL201
IC11101	CL211
IC11102	CL220
IC11103	CL204
IC11104	CL225
IC12101	CL700
IC12102	CL702
IC13100	CL300
IC13101	CL304
IC13102	CL308
IC13103	CL316
IC13104	CL315
IC13105	CL312
IC13106	CL301
IC13107	CL310
IC13110	CL317
IC13111	CL311
IC13112	CL302
IC13113	CL314
IC13114	CL309
IC13115	CL326
IC13116	CL323
IC15100	CL100
IC15101	CL106
IC15103	CL107
IC15105	CL113
IC15107	CL103
IC15108	CL128
IC15109	CL108

BBT	TESLA
IC15110	CL114
IC15111	CL109
IC15112	CL122
IC15113	CL124
IC15114	CL129
IC15115	CL118
IC15116	CL101
IC15116	CL137
IC15117	CL102
IC15118	CL123
IC15119	CL131
IC15120	CL116
IC15121	CL127
IC15123	CL132
IC15124	CL140
IC15125	CL135
IC15126	CL104
IC15127	CL141
IC15128	CL112
IC15129	CL133
IC15130	CL138
IC15131	CL139
IC15133	CL105
IC15135	CL150
IC15136	CL115
IC15138	CL152
IC15140	CL151
IC15141	CL153
IC15142	CL155
IC15143	CL157
IC15144	CL158
IC16100	CL500
IC16101	CL501
IC16102	CL508
IC16103	CL535
IC16104	CL536
IC16105	CL538
IC16106	CL537
IC16107	CL509
IC16108	CL547
IC16109	CL557
IC16110	CL505
IC16111	CL510
IC16112	CL511
IC16113	CL554
IC16114	CL521
IC16115	CL522
IC16116	CL550
IC16117	CL532
IC16118	CL541
IC16119	CL529
IC16120	CL531
IC16121	CL544
IC16123	CL556
IC16124	CL566
IC16125	CL534
IC16126	CL912
IC16127	CL592
IC16128	CL911
IC16129	CL900
IC16131	CL584
IC16132	CL903
IC16133	CL904
IC16134	CL595
IC16141	CL926
IC17100	CL506
IC17101	CL519

BBT	TESLA
IC17102	CL513
IC17103	CL580
IC17104	CL568
IC17105	CL571
IC17106	CL577
IC17107	CL575
IC17108	CL502
IC17109	CL503
IC17110	CL525
IC17111	CL526
IC17112	CL514
IC17113	CL520
IC17114	CL515
IC17115	CL564
IC17116	CL528
IC17117	CL527
IC17119	CL551
IC17120	CL524
IC17121	CL546
IC17122	CL565
IC17123	CL555
IC17124	CL572
IC17126	CL905
IC17127	CL910
IC17130	CL581
IC17131	CL579
IC17132	CL542
IC18100	CL400
IC18101	CL401
IC18103	CL408
IC18104	CL405
IC18105	CL406
IC18106	CL403
IC18107	CL407
IC18108	CL404
IC18109	CL409
ZK15102	CL110
ZK15104	CL130
ZK15106	CL111
ZK15122	CL134
ZK15132	CL120
ZK15134-075	CL149
ZK15137	CL117

BERU	TESLA
0040100014	CL601
0040100016	CL004
0040100029	CL312
0040100031	CL625
0040100037	CL020
0040100041	CL616
0040100043	CL033
0040100052	CL100
0040100053	CL618
0040100068	CL702
0040100077	CL622
0040100079	CL309
0040100127	CL208
0040100231	CL106
0040100234	CL302
0040100241	CL127
0040100242	CL128
0040100243	CL102
0040100244	CL304
0040100245	CL103
0040100246	CL101
0040100247	CL108
0040100248	CL308

BERU	TESLA
0040100249	CL109
0040100250	CL122
0040100251	CL118
0040100252	CL205
0040100253	CL206
0040100254	CL136
0040100255	CL137
0040100256	CL113
0040100257	CL114
0040100258	CL129
0040100259	CL202
0040100261	CL525
0040100262	CL515
0040100263	CL508
0040100264	CL502
0040100265	CL526
0040100266	CL523
0040100267	CL503
0040100268	CL539
0040100269	CL528
0040100270	CL527
0040100274	CL559
0040100275	CL501
0040100276	CL500
0040100277	CL509
0040100278	CL560
0040100279	CL506
0040100281	CL400
0040100282	CL543
0040100283	CL300
0040100295	CL604
0040100296	CL609
0040100297	CL605
0040100298	CL612
0040100299	CL613
0040100300	CL219
0040100301	CL210
0040100304	CL607
0040100306	CL222
0040100307	CL615
0040100308	CL404
0040100309	CL305
0040100310	CL317
0040100311	CL318
0040100315	CL123
0040100317	CL124
0040100318	CL125
0040100319	CL126
0040100320	CL301
0040100321	CL311
0040100322	CL310
0040100323	CL105
0040100324	CL602
0040100325	CL150
0040100337	CL521
0040100338	CL215
0040100339	CL614
0040100340	CL606
0040100341	CL107
0040100342	CL203
0040100343	CL140
0040100344	CL207
0040100345	CL131
0040100346	CL132
0040100347	CL135
0040100348	CL112
0040100349	CL115

BERU > TESLA ▶

Ignition coils – cross references
Катушки зажигания – таблицы сравнения
Zapalovací cívky – srovnávací tabulky

BERU	TESLA
0040100350	CL401
0040100351	CL133
0040100352	CL138
0040100353	CL139
0040100354	CL116
0040100356	CL513
0040100358	CL213
0040100359	CL217
0040100361	CL307
0040100372	CL411
0040100381	CL110
0040100394	CL712
0040100395	CL802
0040100396	CL713
0040100432	CL720
0040100501	CL711
0040100502	CL708
0040100511	CL558
0040100532	CL569
0040102002	CL620
0040102013	CL030
0040102019	CL121
0040102020	CL315
0040102021	CL510
0040102025	CL201
0040102026	CL200
0040102029	CL010
0040102030	CL003
0040102031	CL022
0040102032	CL015
0040102033	CL011
0040102037	CL119
0040102039	CL008
0040102039	CL009
0040102040	CL007
0040102043	CL005
0040102044	CL016
0040102045	CL104
0040102046	CL141
0040102047	CL111
0040102048	CL120
0040102055	CL410
0040102056	CL554
0040102061	CL029
0040102062	CL017
0040102063	CL023
0040102065	CL024
0040102066	CL152
0040102067	CL031
0040102071	CL536
0040102073	CL535
0040102076	CL913
0040102079	CL915
0040102137	CL032
0040103007	CL611
0040104100	CL149
0040402001	CL001
0040402002	CL019
0040402003	CL002
0040402004	CL021
0040402007	CL006
0040402008	CL026
0040402009	CL014
0040402010	CL540
0040402011	CL519
ZS090	CL325
ZS538	CL626

BERU	TESLA
ZSE001	CL001
ZSE003	CL002
ZSE007	CL006
ZSE009	CL014
ZSE012	CL620
ZSE016	CL004
ZSE029	CL010
ZSE030	CL003
ZSE031	CL009
ZSE033	CL011
ZSE039	CL008
ZSE040	CL007
ZSE043	CL005
ZSE051	CL034
ZSE093	CL629
BMW	**TESLA**
1404309	CL600
1703227	CL600
1703360	CL601
1703825	CL600
1712223	CL602
1720166	CL601
1726176	CL601
1726177	CL601
1726178	CL601
1726178B	CL601
1730765	CL601
1731134	CL601
1731178B	CL601
1748017	CL600
1748018	CL600
1748394	CL601
1777666	CL601
7551260	CL602
7619385	CL626
7838388	CL624
78428001	CL624
761938505	CL626
784175401	CL624
864746301	CL626
12131247281	CL615
12131317232	CL601
12131402440	CL601
12131402713	CL601
12131404102	CL601
12131404309	CL600
12131703227	CL600
12131703228	CL600
12131703359	CL601
12131703825	CL600
12131712219	CL602
12131712223	CL602
12131720166	CL601
12131726176	CL601
12131726177	CL601
12131726178	CL601
12131727108	CL601
12131729842	CL601
12131730765	CL601
12131730766	CL601
12131731134	CL601
12131731884	CL601
12131734468	CL601
12131748017	CL600
12131748018	CL600
12131748394	CL601
12131748395	CL601

BMW	TESLA
12131777666	CL601
12137523345	CL623
12137548553	CL623
12137551260	CL602
12137562744	CL603
12137571643	CL603
12137571644	CL619
12137582627	CL619
12137594935	CL619
12137594936	CL623
12137619385	CL626
12137703359	CL601
12137838388	CL624
12137841754	CL624
12139066468	CL601
BOSCH	**TESLA**
0 221 119 023	CL228
0 221 122 399	CL018
0 221 502 002	CL514
0 221 502 429	CL609
0 221 502 431	CL614
0 221 502 433	CL612
0 221 502 435	CL613
0 221 503 001	CL219
0 221 503 002	CL210
0 221 503 010	CL209
0 221 503 014	CL213
0 221 503 015	CL214
0 221 503 017	CL222
0 221 503 022	CL607
0 221 503 024	CL106
0 221 503 025	CL107
0 221 503 026	CL229
0 221 503 027	CL230
0 221 503 031	CL223
0 221 503 033	CL610
0 221 503 035	CL605
0 221 503 407	CL302
0 221 503 457	CL319
0 221 503 465	CL803
0 221 503 468	CL218
0 221 503 469	CL226
0 221 503 471	CL217
0 221 503 472	CL215
0 221 503 473	CL232
0 221 503 485	CL403
0 221 503 487	CL406
0 221 503 489	CL615
0 221 503 490	CL409
0 221 504 001	CL617
0 221 504 006	CL317
0 221 504 014	CL318
0 221 504 017	CL521
0 221 504 019	CL522
0 221 504 020	CL542
0 221 504 024	CL323
0 221 504 030	CL153
0 221 504 035	CL325
0 221 504 036	CL326
0 221 504 456	CL320
0 221 504 460	CL311
0 221 504 461	CL800
0 221 504 464	CL602
0 221 504 465	CL623
0 221 504 470	CL603
0 221 504 471	CL619
0 221 504 473	CL800

BOSCH	TESLA
0 221 505 423	CL404
0 221 505 437	CL611
0 221 506 002	CL606
0 221 506 444	CL604
0 221 601 012	CL119
0 221 603 003	CL028
0 221 603 010	CL002
0 221 604 006	CL407
0 221 604 008	CL121
0 221 604 010	CL410
0 221 604 014	CL554
0 221 604 024	CL413
0 221 604 032	CL629
0 221 604 103	CL321
0 221 604 109	CL011
0 986 221 000	CL001
0 986 221 001	CL100
0 986 221 002	CL019
0 986 221 003	CL312
0 986 221 004	CL502
0 986 221 005	CL523
0 986 221 006	CL519
0 986 221 007	CL616
0 986 221 008	CL503
0 986 221 010	CL508
0 986 221 011	CL004
0 986 221 012	CL525
0 986 221 014	CL033
0 986 221 015	CL021
0 986 221 016	CL625
0 986 221 017	CL020
0 986 221 018	CL515
0 986 221 020	CL528
0 986 221 023	CL003
0 986 221 024	CL005
0 986 221 025	CL128
0 986 221 026	CL102
0 986 221 027	CL304
0 986 221 028	CL308
0 986 221 029	CL109
0 986 221 030	CL136
0 986 221 031	CL137
0 986 221 032	CL509
0 986 221 033	CL123
0 986 221 034	CL110
0 986 221 035	CL111
0 986 221 036	CL130
0 986 221 037	CL313
0 986 221 038	CL316
0 986 221 039	CL202
0 986 221 040	CL618
0 986 221 042	CL301
0 986 221 044	CL711
0 986 221 046	CL150
0 986 221 100	CL628
0 986 JG1 211	CL510
0 986 JG1 212	CL511
0 986 JG1 224	CL586
0 986 JG1 225	CL585
1 227 030 059	CL306
1 227 030 062	CL305
1 227 030 071	CL307
1 227 030 082	CL601
9 220 081 505	CL122
F 000 ZS0 001	CL208
F 000 ZS0 103	CL300
F 000 ZS0 111	CL206

BOSCH	TESLA
F 000 ZS0 112	CL205
F 000 ZS0 113	CL114
F 000 ZS0 114	CL108
F 000 ZS0 115	CL118
F 000 ZS0 116	CL501
F 000 ZS0 117	CL513
F 000 ZS0 121	CL568
F 000 ZS0 211	CL802
F 000 ZS0 212	CL400
BOUGICORD	**TESLA**
151401	CL130
151402	CL117
151405	CL134
151406	CL149
151408	CL150
154301	CL110
154302	CL111
154303	CL120
155001	CL317
155002	CL306
155003	CL213
155004	CL604
155005	CL318
155006	CL307
155007	CL702
155009	CL405
155010	CL401
155011	CL400
155012	CL010
155013	CL128
155014	CL102
155015	CL123
155016	CL116
155017	CL300
155018	CL136
155019	CL137
155020	CL310
155021	CL135
155022	CL214
155023	CL311
155024	CL710
155025	CL124
155026	CL001
155027	CL112
155028	CL520
155029	CL215
155030	CL132
155031	CL133
155032	CL104
155033	CL107
155034	CL106
155035	CL522
155036	CL610
155037	CL521
155038	CL203
155039	CL221
155040	CL138
155041	CL139
155042	CL140
155043	CL141
155044	CL404
155045	CL217
155046	CL218
155047	CL508
155048	CL201
155049	CL602
155050	CL131

Ignition coils – cross references
Катушки зажигания – таблицы сравнения
Zapalovací cívky – srovnávací tabulky

BOUGICORD	TESLA
155051	CL312
155052	CL200
155053	CL220
155054	CL016
155055	CL115
155056	CL304
155057	CL207
155058	CL313
155059	CL109
155060	CL122
155061	CL118
155062	CL205
155063	CL129
155064	CL206
155066	CL501
155067	CL700
155068	CL519
155069	CL019
155070	CL607
155071	CL513
155072	CL605
155073	CL119
155074	CL309
155075	CL403
155076	CL302
155077	CL611
155078	CL212
155079	CL204
155080	CL211
155081	CL316
155082	CL108
155083	CL114
155084	CL018
155085	CL609
155086	CL500
155087	CL510
155088	CL121
155089	CL219
155091	CL502
155092	CL511
155093	CL524
155094	CL503
155095	CL320
155096	CL509
155097	CL021
155098	CL615
155099	CL515
155100	CL601
155103	CL017
155104	CL009
155105	CL008
155106	CL023
155107	CL224
155109	CL024
155110	CL034
155111	CL029
155112	CL030
155113	CL546
155114	CL507
155115	CL216
155118	CL551
155119	CL541
155120	CL523
155121	CL530
155125	CL534
155127	CL028
155129	CL146

BOUGICORD	TESLA
155133	CL719
155134	CL321
155135	CL542
155136	CL603
155138	CL554
155139	CL616
155140	CL555
155141	CL579
155142	CL564
155143	CL152
155144	CL624
155146	CL323
155147	CL412
155148	CL151
155149	CL569
155151	CL505
155152	CL547
155153	CL711
155154	CL506
155155	CL402
155156	CL526
155157	CL527
155158	CL529
155159	CL535
155160	CL536
155161	CL539
155164	CL544
155166	CL225
155167	CL548
155168	CL549
155170	CL557
155171	CL558
155172	CL708
155174	CL566
155175	CL577
155176	CL556
155177	CL565
155179	CL580
155180	CL410
155181	CL706
155182	CL595
155184	CL561
155200	CL600
155206	CL927
155273	CL723
155275	CL235
155279	CL627
155381	CL929
155458	CL926
155500	CL004
155900	CL006
156100	CL002
156200	CL100
156300	CL202
156500	CL113
156600	CL105
156800	CL127
157000	CL314
157100	CL315
157200	CL007
157300	CL301
157400	CL003
157500	CL005
157600	CL014
157700	CL015
157800	CL022
157900	CL011

BREMI	TESLA
11719	CL131
11720	CL116
11722	CL128
11723	CL102
11731	CL002
11732	CL615
11869	CL004
11873	CL605
11875	CL400
11876	CL206
11877	CL118
11878	CL108
11879	CL114
11880	CL109
11881	CL106
11882	CL107
11883	CL302
11884	CL129
11885	CL506
11886	CL500
11887	CL508
11888	CL509
11889	CL559
11890	CL543
11892	CL019
11893	CL001
11896	CL205
11898	CL304
11899	CL300
11900	CL313
11906	CL018
11914	CL588
11915	CL501
11917	CL122
11921	CL563
11922	CL207
11925	CL563
11927	CL504
11929	CL312
11930	CL136
11931	CL137
11935	CL700
20110	CL602
20111	CL100
20112	CL022
20113	CL005
20114	CL015
20115	CL017
20116	CL009
20117	CL003
20120	CL011
20121	CL023
20122	CL016
20124	CL024
20129	CL010
20130	CL014
20131	CL510
20132	CL021
20133	CL030
20135	CL515
20136	CL202
20137	CL525
20138	CL201
20139	CL408
20140	CL569
20142	CL123
20143	CL523

BREMI	TESLA
20145	CL616
20148	CL574
20149	CL535
20150	CL512
20151	CL557
20152	CL580
20153	CL611
20155	CL401
20156	CL110
20157	CL607
20158	CL560
20159	CL026
20160	CL200
20161	CL111
20163	CL513
20164	CL524
20166	CL220
20167	CL130
20168	CL119
20169	CL219
20170	CL502
20172	CL711
20173	CL519
20174	CL305
20175	CL307
20176	CL403
20179	CL222
20180	CL618
20181	CL210
20182	CL127
20183	CL104
20184	CL214
20185	CL622
20186	CL121
20187	CL315
20188	CL609
20189	CL215
20190	CL404
20191	CL520
20192	CL536
20193	CL203
20194	CL708
20195	CL610
20197	CL318
20198	CL561
20199	CL613
20200	CL124
20300	CL204
20301	CL578
20303	CL406
20304	CL503
20305	CL570
20306	CL135
20307	CL606
20308	CL907
20310	CL209
20312	CL320
20313	CL405
20314	CL542
20315	CL505
20316	CL132
20317	CL553
20319	CL612
20320	CL112
20321	CL217
20322	CL511
20323	CL555

BREMI	TESLA
20324	CL537
20325	CL538
20326	CL528
20327	CL521
20327	CL617
20328	CL521
20330	CL547
20332	CL568
20333	CL583
20334	CL138
20335	CL213
20336	CL317
20337	CL592
20338	CL306
20339	CL546
20340	CL115
20344	CL565
20345	CL117
20346	CL576
20347	CL125
20348	CL126
20350	CL225
20352	CL140
20353	CL906
20354	CL562
20356	CL712
20358	CL713
20361	CL589
20362	CL919
20364	CL707
20365	CL230
20367	CL211
20368	CL229
20369	CL548
20370	CL585
20371	CL008
20372	CL706
20373	CL113
20374	CL719
20375	CL625
20377	CL151
20378	CL566
20379	CL594
20380	CL301
20381	CL802
20382	CL316
20383	CL141
20384	CL709
20386	CL577
20387	CL801
20388	CL595
20389	CL901
20391	CL722
20394	CL913
20395	CL527
20397	CL411
20398	CL920
20399	CL917
20400	CL556
20402	CL921
20403	CL586
20405	CL720
20406	CL572
20415	CL922
20417	CL718
20427	CL239
20428	CL931

BREMI > TESLA ▶

Ignition coils – cross references
Катушки зажигания – таблицы сравнения
Zapalovací cívky – srovnávací tabulky

BREMI	TESLA
20432	CL593
20435	CL915
20439	CL564
20441	CL534
20443	CL581
20444	CL928
20445	CL598
20464	CL930
20471	CL235
20475	CL932
20482	CL927
20488	CL237
20520	CL245
20524	CL236
20547	CL244
11 856T	CL601
11 860T	CL600
11866T	CL006
CADILLAC	**TESLA**
12610626	CL245
DACIA	**TESLA**
22 43 324 28R	CL155
60 00 592 931	CL117
60 01 543 604	CL116
60 01 544 755	CL117
DAEWOO	**TESLA**
0001587003	CL604
0001587503	CL604
1115467	CL211
01115467	CL211
93363483	CL220
94582699	CL231
96165049	CL211
96253555	CL220
96291054	CL216
96320818	CL204
96336522	CL204
96350585	CL201
96453420	CL225
96566260	CL220
DAIHATSU	**TESLA**
19070-B1020	CL587
19500-87201	CL563
19500-87201-000	CL563
19500-87202	CL563
90048-52070	CL563
90048-52072	CL563
90048-52072-000	CL563
90048-52077	CL563
90048-52078	CL563
90048-52079	CL563
90048-52083-000	CL907
90048-52084	CL563
90048-52085	CL563
90048-52086	CL563
90048-52088-000	CL907
90048-52091	CL563
90048-52093	CL563
90048-52093-000	CL563
90048-52094-000	CL907
90048-52095	CL563
90048-52095-000	CL563
90048-52098	CL563
90048-52099	CL563
90048-52126	CL922
DELPHI	
CE10000-12B1	CL202

DELPHI	TESLA
CE10001-12B1	CL212
CE10020-12B1	CL124
CE10021-12B1	CL136
CE10023-12B1	CL001
CE10027-12B1	CL702
CE10510-12B1	CL206
CE10512-12B1	CL711
CE10513-12B1	CL539
CE20009-12B1	CL221
CE20010-12B1	CL110
CE20011-12B1	CL111
CE20014-12B1	CL100
CE20015-12B1	CL117
CE20017-12B1	CL130
CE20018-12B1	CL134
CE20019-12B1	CL004
CE20020-12B1	CL115
CE20024-12B1	CL113
CE20026-12B1	CL127
CE20029-12B1	CL007
CE20029-12B1	CL008
CE20030-12B1	CL003
CE20034-12B1	CL011
CE20035-12B1	CL317
CE20036-12B1	CL306
CE20038-12B1	CL604
CE20039-12B1	CL318
CE20040-12B1	CL307
CE20043-12B1	CL405
CE20044-12B1	CL401
CE20046-12B1	CL128
CE20047-12B1	CL102
CE20048-12B1	CL116
CE20053-12B1	CL122
CE20054-12B1	CL105
CE20055-12B1	CL123
CE20056-12B1	CL310
CE20057-12B1	CL311
CE20058-12B1	CL300
CE20060-12B1	CL109
CE20061-12B1	CL312
CE20062-12B1	CL301
DS10000-12B1	CL200
DS20013-12B1	CL201
DS20026-11B1	CL224
GE10216-12B1	CL513
GN10018-11B1	CL002
GN10024-11B1	CL509
GN10028-11B1	CL559
GN10068-11B1	CL501
GN10142-12B1	CL706
GN10171-12B1	CL569
GN10172-12B1	CL712
GN10174-12B1	CL713
GN10175-12B1	CL578
GN10184-11B1	CL580
GN10191-12B1	CL547
GN10195-12B1	CL009
GN10205-12B1	CL403
GN10206-12B1	CL034
GN10210-12B1	CL602
GN10211-12B1	CL302
GN10219-11B1	CL592
GN10219-12B1	CL592
GN10224-11B1	CL535
GN10225-11B1	CL536
GN10228-11B1	CL548

DELPHI	TESLA
GN10231-12B1	CL628
GN10232-12B1	CL627
GN10234-1281	CL233
GN10235-12B1	CL621
GN10239-12B1	CL151
GN10240-12B1	CL135
GN10241-11B1	CL911
GN10248-11B1	CL586
GN10435-12B1	CL933
GN10440-12B1	CL930
GN10477-12B1	CL242
GN10484-12B1	CL934
GN10485-12B1	CL237
GN10494-12B1	CL245
GN10530-12B1	CL236
GN10583-12B1	CL157
GN10584-12B1	CL158
ERA	**TESLA**
880001	CL001
880003	CL002
880005	CL010
880006	CL003
880007	CL005
880008	CL300
880009	CL100
880010	CL314
880011	CL315
880012	CL304
880013	CL106
880014	CL107
880015	CL207
880016	CL113
880017	CL127
880018	CL103
880019	CL101
880020	CL128
880021	CL102
880023	CL108
880024	CL114
880026	CL109
880027	CL122
880028	CL118
880029	CL205
880030	CL018
880031	CL129
880032	CL206
880033	CL007
880034	CL110
880035	CL111
880036	CL130
880037	CL014
880038	CL301
880039	CL202
880040	CL200
880042	CL316
880043	CL312
880044	CL201
880045	CL600
880046	CL601
880048	CL400
880049	CL401
880050	CL609
880051	CL123
880052	CL500
880053	CL501
880054	CL506
880055	CL508

ERA	TESLA
880056	CL131
880057	CL700
880058	CL116
880059	CL519
880060	CL124
880061	CL019
880062	CL607
880063	CL203
880064	CL011
880065	CL015
880066	CL022
880067	CL702
880068	CL310
880070	CL204
880071	CL520
880072	CL513
880073	CL112
880074	CL006
880075	CL212
880076	CL510
880077	CL402
880078	CL213
880079	CL307
880080	CL214
880081	CL004
880082	CL710
880084	CL132
880085	CL104
880086	CL115
880087	CL133
880088	CL134
880089	CL105
880090	CL308
880091	CL309
880092	CL117
880093	CL311
880094	CL008
880095	CL135
880096	CL610
880097	CL605
880098	CL521
880099	CL522
880100	CL119
880101	CL215
880102	CL317
880103	CL403
880107	CL602
880108	CL318
880109	CL302
880110	CL611
880112	CL507
880113	CL211
880114	CL216
880115	CL136
880116	CL137
880117	CL120
880118	CL138
880119	CL139
880120	CL140
880121	CL141
880123	CL404
880124	CL511
880125	CL217
880126	CL405
880127	CL406
880128	CL306
880129	CL305

ERA	TESLA
880130	CL218
880131	CL319
880132	CL320
880133	CL121
880134	CL321
880135	CL020
880136	CL208
880137	CL219
880138	CL523
880139	CL502
880140	CL524
880141	CL503
880142	CL525
880143	CL526
880144	CL527
880145	CL515
880146	CL528
880147	CL529
880148	CL530
880149	CL531
880150	CL532
880151	CL220
880152	CL533
880153	CL221
880155	CL534
880156	CL209
880157	CL222
880158	CL535
880159	CL536
880160	CL537
880161	CL538
880162	CL539
880163	CL540
880164	CL541
880165	CL612
880166	CL009
880169	CL407
880171	CL210
880172	CL229
880173	CL230
880174	CL223
880175	CL542
880176	CL224
880179	CL613
880180	CL606
880181	CL625
880182	CL408
880183	CL543
880184	CL544
880185	CL504
880186	CL505
880187	CL545
880188	CL546
880189	CL225
880190	CL547
880191	CL711
880192	CL614
880193	CL409
880194	CL512
880195	CL021
880196	CL548
880197	CL549
880198	CL226
880200	CL603
880201	CL550
880202	CL514
880203	CL551

Ignition coils – cross references
Катушки зажигания – таблицы сравнения
Zapalovací cívky – srovnávací tabulky

ERA	TESLA
880205	CL553
880206	CL125
880207	CL509
880208	CL615
880211	CL150
880213	CL554
880214	CL589
880216	CL590
880219	CL234
880220	CL705
880222	CL557
880223	CL573
880224	CL558
880225	CL559
880226	CL708
880230	CL560
880233	CL716
880240	CL616
880241	CL571
880242	CL924
880243	CL555
880244	CL576
880245	CL579
880246	CL566
880247	CL561
880248	CL907
880250	CL562
880253	CL563
880255	CL564
880256	CL575
880257	CL577
880258	CL556
880259	CL584
880260	CL231
880264	CL585
880266	CL583
880267	CL034
880268	CL029
880269	CL017
880270	CL023
880271	CL569
880272	CL586
880273	CL565
880274	CL152
880275	CL624
880276	CL239
880277	CL587
880278	CL323
880281	CL580
880283	CL919
880284	CL617
880287	CL026
880291	CL412
880293	CL410
880295	CL411
880297	CL706
880298	CL595
880299	CL016
880300	CL324
880301	CL913
880302	CL592
880303	CL925
880307	CL578
880311	CL582
880312	CL915
880314	CL593
880316	CL803

ERA	TESLA
880317	CL931
880318	CL911
880319	CL901
880320	CL902
880325	CL721
880326	CL903
880327	CL904
880328	CL926
880329	CL908
880331	CL909
880332	CL151
880333	CL920
880334	CL581
880337	CL241
880339	CL031
880341	CL033
880342	CL916
880344	CL707
880345	CL032
880346	CL628
880347	CL233
880348	CL621
880349	CL923
880352	CL914
880353	CL919
880354	CL238
880358	CL719
880359	CL568
880362	CL932
880370	CL235
880374	CL326
880375	CL325
880376	CL244
880377	CL155
880386	CL627
880392	CL236
880401	CL240
880403	CL237
880418	CL413
880420	CL242
880421	CL415
880422	CL414
880427	CL156
880434	CL416
880435	CL157
880438	CL626
880441	CL243

FACET	TESLA
9.6004	CL316
9.6005	CL108
9.6006	CL114
9.6007	CL118
9.6008	CL304
9.6035	CL400
9.6040	CL206
9.6046	CL300
9.6048	CL313
9.6054	CL228
9.6055	CL109
9.6056	CL129
9.6058	CL308
9.6068	CL302
9.6070	CL408
9.6078	CL609
9.6088	CL107
9.6089	CL106
9.6096	CL123

FACET	TESLA
9.6098	CL568
9.6099	CL513
9.6101	CL588
9.6102	CL574
9.6103	CL578
9.6111	CL716
9.6113	CL500
9.6114	CL501
9.6115	CL560
9.6119	CL204
9.6120	CL558
9.6121	CL509
9.6128	CL122
9.6129	CL559
9.6133	CL506
9.6152	CL563
9.6166	CL570
9.6172	CL207
9.6173	CL219
9.6175	CL124
9.6176	CL125
9.6177	CL126
9.6183	CL525
9.6184	CL508
9.6207	CL615
9.6213	CL320
9.6214	CL317
9.6216	CL606
9.6241	CL205
9.6244	CL504
9.6245	CL312
9.6247	CL569
9.6252	CL600
9.6255	CL136
9.6256	CL137
9.6265	CL131
9.6274	CL700
9.6276	CL128
9.6277	CL116
9.6278	CL102
9.6282	CL318
9.6284	CL315
9.6286	CL306
9.6287	CL305
9.6293	CL020
9.6294	CL519
9.6297	CL307
9.6298	CL217
9.6299	CL202
9.6303	CL110
9.6305	CL111
9.6314	CL607
9.6317	CL605
9.6319	CL130
9.6323	CL309
9.6325	CL017
9.6326	CL011
9.6327	CL015
9.6329	CL005
9.6331	CL009
9.6332	CL100
9.6333	CL029
9.6334	CL016
9.6335	CL023
9.6337	CL024
9.6342	CL310
9.6350	CL221

FACET	TESLA
9.6357	CL550
9.6358	CL564
9.6359	CL520
9.6361	CL555
9.6374	CL003
9.6375	CL602
9.6380	CL405
9.6381	CL403
9.6383	CL151
9.6387	CL621
9.6389	CL554
9.6405	CL929
9.6407	CL218
9.6418	CL150
9.6491	CL533
9.8034	CL200
9.8114	CL001
9.8120	CL002
9.8123	CL119
9.6062S	CL601
9.6254S	CL004
9.6269S	CL907

FEBI BILSTEIN	TESLA
17194	CL001
19929	CL300
21109	CL601
21524	CL116
21525	CL131
21526	CL102
21527	CL128
21528	CL118
21529	CL123
21666	CL100
22038	CL003
22389	CL202
22581	CL106
22697	CL312
22875	CL124
23187	CL203
23258	CL011
23260	CL015
24106	CL005
24108	CL014
24435	CL135
24500	CL009
24997	CL111
26014	CL200
26869	CL401
27132	CL002
27168	CL213
27522	CL217
28108	CL221
28148	CL212
28465	CL019
28533	CL614
28535	CL611
28536	CL605
28538	CL606
28548	CL610
28549	CL607
28645	CL513
28657	CL519
28658	CL520
29147	CL600
29319	CL010
29412	CL004
30261	CL515

FEBI BILSTEIN	TESLA
30266	CL204
30268	CL501
30713	CL525
30971	CL400
31143	CL405
31390	CL570
32054	CL581
32055	CL579
33189	CL583
33647	CL234
37421	CL238
37423	CL233

FIAT	TESLA
4439396	CL316
7553120	CL308
7582152	CL304
7626232	CL300
7646974	CL308
7646975	CL303
7648797	CL302
7663177	CL304
7672018	CL300
7694335	CL303
7698431	CL304
7746151	CL313
7746152	CL304
7746153	CL308
7746154	CL304
7753777	CL303
7789346	CL312
46403328	CL317
46446039	CL312
46460582	CL314
46467542	CL318
46469863	CL305
46472440	CL312
46473849	CL315
46480361	CL312
46543562	CL300
46548037	CL300
46755605	CL307
46776830	CL311
46777286	CL301
46777287	CL311
46777288	CL310
46790073	CL300
46794782	CL321
55180004	CL301
55200112	CL309
55200486	CL309
55208723	CL309
55209603	CL323
55212624	CL324
55213613	CL323
55229959	CL326
55231256	CL325
55234131	CL325
55246099	CL310
60558152	CL302
60562701	CL320
60586072	CL319
60809606	CL302
60810690	CL320
71739285	CL224
71739725	CL221
71742420	CL561
71750222	CL236

FIAT > TESLA ▶

Ignition coils – cross references
Катушки зажигания – таблицы сравнения
Zapalovací cívky – srovnávací tabulky

FIAT	TESLA
71768140	CL236
71768298	CL236
76262320	CL300
76487970	CL302
96228897	CL107
9604137880	CL129
9607405480	CL107
9622889780	CL107
9633001580	CL135
FORD	**TESLA**
1008464	CL021
1008886	CL400
1008887	CL400
1018139	CL400
1018140	CL400
1067601	CL401
1075786	CL401
1119835	CL409
1130402	CL401
1223293	CL407
1224925	CL405
1314271	CL405
1317972	CL401
1319788	CL409
1322402	CL405
1331283	CL023
1350562	CL403
1350567	CL406
1360553	CL407
1362718	CL023
1371601	CL410
1404981	CL412
1458400	CL406
1459278	CL403
1535713	CL309
1578771	CL405
1649067	CL400
1671690	CL309
1682188	CL413
1716750	CL412
1762724	CL414
1827901	CL416
1832313	CL414
4751265	CL411
5008190	CL411
5121001	CL415
5153009	CL415
5168444	CL415
6181956	CL400
6485687	CL404
6485688	CL404
6489415	CL408
6503277	CL400
6503278	CL400
6503279	CL400
6503280	CL400
6630365	CL408
6860288	CL400
6860289	CL400
6958305	CL408
7053859	CL402
12029CA	CL400
1S7G 12029 AB	CL409
1S7G 12029 AC	CL409
1S7G12029AC	CL401
2S7G 12029 AB	CL407
2S7G 12029 AC	CL407

FORD	TESLA
2S7G 12029 AD	CL407
4M5G 12029 ZA	CL403
4M5G 12029 ZB	CL403
4M5G 12A366 BA	CL405
4M5G 12A366 BB	CL405
4M5G 12A366 BC	CL405
4M5G 12A366 BD	CL405
4S7G 12029 AA	CL406
4S7G 12029 AB	CL406
5F2E12029 AA	CL411
5F2E12029 AB	CL411
6E5G12A366 AD	CL412
6E5G12A366 AE	CL412
6M5G12029 AA	CL410
88SF 12029 A1A	CL400
88SF 12029 A2A	CL400
88SF 12029 AA	CL400
89BF 12024 A1B	CL400
8SF12029A1A	CL400
919F 12029 AA	CL408
91XF 12029 AA	CL404
91XF 12029 BA	CL404
928F 12029 CA	CL400
938F 12024 DA	CL400
95VW 12029 AA	CL021
95WF 12029 BA	CL402
96FB12257AB	CL400
988F 12024 AB	CL401
988F 12029 AC	CL401
988F 12029 AD	CL401
988F12029AB	CL401
988F12029AD	CL409
988F1209AB	CL401
988F1209AC	CL401
98BF12024AB	CL401
9S51-12029-AA	CL309
9S51-12029-AB	CL309
AG9G-12A366-BB	CL413
BM5G-12A366-CA	CL414
BM5G-12A366-DA	CL414
BM5G-12A366-DB	CL414
CM5E-12A366-BB	CL415
CM5E-12A366-BC	CL415
CM5E-12A366-CA	CL415
CM5G-12A366-CB	CL416
E8GY-12029-B	CL559
E8TF12029AA	CL400
E8TZ-12029-A	CL400
E92Z-12029-B	CL559
E9SF 12029 AA	CL408
E9SZ 12029 A	CL408
E9TF-12029-AA	CL400
F1SU 12029 AA	CL408
F1VU12029A1A	CL400
F1VU12029A2A	CL400
F1VY12029A	CL400
F37Z 12029 A	CL400
F5LU12029AA	CL400
F5LY 12029 A	CL400
F5OU12029AA	CL400
F5OY12029A	CL400
F5OY12029B	CL400
F5RZ12029C	CL400
F5SU 12029 AA	CL408
F5SZ12029A	CL408
YM21 12029 AC	CL023
YM2F12029AB	CL401

FORD	TESLA
YM2F12029AB	CL409
GM	**TESLA**
01104038	CL201
1104082	CL221
1208015	CL232
1208092	CL238
3474200	CL228
9268344	CL228
10450424	CL201
10458316	CL221
10490192	CL201
12529546	CL237
12566569	CL239
12578224	CL237
12583514	CL239
12613057	CL239
12618542	CL245
12629037	CL239
12632479	CL245
12635672	CL243
12638824	CL237
12787707	CL235
19005277	CL234
19017110	CL712
25181813	CL234
25186687	CL244
55350843	CL232
55561655	CL233
55569253	CL240
55573734	CL242
55573735	CL238
55577946	CL242
55579071	CL242
55584404	CL244
90173708	CL232
90536194	CL203
93173708	CL232
93194165	CL236
94404545	CL513
94853695	CL513
96414260	CL234
96476979	CL241
HITACHI (HÜCO)	**TESLA**
133800	CL100
133801	CL310
133802	CL702
133803	CL135
133804	CL600
133805	CL004
133806	CL005
133807	CL003
133808	CL011
133809	CL202
133810	CL203
133811	CL601
133813	CL604
133814	CL606
133815	CL213
133816	CL214
133817	CL110
133818	CL111
133819	CL104
133820	CL127
133821	CL115
133822	CL610
133825	CL602
133826	CL800

HITACHI (HÜCO)	TESLA
133827	CL301
133828	CL014
133829	CL318
133830	CL022
133831	CL015
133832	CL221
133833	CL616
133834	CL034
133837	CL711
133838	CL708
133839	CL215
133840	CL306
133841	CL307
133842	CL138
133843	CL133
133844	CL520
133845	CL029
133846	CL555
133847	CL016
133848	CL023
133849	CL314
133850	CL707
133851	CL719
133852	CL405
133853	CL141
133854	CL151
133855	CL229
133856	CL230
133857	CL024
133858	CL510
133859	CL132
133860	CL511
133861	CL305
133862	CL140
133863	CL554
133865	CL317
133866	CL217
133867	CL153
133868	CL512
133870	CL121
133892	CL723
133901	CL911
133907	CL592
133908	CL916
133909	CL534
133910	CL585
133911	CL510
133914	CL535
133915	CL536
133919	CL537
133920	CL537
133921	CL538
133923	CL913
133924	CL914
133925	CL915
133926	CL315
134015	CL244
134021	CL245
134025	CL242
134040	CL628
134042	CL627
134050	CL931
134051	CL157
134053	CL933
134054	CL934
134055	CL930
138419	CL001

HITACHI (HÜCO)	TESLA
138425	CL002
138426	CL019
138430	CL200
138434	CL021
138435	CL028
138437	CL030
138441	CL026
138706	CL928
138709	CL605
138710	CL607
138711	CL611
138712	CL130
138713	CL150
138714	CL502
138715	CL613
138717	CL802
138718	CL524
138728	CL125
138729	CL126
138730	CL300
138732	CL313
138735	CL122
138736	CL124
138738	CL123
138739	CL312
138743	CL932
138750	CL118
138752	CL109
138753	CL129
138754	CL108
138756	CL106
138757	CL136
138758	CL137
138759	CL128
138760	CL107
138761	CL209
138762	CL207
138764	CL116
138765	CL131
138766	CL102
138768	CL222
138780	CL206
138781	CL205
138790	CL219
138793	CL302
138800	CL400
138802	CL408
138803	CL401
138804	CL212
138805	CL201
138806	CL801
138808	CL403
138809	CL406
138810	CL569
138811	CL409
138812	CL501
138813	CL560
138814	CL500
138825	CL559
138843	CL543
138865	CL513
138866	CL568
138868	CL578
HONDA	**TESLA**
30500-P0AA01	CL569
30500-P0HA01	CL569
30500-PAAA01	CL569

Ignition coils – cross references
Катушки зажигания – таблицы сравнения
Zapalovací cívky – srovnávací tabulky

HONDA	TESLA
30500-PCA-003	CL569
30500-PCAA01	CL569
30500-PDAA01	CL569
30500-PDA-E01	CL569
30500-PM5-A02	CL500
30500-PM5-A03	CL500
30500-PR4-A02	CL560
30500PTZ005	CL501
30510-P73-A01	CL501
30510-P73-A02	CL501
30510-PT2-006	CL501
30520-P8E-A01	CL550
30520-P8F-A01	CL550
30520-P8F-A02	CL550
30520-PDF-E11	CL522
30520-PGK-A01	CL583
30520-PH7-006	CL716
30520-PH7-016	CL716
30520-PNA-007	CL556
30520-PVF-A01	CL583
30520-PWA-003	CL585
30520-RAA-007	CL556
30520-RCA-A02	CL550
30520-RNA-A01	CL596
30520-RRA-007	CL556
30521-PWA-003	CL586
HYUNDAI	**TESLA**
27300-2E000	CL909
27300-39700	CL553
27300-3F100	CL902
27301-02100	CL551
27301-02502	CL519
27301-02600	CL523
27301-03110	CL904
27301-04000	CL903
27301-22040	CL502
27301-22050	CL502
27301-22600	CL524
27301-23003	CL503
27301-23500	CL539
27301-23510	CL539
27301-23700	CL565
27301-23900	CL901
27301-24510	CL508
27301-24520	CL508
27301-26640	CL595
27301-2B000	CL566
27301-2B010	CL584
27301-2B100	CL926
27301-32800	CL525
27301-32810	CL525
27301-32820	CL525
27301-33010	CL526
27301-33020	CL526
27301-37100	CL528
27301-37110	CL527
27301-37120	CL527
27301-37150	CL932
27301-38020	CL515
273013C000	CL593
27301-3E100	CL590
27301-3E400	CL908
HQ808700	CL540
CHERY	**TESLA**
A113705110EA	CL803
CHEVROLET	**TESLA**
12610626	CL245

CHEVROLET	TESLA
25186686	CL241
55570160	CL241
55575499	CL238
96253555	CL220
96291054	CL216
96414260	CL234
96453420	CL225
96476979	CL241
96476983	CL233
CHRYSLER	**TESLA**
4606869AA	CL721
4606869AB	CL721
4609088AC	CL720
04609088AC	CL720
4609088AD	CL720
04609088AD	CL720
4609088AF	CL720
04609088AF	CL720
4609088AG	CL720
4609095AB	CL722
4609095AC	CL722
4609095AD	CL722
4609095AE	CL722
4609095AF	CL722
4609095AG	CL722
4609103AB	CL706
04609103AB	CL706
4797293	CL712
5234210	CL712
5234610	CL712
5252577	CL712
5269670	CL706
05269670	CL706
05269670AB	CL706
53008068	CL712
56027965	CL712
56028138	CL709
56028138AB	CL709
56028138AD	CL709
56028138AE	CL709
56028138AF	CL709
56028172	CL713
56028172AB	CL713
56028172AC	CL713
56029129AA	CL718
56029129AB	CL718
56029129AF	CL718
56032521	CL706
56032521AB	CL706
JAGUAR	**TESLA**
JDE30294	CL415
KIA	**TESLA**
0K011 18 100	CL544
0K013 18 100	CL548
0K201 18 10XB	CL504
0K201 18 10XC	CL504
0K247 18 100A	CL505
0K2A3 18 100A	CL589
0K30A 18 10X	CL529
0K30E 18 10X	CL530
0K30E 18 10XZ	CL530
0K9A2 18 10XB	CL545
0K9BV 18 10X	CL531
27300-2E000	CL909
27300-3F100	CL902
27301-26600	CL546
27301-02700	CL541

KIA	TESLA
27301-02710	CL541
27301-03110	CL904
27301-04000	CL903
27301-23700	CL565
27301-23900	CL901
27301-26640	CL595
27301-2B010	CL584
27301-2B100	CL926
27301-33510	CL532
27301-33520	CL532
27301-37150	CL932
27301-3C000	CL593
27301-3E400	CL908
KK137-18-10X	CL558
KK137-18-10XC	CL558
LADA (VAZ)	**TESLA**
21110-3705010	CL802
21110-3705010-03	CL802
2111-3705010	CL802
2111-3745010	CL802
2112-03705010-10	CL800
2112-3705010-02	CL801
2112-3705010-03	CL801
2112-3705010-07	CL801
2112-3705010-10	CL800
LANCIA	**TESLA**
46467542	CL318
60558152	CL302
60809606	CL302
76487970	CL302
9633001580	CL135
LANDROVER	**TESLA**
ERR 6045	CL302
ERR6566	CL302
LR002954	CL723
LR030637	CL415
NEC 000040	CL600
NEC 000070	CL702
NEC 000070 L	CL702
NEC 000110 L	CL702
NEC 000120 L	CL711
NEC 101000 L	CL600
LEXUS	**TESLA**
90919-02246	CL921
90919-02255	CL920
MAZDA	**TESLA**
1E05-18-100	CL400
1E05-18-100A	CL400
B121-18-10X	CL507
B541-18-10XA	CL507
B542-18-10XA	CL507
B61P-18-10XC	CL573
B61P-18-10XD	CL573
B6S7-18-10XA	CL506
B6S8-18-10XA	CL506
C401-18-100A	CL403
F210-18-100	CL559
F210-18-100B	CL559
F211-18-100A	CL559
FFY1-18-100	CL572
FP85-18-100C	CL572
FSD7-18-100	CL400
JF01-18-100B	CL559
L3G2-18-100A	CL599
L3G2-18-100A9U	CL599
L3G2-18-100B	CL599
L3G2-18-100B9U	CL599

MAZDA	TESLA
L813-18-100	CL906
ZJ01-18-100A	CL910
ZJ20-18-100	CL905
ZJ20-18-100A	CL905
ZL01-18-100	CL594
ZL01-18-100A	CL594
ZL01-18-100B	CL594
ZZM0-18-100	CL400
MERCEDES	
000 150 02 80	CL604
000 150 04 80	CL611
000 150 13 80	CL610
000 150 19 80	CL621
000 150 25 80	CL622
000 150 26 80	CL621
000 150 27 80	CL621
000 150 28 80	CL616
000 158 45 03	CL609
000 158 48 03	CL609
000 158 50 03	CL609
000 158 50 03	CL614
000 158 53 03	CL609
000 158 61 03	CL609
000 158 62 03	CL609
000 158 62 03	CL614
000 158 64 03	CL612
000 158 65 03	CL613
000 158 68 03	CL611
000 158 70 03	CL604
000 158 71 03	CL604
000 158 71 03	CL606
000 158 73 03	CL605
000 158 75 03	CL604
000 158 75 03	CL606
000 158 77 03	CL607
000 158 78 03	CL605
000 158 79 03	CL628
000 906 00 60	CL628
000150 15 80	CL618
000150 17 80	CL616
000158 72 03	CL617
003 158 50 01	CL021
156 150 00 80	CL627
156 150 03 80	CL627
156 906 04 00	CL627
156 906 05 00	CL627
156 906 06 00	CL627
272 150 02 80	CL629
272 906 01 60	CL628
276 150 00 80	CL629
276 906 01 60	CL629
276 906 02 60	CL629
A000 150 02 80	CL604
A000 150 04 80	CL611
A000 150 15 80	CL618
A000 150 17 80	CL616
A000 150 19 80	CL621
A000 150 25 80	CL622
A000 150 26 80	CL621
A000 150 27 80	CL621
A000 150 28 80	CL616
A000 158 62 03	CL614
A000 158 65 03	CL613
A000 158 68 03	CL611
A000 158 70 03	CL604
A000 158 71 03	CL606
A000 158 73 03	CL605

MERCEDES	TESLA
A000 158 75 03	CL606
A000 158 78 03	CL605
A000 158 79 03	CL628
A000 906 00 60	CL628
A003 158 50 01	CL021
A156 150 00 80	CL627
A156 150 03 80	CL627
A156 906 04 00	CL627
A156 906 05 00	CL627
A156 906 06 00	CL627
A272 150 02 80	CL629
A272 906 00 60	CL621
A272 906 01 60	CL628
A276 150 00 80	CL629
A276 906 01 60	CL629
A276 906 02 60	CL629
MITSUBISHI	**TESLA**
1832A016	CL927
1832A042	CL925
27301-24520	CL508
H006T11471	CL925
H6T11471	CL925
H6T15371ZC	CL240
H6T60271	CL235
HQ808700	CL540
MD 104696	CL525
MD 113551	CL543
MD 114994	CL508
MD 126461	CL526
MD 131711	CL543
MD 158956	CL562
MD 160532	CL558
MD 309455	CL907
MD 314582	CL928
MD 314583	CL598
MD 325048	CL547
MD 361710	CL931
MD 362907	CL547
MD 362913	CL549
MD 363552	CL582
MN 195616	CL597
MN 195805	CL929
MR 994643	CL930
NGK	**TESLA**
48000	CL001
48001	CL409
48002	CL100
48003	CL003
48004	CL221
48005	CL005
48006	CL202
48007	CL130
48008	CL004
48009	CL600
48010	CL002
48011	CL203
48012	CL200
48013	CL300
48014	CL104
48015	CL009
48016	CL111
48017	CL610
48018	CL606
48019	CL128
48020	CL102
48021	CL400
48022	CL213

NGK > TESLA ▶

Ignition coils – cross references
Катушки зажигания – таблицы сравнения
Zapalovací cívky – srovnávací tabulky

NGK	TESLA
48023	CL110
48024	CL605
48025	CL302
48025	CL319
48025	CL544
48026	CL116
48027	CL403
48028	CL124
48029	CL205
48030	CL107
48031	CL135
48032	CL112
48033	CL602
48034	CL301
48035	CL023
48036	CL601
48037	CL006
48038	CL010
48039	CL019
48041	CL015
48042	CL011
48043	CL214
48044	CL406
48045	CL127
48046	CL318
48047	CL022
48048	CL028
48049	CL026
48050	CL611
48051	CL115
48052	CL312
48053	CL219
48054	CL501
48055	CL711
48056	CL207
48057	CL206
48058	CL101
48058	CL137
48059	CL700
48060	CL123
48061	CL310
48062	CL108
48063	CL405
48064	CL304
48065	CL016
48066	CL109
48067	CL106
48068	CL103
48068	CL136
48069	CL228
48070	CL201
48071	CL138
48072	CL133
48073	CL132
48074	CL120
48075	CL140
48076	CL141
48077	CL139
48078	CL131
48079	CL408
48080	CL212
48081	CL801
48082	CL014
48083	CL215
48084	CL800
48085	CL607
48086	CL411

NGK	TESLA
48087	CL021
48088	CL029
48089	CL616
48091	CL702
48092	CL118
48093	CL513
48094	CL568
48095	CL520
48096	CL209
48098	CL500
48099	CL560
48100	CL708
48101	CL030
48102	CL314
48103	CL306
48104	CL307
48105	CL578
48106	CL222
48107	CL555
48108	CL150
48111	CL569
48112	CL559
48113	CL508
48114	CL007
48115	CL609
48116	CL542
48117	CL509
48118	CL402
48119	CL404
48121	CL313
48122	CL510
48123	CL122
48124	CL151
48126	CL217
48127	CL121
48128	CL710
48129	CL204
48131	CL618
48132	CL114
48133	CL615
48134	CL515
48135	CL218
48136	CL315
48138	CL125
48139	CL511
48140	CL410
48141	CL211
48142	CL220
48146	CL224
48147	CL619
48148	CL507
48149	CL305
48150	CL020
48151	CL226
48152	CL525
48153	CL216
48154	CL320
48155	CL521
48156	CL119
48157	CL561
48158	CL506
48159	CL223
48160	CL503
48161	CL321
48162	CL554
48163	CL105
48165	CL024

NGK	TESLA
48166	CL539
48168	CL317
48169	CL309
48170	CL523
48171	CL707
48172	CL311
48173	CL502
48174	CL239
48175	CL316
48176	CL519
48177	CL407
48178	CL229
48179	CL550
48180	CL588
48181	CL563
48183	CL533
48184	CL579
48185	CL706
48187	CL612
48189	CL526
48190	CL126
48192	CL230
48193	CL210
48194	CL709
48201	CL534
48202	CL570
48203	CL713
48204	CL712
48205	CL232
48206	CL603
48207	CL622
48208	CL572
48209	CL524
48210	CL549
48211	CL907
48216	CL623
48221	CL625
48225	CL547
48226	CL592
48227	CL917
48228	CL598
48229	CL599
48230	CL565
48234	CL008
48235	CL575
48237	CL719
48239	CL584
48240	CL577
48241	CL153
48242	CL594
48243	CL536
48244	CL535
48245	CL566
48247	CL595
48248	CL580
48249	CL527
48250	CL573
48251	CL531
48252	CL590
48253	CL504
48254	CL591
48256	CL234
48257	CL920
48258	CL587
48259	CL720
48262	CL722
48265	CL718

NGK	TESLA
48266	CL596
48269	CL924
48270	CL589
48271	CL522
48273	CL576
48274	CL593
48275	CL908
48278	CL564
48279	CL412
48281	CL557
48282	CL154
48284	CL152
48285	CL512
48286	CL323
48287	CL546
48288	CL530
48289	CL225
48290	CL541
48291	CL548
48292	CL585
48293	CL586
48294	CL505
48295	CL556
48296	CL529
48297	CL571
48309	CL012
48311	CL613
48312	CL802
48313	CL553
48314	CL553
48315	CL551
48316	CL532
48317	CL597
48322	CL721
48333	CL538
48334	CL617
48335	CL324
48336	CL800
48337	CL621
48338	CL624
48347	CL911
48351	CL916
48356	CL537
48357	CL543
48372	CL932
48398	CL930
48407	CL244
NISSAN	**TESLA**
22433-0B000	CL509
22433-51J10	CL509
22433-53J20	CL509
22433-55S10	CL509
22433-56E11	CL509
22433-56E12	CL509
22433-8J115	CL915
22448-00QAA	CL100
22448-00QAC	CL100
22448-00QAC	CL116
22448-00QAE	CL100
22448-00QAH	CL100
22448-1F700	CL521
22448-1KC0A	CL900
22448-1KT0A	CL912
22448-2Y000	CL537
22448-2Y001	CL537
22448-2Y005	CL538
22448-31U00	CL535

NISSAN	TESLA
22448-31U01	CL535
22448-31U05	CL536
22448-31U06	CL536
22448-31U11	CL535
22448-31U16	CL536
22448-4M500	CL510
22448-4M50A	CL510
22448-4W001	CL914
22448-4W011	CL913
22448-6N000	CL511
22448-6N002	CL511
22448-6N010	CL511
22448-6N011	CL100
22448-6N012	CL511
22448-6N015	CL511
22448-8H300	CL592
22448-8H310	CL592
22448-8H311	CL592
22448-8H314	CL592
22448-8H315	CL592
22448-8J110	CL915
22448-8J111	CL915
22448-8J115	CL915
22448-8J11C	CL915
22448-AR210	CL916
22448-AR215	CL916
22448-AX001	CL534
22448-ED000	CL911
22448-ED800	CL554
22448-ED800EP	CL554
22448-EN200	CL911
22448-JA00A	CL911
22448-JA00C	CL911
OPEL	**TESLA**
1103872	CL200
1103905	CL200
1208002	CL205
1208003	CL206
1208004	CL205
1208007	CL209
1208008	CL203
1208010	CL212
1208012	CL214
1208020	CL215
1208021	CL221
1208022	CL228
1208026	CL224
1208028	CL217
1208031	CL228
1208048	CL205
1208051	CL201
1208053	CL208
1208054	CL206
1208063	CL200
1208065	CL219
1208068	CL210
1208070	CL206
1208071	CL207
1208075	CL222
1208086	CL233
1208087	CL245
1208089	CL237
1208091	CL242
1208093	CL238
1208094	CL242
1208096	CL238
1208098	CL244

Ignition coils – cross references
Катушки зажигания – таблицы сравнения
Zapalovací cívky – srovnávací tabulky

OPEL	TESLA
1208109	CL240
1208117	CL243
1208209	CL229
1208210	CL230
1208213	CL223
1208306	CL213
1208307	CL202
1208551	CL224
1208553	CL224
4408389	CL100
4413223	CL100
4413233	CL100
4709290	CL236
4802236	CL237
4805094	CL237
6235037	CL218
6235124	CL226
9118114	CL229
9118115	CL230
9119567	CL203
9153250	CL226
9195819	CL223
9198834	CL218
10457075	CL200
10457870	CL212
10458316	CL221
12567686	CL224
12569342	CL224
12580537	CL224
12787707	CL235
19005212	CL202
24420584	CL215
24420622	CL217
55577898	CL238
55579072	CL238
90350021	CL208
90350987	CL208
90358386	CL210
90369434	CL208
90424480	CL218
90443900	CL219
90444184	CL210
90449572	CL219
90449739	CL206
90449740	CL205
90458250	CL207
90492255	CL209
90510386	CL206
90510387	CL205
90511450	CL209
90532618	CL213
90536194	CL203
90541062	CL222
90543059	CL213
90543253	CL214
90560110	CL214
90563160	CL222
90564334	CL223
90584336	CL229
90584337	CL230
91159996	CL100
93172030	CL226
93177212	CL215
93180806	CL217
PORSCHE	**TESLA**
90660210101	CL625
90660210200	CL625

PORSCHE	TESLA
90660210301	CL625
94860210400	CL620
94860210401	CL620
94860210403	CL620
94860210405	CL620
94860210407	CL620
94860210408	CL620
94860210409	CL620
95560210105	CL016
95890511000	CL032
95960250200	CL612
99660210101	CL625
99660210200	CL625
99660210400	CL625
99760210700	CL625
PSA	**TESLA**
5963.18	CL113
5963.19	CL111
5970.42	CL114
5970.43	CL108
5970.45	CL109
5970.47	CL129
5970.48	CL107
5970.49	CL106
5970.50	CL105
5970.51	CL113
5970.53	CL302
5970.55	CL132
5970.56	CL127
5970.57	CL140
5970.60	CL107
5970.64	CL603
5970.70	CL107
5970.72	CL110
5970.73	CL115
5970.74	CL110
5970.75	CL112
5970.77	CL135
5970.78	CL111
5970.79	CL111
5970.80	CL104
5970.81	CL141
5970.84	CL133
5970.85	CL151
5970.87	CL138
5970.88	CL555
5970.90	CL120
5970.92	CL139
5970.94	CL135
5970.95	CL154
5970.96	CL927
5970.97	CL120
5970.98	CL112
5970.A0	CL138
5970.A4	CL115
5970.A5	CL133
5970.A8	CL111
5970.A9	CL110
94632641	CL112
96010513	CL108
96035284	CL109
96041378	CL129
96062288	CL106
96074054	CL107
96211048	CL113
96213086	CL127
96213181	CL132

PSA	TESLA
96228897	CL107
96246755	CL110
96281585	CL110
96292106	CL115
96341314	CL112
96358648	CL111
96358649	CL111
96362683	CL135
96363378	CL104
97530780	CL108
97531206	CL114
1607576780	CL929
9467511580	CL120
9603528480	CL109
9611412080	CL105
9616597080	CL106
9621308680	CL127
9624675580	CL110
9628158580	CL110
9633001580	CL135
9634131480	CL112
9636337880	CL104
9636997880	CL104
9644190980	CL154
9651710680	CL151
9654347080	CL120
9664401880	CL135
9671214580	CL157
9675390980	CL158
9800251580	CL156
V7 562 744	CL603
V7 571 64380	CL603
RENAULT	**TESLA**
22448-1KC0A	CL900
224332428R	CL155
224337085R	CL152
2526180A	CL100
215952732	CL100
708633020-7	CL103
7401275174	CL119
7700100589	CL128
7700100643	CL102
7700107177	CL100
7700107269	CL123
7700113357	CL100
7700113357A	CL100
7700274008	CL116
7700749450	CL122
7700854306	CL124
7700854307	CL125
7700858320	CL126
7700863020	CL136
7700863021	CL137
7700865923	CL136
7700872265	CL124
7700872449	CL131
7700872692	CL125
7700872693	CL126
7700872834	CL131
7700873701	CL131
7700875000	CL100
7701021954	CL146
7701029799	CL146
7701031135	CL118
7701041607	CL103
7701041608	CL101
8200025256	CL130

RENAULT	TESLA
8200051128	CL130
8200051128	CL149
8200084401	CL130
8200141149	CL131
8200154186	CL100
8200154186A	CL100
8200208611	CL100
8200360911	CL134
8200360911	CL149
8200380267	CL100
8200405098	CL100
8200568671	CL100
8200699627	CL153
8200702693	CL134
8200702693	CL149
8200702693	CL150
8200713680	CL149
8200726341	CL152
8200734204	CL149
8200765882	CL100
8200959964	CL152
8201154128	CL155
9633001580	CL135
ROVER	**TESLA**
GCL 161	CL500
GCL 195	CL501
GCL 201	CL700
GCL 204	CL106
GCL 207	CL569
GCL 307	CL600
GCL145	CL716
GCL146	CL716
NEC000040	CL600
NEC000070	CL702
NEC000110	CL702
NEC000120	CL711
NEC000130	CL708
NEC100530	CL501
NEC100630	CL700
NEC100730	CL711
NEC100730L	CL711
NEC100750	CL569
NEC100870	CL708
NEC101000	CL600
NEC101000L	CL600
SAAB	**TESLA**
4226031	CL208
4770046	CL210
5171111	CL208
9178955	CL710
9197559	CL705
12632479	CL245
12787707	CL235
55559955	CL705
55561132	CL710
55562588	CL705
SEAT	**TESLA**
032 905 106 B	CL002
867 905 104	CL001
SKODA	**TESLA**
004 050 016	CL001
032 905 106 B	CL002
047 905 104	CL008
047 905 104 A	CL007
047 905 104 B	CL007
047 905 115	CL013
115 914 010	CL012

SKODA	TESLA
6N0 905 104	CL001
SMART	**TESLA**
000 3100 V003	CL607
000 3100 V004	CL607
000 3100 V005	CL607
C 000 3100 V003	CL607
C 000 3100 V004	CL607
C 000 3100 V005	CL607
SMP	**TESLA**
12010	CL228
12101	CL031
12102	CL032
12106	CL033
12107	CL237
12108	CL236
12116	CL911
12127	CL927
12128	CL241
12129	CL155
12130	CL325
12132	CL413
12133	CL932
12141	CL628
12143	CL629
12144	CL931
12149	CL929
12151	CL933
12154	CL244
12156	CL240
12165	CL926
12166	CL242
12167	CL930
12168	CL934
12169	CL157
12170	CL156
12171	CL415
12172	CL414
12175	CL245
12176	CL243
12178	CL627
12182	CL158
12183	CL416
12203	CL206
12300	CL146
12302	CL108
12303	CL114
12304	CL109
12306	CL118
12400	CL584
12401	CL577
12402	CL153
12403	CL594
12404	CL536
12405	CL535
12406	CL566
12408	CL595
12409	CL553
12410	CL580
12413	CL527
12414	CL573
12416	CL558
12417	CL017
12418	CL531
12419	CL590
12420	CL504
12421	CL551
12422	CL545

SMP > TESLA ▶

Ignition coils – cross references
Катушки зажигания – таблицы сравнения
Zapalovací cívky – srovnávací tabulky

SMP	TESLA
12423	CL532
12424	CL591
12426	CL234
12428	CL411
12430	CL920
12431	CL723
12432	CL587
12433	CL720
12437	CL722
12440	CL718
12441	CL596
12446	CL924
12447	CL597
12449	CL589
12450	CL522
12454	CL576
12457	CL593
12458	CL908
12467	CL409
12469	CL721
12473	CL719
12477	CL914
12478	CL913
12481	CL915
12482	CL538
12484	CL617
12486	CL324
12498	CL233
12589	CL128
12596	CL116
12598	CL219
12601	CL304
12604	CL316
12605	CL308
12606	CL004
12607	CL102
12610	CL509
12611	CL559
12613	CL107
12614	CL400
12615	CL543
12616	CL106
12617	CL508
12618	CL500
12619	CL300
12620	CL313
12622	CL601
12623	CL302
12624	CL506
12626	CL205
12635	CL408
12637	CL319
12639	CL609
12646	CL123
12648	CL568
12649	CL513
12651	CL588
12652	CL578
12657	CL716
12659	CL501
12660	CL560
12662	CL122
12667	CL507
12669	CL563
12672	CL907
12678	CL207
12679	CL124

SMP	TESLA
12680	CL125
12681	CL126
12683	CL525
12700	CL312
12701	CL136
12702	CL137
12707	CL700
12709	CL519
12710	CL615
12711	CL100
12712	CL209
12713	CL222
12714	CL401
12715	CL409
12716	CL306
12717	CL305
12719	CL110
12720	CL111
12721	CL214
12722	CL213
12723	CL202
12724	CL203
12725	CL130
12726	CL010
12727	CL003
12728	CL005
12729	CL314
12730	CL315
12731	CL113
12732	CL127
12733	CL014
12734	CL201
12735	CL510
12736	CL604
12737	CL301
12738	CL404
12739	CL711
12740	CL007
12741	CL310
12742	CL204
12743	CL317
12744	CL318
12745	CL307
12747	CL112
12748	CL212
12749	CL104
12750	CL115
12751	CL607
12752	CL710
12753	CL611
12754	CL020
12755	CL132
12756	CL133
12757	CL569
12758	CL602
12759	CL223
12760	CL610
12761	CL215
12762	CL402
12764	CL131
12765	CL140
12766	CL135
12767	CL141
12768	CL605
12769	CL320
12770	CL105
12772	CL403

SMP	TESLA
12773	CL702
12774	CL520
12776	CL008
12777	CL521
12778	CL009
12779	CL211
12782	CL405
12783	CL011
12784	CL224
12785	CL311
12788	CL023
12789	CL309
12790	CL016
12791	CL024
12792	CL034
12793	CL216
12794	CL138
12795	CL139
12796	CL120
12797	CL217
12798	CL511
12799	CL121
12800	CL218
12801	CL600
12802	CL221
12803	CL407
12804	CL230
12805	CL229
12806	CL210
12807	CL406
12808	CL539
12809	CL534
12810	CL533
12811	CL220
12812	CL515
12813	CL526
12814	CL503
12815	CL502
12816	CL523
12817	CL618
12818	CL410
12819	CL542
12820	CL616
12821	CL015
12822	CL708
12823	CL705
12825	CL579
12828	CL570
12829	CL321
12830	CL022
12831	CL226
12832	CL554
12833	CL623
12836	CL706
12837	CL713
12838	CL709
12842	CL712
12843	CL239
12845	CL232
12846	CL603
12847	CL707
12848	CL619
12849	CL235
12850	CL564
12851	CL006
12852	CL625
12855	CL550

SMP	TESLA
12857	CL622
12858	CL151
12860	CL561
12861	CL412
12864	CL572
12865	CL547
12866	CL555
12867	CL592
12868	CL575
12869	CL524
12870	CL917
12871	CL598
12872	CL928
12873	CL599
12874	CL565
12876	CL549
12877	CL557
12878	CL150
12879	CL154
12882	CL152
12883	CL512
12884	CL323
12885	CL546
12886	CL530
12887	CL225
12888	CL541
12889	CL621
12890	CL624
12891	CL548
12892	CL326
12893	CL585
12894	CL586
12895	CL029
12896	CL505
12897	CL556
12898	CL529
12899	CL571
12916	CL001
12917	CL200
12918	CL019
12919	CL002
12921	CL119
12922	CL021
12923	CL030
12924	CL028
SSANG YONG	**TESLA**
00015 87003	CL606
0001587503	CL604
SUBARU	**TESLA**
22433-AA240	CL570
22433-AA370	CL570
22433-AA410	CL591
22433-AA418	CL934
22433-AA41A	CL591
22433-AA41B	CL591
22433-AA441	CL933
22433-AA451	CL917
22433-AA480	CL934
22433-AA531	CL933
22433-AA540	CL934
22433-AA550	CL917
22433-AA570	CL591
22433-AA57A	CL591
22433-AA640	CL934
22443-AA530	CL933
SUZUKI	
33400-50F20	CL923

SUZUKI	TESLA
33400-51K10	CL236
33400-65G00	CL561
33400-65G01	CL561
33400-65G02	CL561
33400-76G00	CL923
33400-76G01	CL923
33400-76G11	CL923
33400-76G20	CL923
33400-76G21	CL923
33400-76G30	CL923
33400-78J02	CL245
33400-81A00	CL923
33410-57B10	CL588
33410-57B10-000	CL588
33410-66D00	CL533
33410-66D01	CL533
33410-66D10	CL533
33410-77E11	CL512
33410-77E20	CL557
33410-77E21	CL557
33410-77E22	CL557
33410-80C10	CL588
TOYOTA	**TESLA**
19500-74040	CL578
19500-74050	CL578
90048-52126	CL922
90080-19005	CL514
90080-19005 00	CL514
90080-19015	CL555
90080-19016	CL571
90080-19017	CL542
90080-19017 00	CL542
90080-19019	CL555
90080-19021	CL520
90080-19023	CL579
90080-19027	CL575
90919-02163	CL568
90919-02164	CL513
90919-02185	CL574
90919-02197	CL578
90919-02208	CL578
90919-02212	CL580
90919-02217	CL919
90919-02218	CL919
90919-02230	CL575
90919-02234	CL571
90919-02237	CL576
90919-02238	CL577
90919-02239	CL555
90919-02240	CL520
90919-02243	CL579
90919-02244	CL579
90919-02246	CL921
90919-02247	CL564
90919-02248	CL564
90919-02250	CL924
90919-02251	CL920
90919-02252	CL581
90919-02256	CL924
90919-A2001	CL564
90919-A2002	CL920
90919-A2004	CL920
90919-A2005	CL924
90919-C2002	CL564
90919-T2002	CL555
90919-T2003	CL520

Ignition coils – cross references
Катушки зажигания – таблицы сравнения
Zapalovací cívky – srovnávací tabulky

VAG	TESLA
021 9051 06B	CL030
0219 05 106C	CL030
04C 905 110B	CL031
04C 905 110D	CL031
04C 905 110H	CL031
04E 905 110	CL031
04E 905 110A	CL031
04E 905 110B	CL031
066 905 100.	CL024
066 905 100B	CL024
066 905 100C	CL024
066 905 100D	CL024
066 905 100G	CL024
06C 905 115 E	CL015
06D 905 115	CL015
06D 905 115A	CL015
06D 905 115C	CL015
06D 905 115D	CL015
06D 905 115F	CL015
06D 905 115K	CL015
06D 905 115L	CL015
06D 9051 15G	CL015
06E 905 115	CL015
06E 905 115 A	CL015
06E 905 115 B	CL015
06E 905 115 C	CL015
06E 905 115 D	CL015
06E 905 115 E	CL015
06F 905 115	CL011
06F 905 115 A	CL011
06F 905 115 B	CL011
06F 905 115 C	CL011
06F 905 115 E	CL011
06F 905 115 F	CL011
06H 905 110D	CL032
06H 905 110E	CL032
06H 905 110F	CL032
06J 905 110C	CL032
06J 905 110D	CL032
06L 905 110C	CL032
06L 905 110D	CL032
077 905 115AA	CL017
077 905 115G	CL017
077 905 115J	CL017
077 905 115M	CL017
077 905 115R	CL017
077 905 115S	CL017
07K 905 715	CL011
07K 905 715 C	CL011
07K 905 715 D	CL011
07K 905 715 F	CL011
J9091902197	CL578

VALEO	TESLA
245001	CL114
245022	CL146
245027	CL108
245038	CL129
245039	CL109
245040	CL107
245041	CL106
245042	CL206
245043	CL205
245046	CL113
245052	CL308
245054	CL118
245057	CL207
245063	CL228

VALEO	TESLA
245064	CL018
245066	CL136
245067	CL137
245076	CL103
245077	CL101
245079	CL131
245080	CL609
245085	CL132
245086	CL127
245087	CL601
245088	CL140
245092	CL001
245093	CL019
245094	CL135
245095	CL104
245096	CL141
245097	CL111
245098	CL112
245099	CL115
245100	CL133
245101	CL138
245102	CL139
245103	CL120
245104	CL100
245105	CL116
245106	CL128
245107	CL102
245108	CL203
245109	CL110
245111	CL300
245115	CL125
245116	CL301
245117	CL310
245118	CL311
245119	CL208
245121	CL702
245122	CL122
245123	CL313
245124	CL304
245127	CL105
245129	CL124
245130	CL700
245134	CL312
245135	CL309
245136	CL008
245137	CL007
245138	CL123
245139	CL401
245141	CL003
245142	CL005
245144	CL219
245146	CL004
245147	CL600
245148	CL302
245149	CL306
245150	CL305
245151	CL213
245152	CL215
245153	CL320
245154	CL202
245155	CL317
245156	CL318
245157	CL307
245158	CL217
245159	CL002
245160	CL400
245162	CL134

VALEO	TESLA
245163	CL009
245164	CL011
245167	CL501
245169	CL604
245169	CL606
245170	CL204
245171	CL611
245174	CL520
245175	CL121
245177	CL561
245178	CL555
245179	CL200
245184	CL406
245312	CL156

VOLVO	TESLA
1275174	CL119
1275602	CL707
1275971	CL719
30684245	CL723
30684245-0	CL723
30713416	CL121
30713417	CL410
30731416	CL403
30731419	CL403
31216444	CL403
31216444 AA	CL403
31316353	CL413
31339210	CL414
31375550	CL414
31422117	CL414
3287677	CL118
32876773	CL118
70863020	CL136
70863020-7	CL136
70863021	CL137
70863021-5	CL137
8677837	CL410
9125601	CL121
9146776	CL719

VW	TESLA
021 905 106	CL021
021 905 106A	CL021
022 905 100B	CL016
022 905 100E	CL016
022 905 100H	CL016
022 905 100L	CL016
022 905 100P	CL016
022 905 100S	CL016
022 905 100T	CL016
022 905 100A	CL023
022 905 100D	CL023
022 905 100G	CL023
022 905 100K	CL023
022 905 100N	CL023
022 905 715	CL016
022 905 715A	CL016
022 905 715B	CL016
022 905 715C	CL023
032 905 106	CL002
032 905 106B	CL002
032 905 106D	CL002
032 905 106E	CL002
034 905 101.	CL033
034 905 105.	CL033
036 905 100A	CL003
036 905 100B	CL003
036 905 100C	CL003

VW	TESLA
036 905 100D	CL003
036 905 715	CL003
036 905 715A	CL003
036 905 715C	CL003
036 905 715E	CL003
036 905 715F	CL003
036 905 715G	CL003
03D 905 115A	CL009
03D 905 115B	CL009
03D 905 115C	CL009
03D 905 115D	CL009
03D 905 115E	CL009
03D 905 115F	CL009
03D 905 115G	CL009
058 905 101	CL004
058 905 101A	CL028
058 905 105	CL004
058 905 105A	CL028
06A 905 097	CL010
06A 905 104	CL010
06A 905 115	CL005
06A 905 115A	CL005
06A 905 115B	CL005
06A 905 115C	CL005
06B 905 105	CL014
06B 905 115	CL014
06B 905 115D	CL005
06B 905 115G	CL005
06B 905 115H	CL005
06B 905 115J	CL005
06B 905 115L	CL005
06B 905 115M	CL005
06B 905 115N	CL005
06B 905 115R	CL005
06B 905 115S	CL005
06B 905 115T	CL005
06B 905 115B	CL014
06B 905 115E	CL014
06C 905 115A	CL034
06C 905 115B	CL034
06C 905 115D	CL034
06C 905 115E	CL034
06C 905 115F	CL034
06C 905 115G	CL034
06C 905 115H	CL034
06C 905 115K	CL034
06C 905 115L	CL034
06C 905 115M	CL034
6N0 905 104	CL001
071 905 106	CL020
077 905 115AB	CL029
077 905 115B	CL029
077 905 115C	CL029
077 905 115E	CL029
077 905 115F	CL029
077 905 115H	CL029
077 905 115K	CL029
077 905 115P	CL029
077 905 115Q	CL029
077 905 115T	CL029
078 905 101	CL006
078 905 101A	CL006
078 905 104	CL006
07C 905 115J	CL022
07C 905 715	CL022
07C 905 715C	CL022
07C 905 715D	CL022

VW	TESLA
07C 905 715E	CL022
07C 905 715F	CL022
07C 905 715H	CL022
191 905 115A	CL018
211 905 115D	CL018
310 880 01	CL021
357 905 104	CL001
701 905 104	CL019
701 905 104A	CL019
811 905 115	CL018
867 905 104A	CL001
867 905 105A	CL019

Ignition coils - index
Катушки зажигания - индекс
Zapalovací cívky - rejstřík

ACURA	CL500
ALFA ROMEO	CL221
	CL226
	CL300
	CL302
	CL305
	CL306
	CL307
	CL309
	CL310
	CL319
	CL320
	CL321
	CL323
	CL324
	CL325
	CL326
AUDI	CL001
	CL002
	CL003
	CL004
	CL005
	CL006
	CL011
	CL014
	CL015
	CL016
	CL017
	CL019
	CL022
	CL026
	CL028
	CL029
	CL031
	CL032
	CL033
	CL034
BMW	CL600
	CL601
	CL602
	CL603
	CL615
	CL619
	CL623
	CL624
	CL626
CADILLAC	CL245
CITROEN	CL104
	CL105
	CL106
	CL107
	CL108
	CL109
	CL110
	CL111
	CL112
	CL113
	CL114
	CL115
	CL120

CITROEN	CL127
	CL129
	CL132
	CL133
	CL135
	CL138
	CL139
	CL140
	CL141
	CL151
	CL156
	CL157
	CL158
	CL302
	CL555
	CL603
	CL927
	CL929
DACIA	CL100
	CL116
	CL117
	CL150
	CL155
DAEWOO	CL201
	CL204
	CL211
	CL216
	CL220
	CL225
	CL231
	CL606
DAIHATSU	CL555
	CL563
	CL587
	CL907
	CL922
FIAT	CL107
	CL112
	CL135
	CL200
	CL221
	CL224
	CL236
	CL300
	CL301
	CL302
	CL303
	CL304
	CL308
	CL309
	CL310
	CL311
	CL312
	CL313
	CL314
	CL315
	CL316
	CL317
	CL318
	CL323

FIAT	CL324
	CL325
	CL326
	CL561
	CL721
FORD	CL021
	CL023
	CL309
	CL400
	CL401
	CL402
	CL403
	CL404
	CL405
	CL406
	CL407
	CL408
	CL409
	CL410
	CL411
	CL412
	CL413
	CL414
	CL415
	CL416
FSO	CL302
GAZ	CL801
GEELY	CL803
HONDA	CL500
	CL501
	CL522
	CL550
	CL556
	CL560
	CL569
	CL583
	CL585
	CL586
	CL596
	CL716
HYUNDAI	CL502
	CL503
	CL508
	CL515
	CL519
	CL523
	CL524
	CL525
	CL526
	CL527
	CL528
	CL532
	CL539
	CL540
	CL541
	CL546
	CL551
	CL552
	CL558
	CL565

HYUNDAI	CL566
	CL584
	CL590
	CL593
	CL595
	CL901
	CL902
	CL903
	CL904
	CL908
	CL909
	CL926
	CL932
CHEVROLET	CL201
	CL216
	CL220
	CL225
	CL233
	CL234
	CL237
	CL238
	CL241
	CL245
CHRYSLER	CL605
	CL706
	CL712
	CL718
	CL720
	CL721
	CL722
INFINITI	CL509
	CL535
	CL536
	CL913
	CL914
	CL916
JAGUAR	CL415
JEEP	CL706
	CL709
	CL712
	CL713
	CL718
KIA	CL302
	CL504
	CL505
	CL515
	CL528
	CL529
	CL530
	CL531
	CL532
	CL541
	CL544
	CL545
	CL546
	CL548
	CL552
	CL553
	CL558
	CL565

KIA	CL566
	CL584
	CL589
	CL590
	CL593
	CL595
	CL901
	CL902
	CL903
	CL904
	CL908
	CL926
	CL932
LADA (VAZ)	CL100
	CL116
	CL800
	CL801
	CL802
LANCIA	CL107
	CL135
	CL300
	CL302
	CL303
	CL304
	CL308
	CL309
	CL310
	CL312
	CL313
	CL314
	CL315
	CL317
	CL318
	CL320
	CL323
	CL325
	CL326
LANDROVER	CL302
	CL415
	CL600
	CL702
	CL711
	CL723
LEXUS	CL571
	CL574
	CL575
	CL578
	CL920
	CL921
	CL924
MAZDA	CL400
	CL401
	CL403
	CL405
	CL506
	CL507
	CL559
	CL572
	CL573
	CL594

Ignition coils - index
Катушки зажигания - индекс
Zapalovací cívky - rejstřík

MAZDA	CL599
	CL905
	CL906
	CL910
MERCEDES	CL021
	CL604
	CL605
	CL606
	CL609
	CL610
	CL611
	CL612
	CL613
	CL614
	CL616
	CL617
	CL618
	CL621
	CL622
	CL627
	CL628
	CL629
MG	CL700
	CL702
	CL708
	CL711
MINI	CL603
	CL626
	CL706
MITSUBISHI	CL502
	CL508
	CL525
	CL526
	CL532
	CL543
	CL547
	CL549
	CL558
	CL562
	CL582
	CL597
	CL598
	CL907
	CL925
	CL927
	CL928
	CL929
	CL930
	CL931
NISSAN	CL100
	CL116
	CL509
	CL510
	CL511
	CL521
	CL534
	CL535
	CL536
	CL537
	CL538

NISSAN	CL554
	CL558
	CL592
	CL900
	CL911
	CL912
	CL913
	CL914
	CL915
OPEL (VAUXHALL)	CL100
	CL200
	CL201
	CL202
	CL203
	CL205
	CL206
	CL207
	CL208
	CL209
	CL210
	CL212
	CL213
	CL214
	CL215
	CL217
	CL218
	CL219
	CL220
	CL221
	CL222
	CL223
	CL224
	CL226
	CL228
	CL229
	CL230
	CL232
	CL233
	CL235
	CL236
	CL237
	CL238
	CL239
	CL240
	CL242
	CL243
	CL244
	CL245
PEUGEOT	CL104
	CL105
	CL106
	CL107
	CL108
	CL109
	CL110
	CL111
	CL112
	CL113
	CL114
	CL115

PEUGEOT	CL120
	CL127
	CL129
	CL132
	CL133
	CL135
	CL138
	CL139
	CL140
	CL141
	CL151
	CL154
	CL156
	CL157
	CL158
	CL302
	CL555
	CL603
	CL927
PORSCHE	CL016
	CL032
	CL620
	CL625
PROTON	CL302
RENAULT	CL100
	CL101
	CL102
	CL103
	CL116
	CL118
	CL119
	CL122
	CL123
	CL124
	CL125
	CL126
	CL128
	CL130
	CL131
	CL134
	CL135
	CL136
	CL137
	CL140
	CL146
	CL149
	CL150
	CL152
	CL153
	CL155
	CL900
ROVER	CL106
	CL500
	CL501
	CL569
	CL600
	CL700
	CL702
	CL708
	CL711

ROVER	CL716
SAAB	CL203
	CL208
	CL210
	CL235
	CL237
	CL239
	CL245
	CL705
	CL710
SEAT	CL001
	CL002
	CL003
	CL004
	CL005
	CL007
	CL009
	CL011
	CL018
	CL019
	CL020
	CL023
	CL030
	CL031
	CL032
SKODA	CL001
	CL002
	CL003
	CL004
	CL005
	CL006
	CL007
	CL008
	CL009
	CL010
	CL011
	CL012
	CL013
	CL016
	CL031
	CL032
SMART	CL597
	CL607
SSANG YONG	CL606
SUBARU	CL555
	CL561
	CL570
	CL591
	CL917
	CL933
	CL934
SUZUKI	CL236
	CL245
	CL512
	CL533
	CL557
	CL559
	CL561
	CL588
	CL923

TAGAZ	CL606
TOYOTA	CL513
	CL514
	CL520
	CL542
	CL555
	CL564
	CL568
	CL571
	CL574
	CL575
	CL576
	CL577
	CL578
	CL579
	CL580
	CL581
	CL919
	CL924
VOLVO	CL118
	CL119
	CL121
	CL136
	CL137
	CL403
	CL405
	CL410
	CL413
	CL707
	CL719
	CL723
VW	CL001
	CL002
	CL003
	CL004
	CL005
	CL006
	CL007
	CL009
	CL010
	CL011
	CL014
	CL015
	CL016
	CL017
	CL018
	CL019
	CL020
	CL021
	CL022
	CL023
	CL024
	CL028
	CL030
	CL031
	CL032
	CL578
	CL604
ZAZ	CL201

Ignition coils - packing
Катушки зажигания - упаковка
Zapalovací cívky - balení

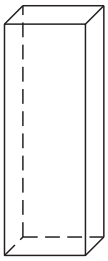

Box 1: 70x45x200 mm

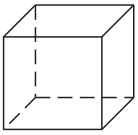

Box 2: 85x78x80 mm

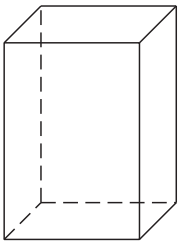

Box 3: 117x90x170 mm

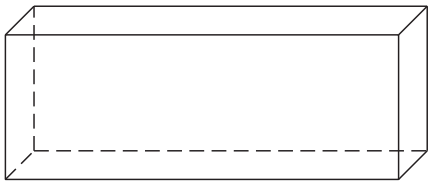

Box 4: 340x70x125 mm

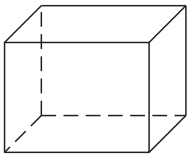

Box 5: 125x90x95 mm

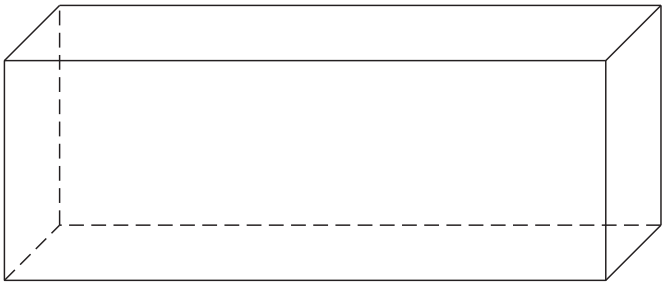

Box 6: 520x135x190 mm

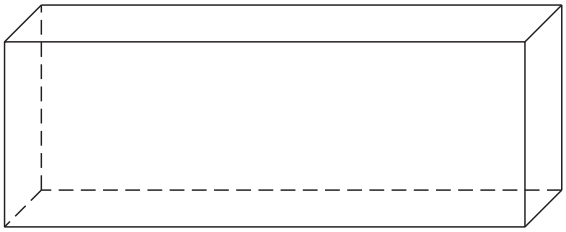

Box 7: 450x90x160 mm

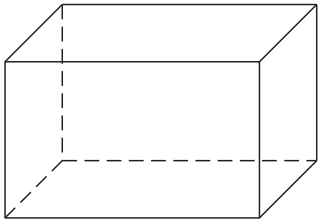

Box 8: 220x140x135 mm

CL001	Box 2	CL021	Box 3	CL108	Box 5	CL128	Box 2	CL154	Box 4
CL002	Box 5	CL022	Box 1	CL109	Box 5	CL129	Box 5	CL155	Box 3
CL003	Box 1	CL023	Box 1	CL110	Box 4	CL130	Box 8	CL156	Box 7
CL004	Box 3	CL024	Box 1	CL111	Box 4	CL131	Box 5	CL157	Box 3
CL005	Box 1	CL026	Box 8	CL112	Box 7	CL132	Box 5	CL158	Box 3
CL006	Box 8	CL028	Box 3	CL113	Box 6	CL133	Box 7	CL200	Box 3
CL007	Box 4	CL029	Box 1	CL114	Box 5	CL134	Box 8	CL201	Box 5
CL008	Box 4	CL030	Box 8	CL115	Box 6	CL135	Box 5	CL202	Box 7
CL009	Box 1	CL031	Box 3	CL116	Box 5	CL136	Box 2	CL203	Box 7
CL010	Box 3	CL032	Box 3	CL117	Box 3	CL137	Box 2	CL204	Box 5
CL011	Box 1	CL033	Box 3	CL118	Box 5	CL138	Box 7	CL205	Box 5
CL012	Box 3	CL034	Box 1	CL119	Box 3	CL139	Box 7	CL206	Box 5
CL013	Box 3	CL100	Box 1	CL120	Box 7	CL140	Box 7	CL207	Box 5
CL014	Box 3	CL101	Box 2	CL121	Box 5	CL141	Box 7	CL208	Box 3
CL015	Box 1	CL102	Box 2	CL122	Box 3	CL146	Box 5	CL209	Box 3
CL016	Box 1	CL103	Box 2	CL123	Box 2	CL149	Box 8	CL210	Box 3
CL017	Box 1	CL104	Box 7	CL124	Box 2	CL150	Box 5	CL211	Box 5
CL018	Box 5	CL105	Box 1	CL125	Box 2	CL151	Box 7	CL212	Box 5
CL019	Box 2	CL106	Box 5	CL126	Box 2	CL152	Box 3	CL213	Box 4
CL020	Box 8	CL107	Box 5	CL127	Box 7	CL153	Box 3	CL214	Box 4

Ignition coils - packing
Катушки зажигания - упаковка
Zapalovací cívky - balení

CL215	Box 4
CL216	Box 3
CL217	Box 4
CL218	Box 7
CL219	Box 5
CL220	Box 5
CL221	Box 7
CL222	Box 3
CL223	Box 7
CL224	Box 7
CL225	Box 3
CL226	Box 7
CL228	Box 5
CL229	Box 4
CL230	Box 4
CL231	Box 5
CL232	Box 4
CL233	Box 7
CL234	Box 1
CL235	Box 3
CL236	Box 1
CL237	Box 3
CL238	Box 4
CL239	Box 3
CL240	Box 3
CL241	Box 7
CL242	Box 7
CL243	Box 3
CL244	Box 7
CL245	Box 3
CL300	Box 2
CL301	Box 1
CL302	Box 5
CL303	Box 5
CL304	Box 5
CL305	Box 2
CL306	Box 2
CL307	Box 2
CL308	Box 5
CL309	Box 4
CL310	Box 1
CL311	Box 1
CL312	Box 3
CL313	Box 5
CL314	Box 1
CL315	Box 3
CL316	Box 3
CL317	Box 3
CL318	Box 3
CL319	Box 5
CL320	Box 3
CL321	Box 1

CL323	Box 3
CL324	Box 1
CL325	Box 3
CL326	Box 3
CL400	Box 5
CL401	Box 5
CL402	Box 5
CL403	Box 5
CL404	Box 3
CL405	Box 1
CL406	Box 5
CL407	Box 3
CL408	Box 3
CL409	Box 5
CL410	Box 5
CL411	Box 3
CL412	Box 1
CL413	Box 3
CL414	Box 5
CL415	Box 3
CL416	Box 3
CL500	Box 2
CL501	Box 2
CL502	Box 3
CL503	Box 8
CL504	Box 5
CL505	Box 3
CL506	Box 5
CL507	Box 5
CL508	Box 5
CL509	Box 5
CL510	Box 3
CL511	Box 3
CL512	Box 1
CL513	Box 2
CL514	Box 5
CL515	Box 3
CL519	Box 4
CL520	Box 1
CL521	Box 3
CL522	Box 3
CL523	Box 8
CL524	Box 8
CL525	Box 3
CL526	Box 8
CL527	Box 7
CL528	Box 8
CL529	Box 8
CL530	Box 8
CL531	Box 4
CL532	Box 8
CL533	Box 3

CL534	Box 3
CL535	Box 4
CL536	Box 3
CL537	Box 1
CL538	Box 3
CL539	Box 8
CL540	Box 3
CL541	Box 8
CL542	Box 3
CL543	Box 2
CL544	Box 5
CL545	Box 8
CL546	Box 8
CL547	Box 3
CL548	Box 3
CL549	Box 4
CL550	Box 3
CL551	Box 8
CL552	Box 3
CL553	Box 3
CL554	Box 3
CL555	Box 1
CL556	Box 1
CL557	Box 3
CL558	Box 5
CL559	Box 5
CL560	Box 2
CL561	Box 3
CL562	Box 2
CL563	Box 5
CL564	Box 1
CL565	Box 8
CL566	Box 1
CL568	Box 2
CL569	Box 2
CL570	Box 5
CL571	Box 3
CL572	Box 3
CL573	Box 8
CL574	Box 5
CL575	Box 3
CL576	Box 3
CL577	Box 3
CL578	Box 5
CL579	Box 3
CL580	Box 3
CL581	Box 1
CL582	Box 3
CL583	Box 3
CL584	Box 1
CL585	Box 3
CL586	Box 3

CL587	Box 3
CL588	Box 2
CL589	Box 3
CL590	Box 1
CL591	Box 3
CL592	Box 3
CL593	Box 1
CL594	Box 3
CL595	Box 1
CL596	Box 5
CL597	Box 1
CL598	Box 2
CL599	Box 3
CL600	Box 3
CL601	Box 3
CL602	Box 1
CL603	Box 1
CL604	Box 3
CL605	Box 2
CL606	Box 2
CL607	Box 5
CL609	Box 5
CL610	Box 7
CL611	Box 3
CL612	Box 5
CL613	Box 5
CL614	Box 5
CL615	Box 4
CL616	Box 3
CL617	Box 2
CL618	Box 3
CL619	Box 1
CL620	Box 1
CL621	Box 3
CL622	Box 3
CL623	Box 1
CL624	Box 1
CL625	Box 3
CL626	Box 3
CL627	Box 3
CL628	Box 2
CL629	Box 3
CL700	Box 3
CL702	Box 1
CL705	Box 6
CL706	Box 3
CL707	Box 5
CL708	Box 3
CL709	Box 1
CL710	Box 6
CL711	Box 3
CL712	Box 2

CL713	Box 2
CL716	Box 5
CL718	Box 3
CL719	Box 5
CL720	Box 3
CL721	Box 1
CL722	Box 3
CL723	Box 3
CL800	Box 1
CL801	Box 3
CL802	Box 5
CL803	Box 5
CL900	Box 3
CL901	Box 8
CL902	Box 1
CL903	Box 5
CL904	Box 1
CL905	Box 3
CL906	Box 5
CL907	Box 5
CL908	Box 1
CL909	Box 1
CL910	Box 3
CL911	Box 3
CL912	Box 3
CL913	Box 3
CL914	Box 3
CL915	Box 3
CL916	Box 3
CL917	Box 5
CL919	Box 2
CL920	Box 1
CL921	Box 3
CL922	Box 1
CL923	Box 1
CL924	Box 3
CL925	Box 5
CL926	Box 1
CL927	Box 3
CL928	Box 2
CL929	Box 3
CL930	Box 1
CL931	Box 3
CL932	Box 7
CL933	Box 5
CL934	Box 5

semidirect ignition T565B + CL711

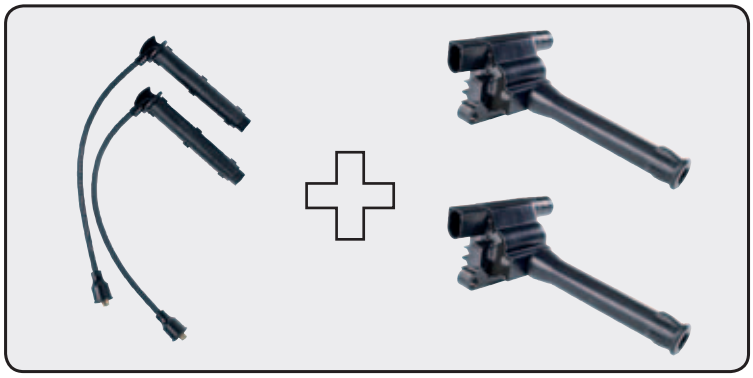

ignition lead set комплект проводов зажигания sada zapalovacích kabelů	ignition coils катушки зажигания zapalovací cívky	
T100C	CL307	
T108B	CL548	
T186B	CL553	
T238P	CL552	
T247P	CL594	
T248P	CL572	
T295P	CL582	
T365C	-	
T382B	CL707	
T471G	CL404	
T508B	CL505	CL589
T533P	CL547	
T537P	-	
T539P	CL931	
T565B	CL708	CL711
T587P	CL580	
T594C	CL028	
T088B	CL028	
T599C	CL305	CL306
T623C	CL604	CL606
T624C	CL604	CL606
T743C	CL606	
T745B	CL515	
T967B	CL533	CL561
T982C	CL604	CL606
T010B	CL604	CL606
T994B	CL561	

sets and coils are delivered as different articles / комплектов проводов зажигания и катушек зажигания надо заказывать отдельно / sady a cívky se objednávají jako samostatné položky

Automotive bulbs
Автомобильные лампы
Automobilové žárovky

Automotive fuses
Автомобильные предохранители
Automobilové pojistky

Ignition lead sets
Комплекты проводов зажигания
Sady zapalovacích kabelů

Contacts:
TESLA BLATNÁ, a.s.
Palackého 644
388 15 Blatná
Czech Republic

E-mail: sales@tesla-blatna.cz
http://www.tesla-blatna.cz

Phone: +420 383 415 354
Telefax: +420 383 415 300

Контакты:
TESLA BLATNÁ, a.s.
Palackého 644
388 15 Blatná
Czech Republic

E-mail: sales@tesla-blatna.cz
http://www.tesla-blatna.cz

Тел: +420 383 415 354
Факс: +420 383 415 300

Kontakt:
TESLA BLATNÁ, a.s.
Palackého 644
388 15 Blatná

Prodej:
Telefon: 383 415 337
Telefax: 383 415 215

E-mail: prodej@tesla-blatna.cz
www.tesla-blatna.cz

Information included in this catalogue are up-to-date at the time of publication.
TESLA BLATNÁ, a.s. reserves the right to change the construction or design of the product without notice.

TESLA BLATNÁ, a.s. оставляет за собой право на изменение конструкции и дизайна указаных изделий.
Информации показаные в этом каталоге действуют в период его издания.

Výrobce si vyhrazuje právo změn v rámci technických zlepšení výrobků.
Informace udané v tomto katalogu jsou platné v době jeho vydání.

1st edition: 06 - 2016
1. издание: 06 - 2016
1. vydání katalogu: 06 – 2016

Art. : 49010088

2017 - 2018

ZAPALOVACÍ CÍVKY

IGNITION COILS

КАТУШКИ ЗАЖИГАНИЯ

ZÜNDSPULEN

BOBINES D'ALLUMAGE

BOBINAS DE ENCENDIDO

BOBINE ACCENSIONE

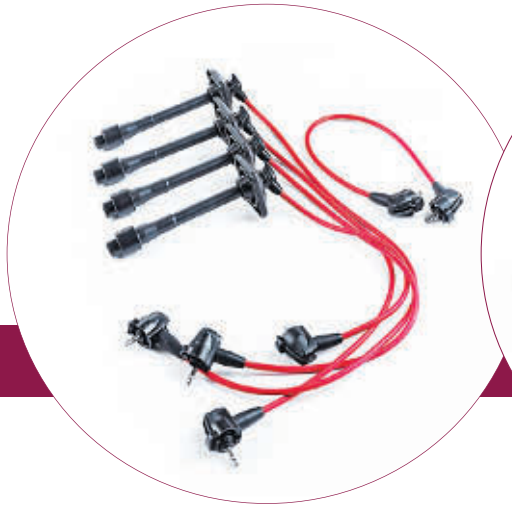

www.tesla-blatna.cz

TecDoc

2017 - 2018

ZAPALOVACÍ CÍVKY

IGNITION COILS

КАТУШКИ ЗАЖИГАНИЯ

ZÜNDSPULEN

BOBINES D'ALLUMAGE

BOBINAS DE ENCENDIDO

BOBINE ACCENSIONE

www.tesla-blatna.cz

TESLA | trusted by generations

TESLA BLATNÁ, a.s., Palackého 644, 388 15 Blatná, Czech Republic
e-mail: sales@tesla-blatna.cz, phone: +420 383 415 354, telefax: +420 383 415 300
www.tesla-blatna.cz